

Pauli International
Member of Pauli + Sohn GmbH group

world of showers

complete hardware range

Pauli + Sohn GmbH
All images, technical drawings and descriptions are copyrighted property of the Pauli + Sohn GmbH technical measurements within the catalog are not binding; subject to change. Any liability for printing errors which have occured during the preparatin of this brochure is excluded.

www.pauli.de **stand:** July 2026

Pauli + Sohn

world of showers

complete hardware range

content

general information

introduction 6
new products in overview 8
colors and finishing 12
RAL quality mark 16
training and showrooms 674
shower-configurator 672

installation situations

niche showers 20
corner showers 22
pentagonal and round showers 26
u-showers 28
bath tub solutions 30

swing door hinges

PONTERE+ 38
PONTERE+ angle brackets 72
FLAMEA pro 82
FLAMEA+ 100
FLAMEA+ angle brackets 126
FARDELLO 138
FLAMEA pro mini 156
FLAMEA 170
PAVONE flush with lifting function 178
PAVONE angle brackets 200
TURA pro heavy duty swing door hinge 204

Anschlagtürbänder

TURA heavy-duty hinges 226
TURA angle brackets 246
FARFALLA 250
FARFALLA angle brackets 260
FLINTER pro 264
FLINTER 288
NIVELLO+ – flush glass mounting with lifting function 302
NIVELLO+ angle brackets 316
NIVELLO – glass mount with counter plate with lifting function 320
FLUTURE – overlapping 338
angle brackets for FLAMEA, FARDELLO, FLINTER, NIVELLO und FLUTURE 346

sauna hinges

PONTERE+ sauna hinges and angle brackets 362
FLAMEA pro sauna hinges and angle brackets 380
FLAMEA+ sauna hinges and angle brackets 392
TURA sauna hinges and angle brackets 406

EVERYSPACE sliding door shower system

- EVERYSPACE - technical details 424
- EVERYSPACE - installation situations 430
- EVERYSPACE - Sets (104/209) 434
- EVERYSPACE - accessories 446

Stainless steel sliding door shower system

- VIVERE II 456
- VIVERE II installation situations 460
- VIVERE II Sets 462
- VIVERE II individual parts 469

profiles

- profile for dry glazing 485
- U-profiles 488
- clamping profile 494

WALK-IN

- WALK-IN product overview 496
- WALK-IN installation situations 500
- WALK-IN system profil 502
- WALK-IN with bars 510
- WALK-IN floor-ceiling tensioner 516

accessories

- handles 520
- towel rack 552
- stabilization 564
- overpressure protection/door stopper 622
- sealing profiles 630
- glass door bolt/floor anchor 654
- glass panes 658
- other 662



shower fixtures from Pauli + Sohn **manufactured** in **Germany**

SUSTAINABLE production

raw materials RECYCLED

Pauli + Sohn is a second-generation, owner-managed family business based in the Oberbergisches Land region of Germany, specialising in the development and manufacture of high-quality fittings for glass constructions. With passion, precision and a flair for design, we create solutions that perfectly combine functionality and aesthetics.

Progress and customer focus are at the heart of everything we do. Through continuous development, state-of-the-art manufacturing technologies and the highest quality standards, we create products that impress in every respect.

Our shower fittings stand for durability and sustainability – made from exclusive materials, processed with special care and assembled by hand. The result is quality that you can not only see, but also feel.

We also set standards in terms of environmental awareness:
production waste is recycled, and process water is treated and reused in our own filter system. We use the heat generated to heat our production halls, while photovoltaic modules on the roofs generate additional energy. In this way, we combine economic action with ecological responsibility – for a sustainable future 'Made in Germany'.



- highest demands on quality
- latest production technologies
- innovative development department
- solutions for every requirement
- sustainable corporate philosophy



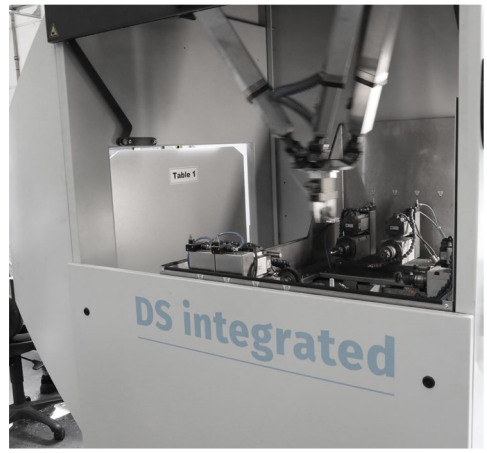

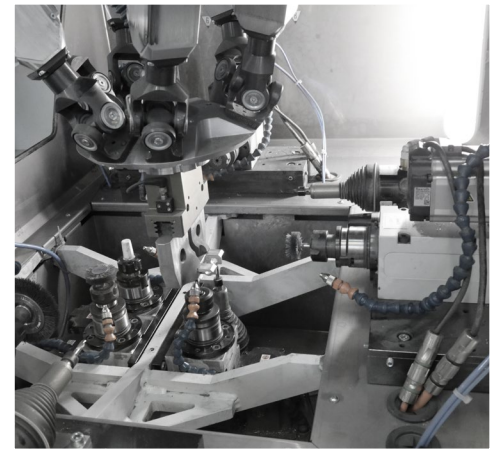

shower hinges and -systems comparison

Planning and application notes:

The hinges must not be used in rooms with high chlorine and alkali content, as this will cause lasting damage to the surfaces and mechanics. When planning for swimming pools, saunas, wellness areas or in the vicinity of saltwater pools, steam showers, etc., please contact our application technology department before implementation.

	NEW  PONTERE+ page 38	NEW  FLAMEA pro page 82	 FLAMEA+ page 100	 FARDELLO page 138	NEW  FLAMEA pro mini page 156	 FLAMEA page 170
base material	ZAMAK®	ZAMAK®	ZAMAK®	ZAMAK®	ZAMAK®	ZAMAK®
load capicity of two hinges	50 kg *2	47 kg	45 kg *3	42 kg	38 kg	36 kg
maximum door width *1	1000 mm	1000 mm	1000 mm	1000 mm	900 mm	900 mm
lifting function						
swing door	✓	✓	✓	✓	✓	✓
striker door						
overlapping door						
sliding door						
suitable for sauna applications						
seal without notching						
installation without seal possible	✓	✓	✓	✓	✓	✓
adjustable closed position	✓	✓	✓	✓	✓	✓
self-closing during the final cm	✓	✓	✓	✓	✓	✓
concealed wall mount	✓	✓	✓	✓	✓	✓
concealed screws	✓	✓	✓	✓	✓	
flush screws						
wall mount with oblong holes	✓	✓	✓	✓	✓	✓
adjustable angle bracket	✓	✓	✓	✓	✓	✓
shower sets with curved glass doors possible						

*1 = with a door height of 2000 mm with 8 mm glass

*2 = except 8307MS (35 kg with 2 straps)

*3 = except 8133ZN (40 kg with 2 belts/max. TF width: 900 mm)

	NEW			NEW				
								
PAVONE page 178	**TURA** pro page 204	**TURA** page 226	**FARFALLA** page 250	**FLINTER** pro page 264	**FLINTER** page 288	**NIVELLO+** page 302	**NIVELLO** page 320	**FLUTURE** page 338
ZAMAK®	ZAMAK®	ZAMAK®	ZAMAK®	ZAMAK®	ZAMAK®	ZAMAK®	ZAMAK®	ZAMAK®
36 kg *4	70 kg	70 kg	40 kg	38 kg	36 kg	36 kg	36 kg	36 kg
900 mm	1200 mm	1200 mm	1000 mm	900 mm	900 mm	900 mm	900 mm	900 mm
✓						✓	✓	
✓	✓							
		✓	✓	✓	✓	✓	✓	✓
								✓
		✓	✓	✓ *5	✓	✓	✓	
✓	✓							✓ *6
✓	✓	✓		✓		✓	✓	✓
✓	✓	✓		✓	✓	✓	✓	✓
✓	✓	✓	✓	✓	✓	✓	✓	
✓	✓	✓	✓	✓	✓	✓	✓	
✓						✓		
✓	✓	✓	✓	✓	✓	✓	✓	
				✓	✓		✓	✓
	✓	✓	✓	✓	✓	✓	✓	✓

*4 = except 8393ZN-L/R (30 kg with 2 belts/max. TF width: 750 mm)
*5 = except 8350ZN
*6 = with stopper

the durability of the hardware was tested in our factory according to DIN EN 14428:2015/A1:2018 5.5 and TR24.

shower hinges and -systems comparison

The hinges must not be used in rooms with high levels of chlorine and alkali, as this will cause lasting damage to the surfaces and the mechanical components. If you intend to use our shower fittings in swimming pool and sauna areas, or in the vicinity of saltwater pools and steam saunas, please contact our technical support team before installation.

	NEW	NEW		
				
	PONTERE+ SN page 362	**FLAMEA** pro **SN** page 380	**FLAMEA+ SN** page 392	**TURA SN** page 406
base material	ZAMAK®	ZAMAK®	ZAMAK®	ZAMAK®
load capicity of two hinges	36 kg	34 kg	30–36 kg	50 kg
maximum door width *1	900 mm	850 mm	750-900 mm	1200 mm
lifting function				
swing door	✓	✓	✓	
striker door				✓
overlapping door				
sliding door				
suitable for sauna applications	✓	✓	✓	✓
seal without notching				✓
installation without seal possible	✓	✓	✓	
adjustable closed position	✓	✓	✓	
self-closing during the final cm	✓	✓	✓	✓
concealed wall mount	✓	✓	✓	✓
concealed screws	✓	✓	✓	✓
flush screws				
wall mount with oblong holes	✓	✓	✓	✓
adjustable angle bracket				
shower sets with curved glass doors possible				✓

*1= with a door height of 2000 mm and 8 mm glass

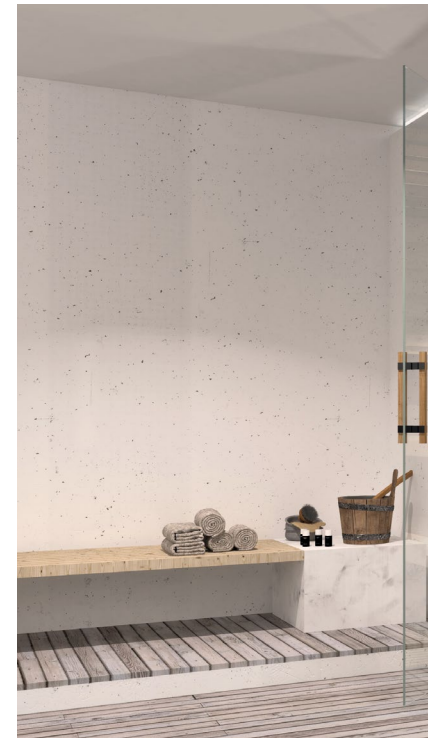



GENERAL





	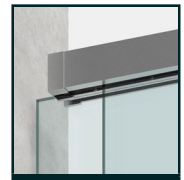 EVERYSPACE page 424	 VIVERE page 456
base material	ZAMAK® / Aluminium	Edelstahl
load capicity of two hinges	32/60 kg	40 kg
maximum door width *1	1000 mm	1000 mm
lifting function		
swing door		
striker door		
overlapping door		
sliding door	✓	✓
suitable for sauna applications		
seal without notching		
installation without seal possible	✓	
adjustable closed position		
self-closing during the final cm	✓	
concealed wall mount	✓	
concealed screws	✓	
flush screws		✓ *7
wall mount with oblong holes		✓
adjustable angle bracket	✓	
shower sets with curved glass doors possible		✓

*1= with a door height of 2000 mm and 8 mm glass

*7 = only wall mount

as you desire – premium surfaces and colors

MADE IN GERMANY

Would you like something a little different? In addition to classic stainless steel and chrome, we offer a selection of stylish, trendy colours and elegant finishes for our fittings: gold look, gold bronze, copper look, graphite metal look, and matt white or black. The Flamea+ Linea series impresses with its exceptional functionality and timeless design. And if you are looking for something special, you will find that certain something in our special colours – such as copper, bronze or rose gold. Our insider tip for anyone who wants more than standard chrome.

standard colors



ZN5
gloss chrome



ZN1
matt chrome



ZN10
gloss nickel

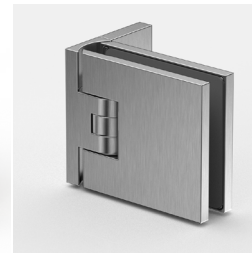

ZNPVD22
stainless steel optic



ZNPVD20
gold optic

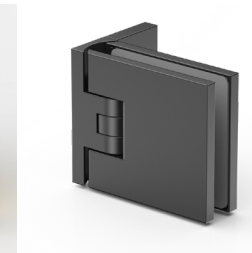

ZNPVD35
black matt



ZN135
deep black matt

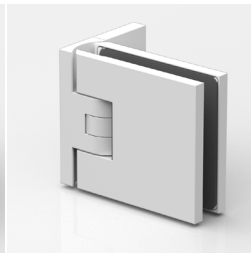

ZN134
white matt

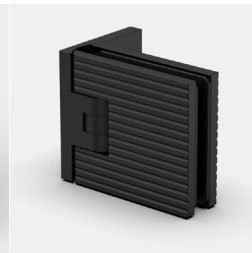

ZN135M1
deep black matt
(FLAMEA+ LINEA)



ZN5M1
gloss chrome
(FLAMEA+ LINEA)

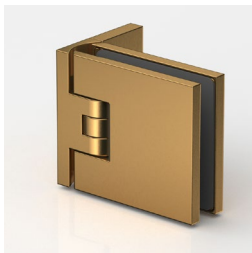

ZNPVD39
gold bronze brushed



ZNPVD40
gold optic brushed

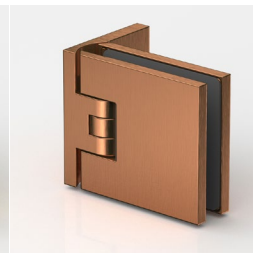

ZNPVD41
copper optic brushed



ZNPVD42
graphite metal
optic brushed

as you desire – premium surfaces and colors

MADE IN GERMANY

Special colours on request



gloss rosé gold



gloss bronze

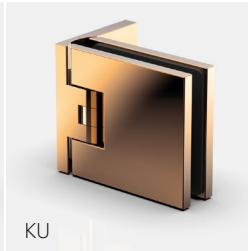

gloss copper



matt rosé gold



matt bronze



matt copper



C114 Sample panel with standard surfaces



C113 Sample fans on both sides with all standard surfaces

surface color equivalents

	Pauli & Sohn		RAL	Dornbracht	Gessi	Vola
	ZN10	gloss nickel		SN / platin Dornbracht 08 / Jado		
	ZNPVD20	gold optic				
	ZNPVD22	stainless steel optic		SNM / platin matt Dornbracht 06		
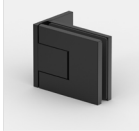	ZNPVD35	black matt				
	ZNPVD39	gold bronce brushed		MM / messing-matt gebürstet Dornbracht 28**		
	ZNPVD40	gold optic brushed				
	ZNPVD41	copper optic brushed			GKG Kupfer gebürstet Gessi 708**	VBC/brushed copper Vola 64**
	ZNPVD42	graphite-metal optic brushed				
	ZN134	white matt	weiß matt lackiert (RAL 9016)	DW / weiß-matt Dornbracht 10		
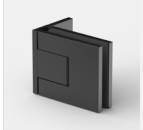	ZN135	deep black matt	schwarz matt lackiert (RAL9011 matt)	DS / schwarz-matt Dornbracht		DS / schwarz-matt, Vola

slight colour variations may occur during PVD coating due to production factors.

surface color equivalents

	Jado	R&R	Grohe	Hansgrohe	Axor	FSB	Christina
				PN / polished nickel Hansgrohe 830		FSB 42 Messing poliert lackiert FSB 6210 Edelstahl messingfarbig	
			Cool Sunrice**	HGO / polished gold optic Hansgrohe 990			
	BN / matt-nickel Jado	SL / steel/ Edelstahl-matt	MTN / brushed nickel Grohe EN SSL / supersteel Grohe DC	MN / brushed nickel Hansgrohe 820	stainless steel optic 800	6204 / Edelstahl feinmatt	
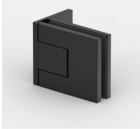		antique Roos&Roos					
		BCS / brushed cool sunrise Grohe GN					
		BR / bronziert** HBR	Grohe BRUSHED COOL SUNRISE	HBR / brushed brass Hansgrohe 950 HBO / brushed gold optic Hansgrohe 250	brushed brass 950		
		BWS / brushed warm sunset Grohe DL VBC**	Grohe Brushed Warm Sunset	BZ / brushed bronze Hansgrohe 140	brushed bronze 140**		
		BC	Grohe Brushed Hard Graphite	BC / brushed black chrome Hansgrohe 340			CBC / Chrom schwarz gebürstet
					Matt White 700	8220 / weiß, close to RAL 9016	
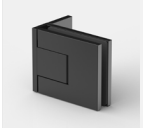					Matt Black 670**		

Note: Manufacturer specifications marked with ** are reproduced in the same way as the colour codes.
If you require other colours, please provide us with the tap manufacturer and the colour code of the tap.

RAL quality mark – Product award for top German quality

MADE IN GERMANY

RAL GÜTEZEICHEN

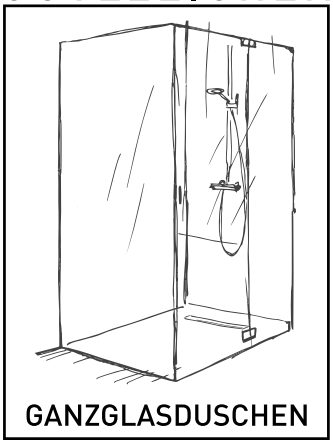

components

RAL -GZ 657

The RAL quality mark is a visible promise of tested top quality. Only products and services that meet strict criteria and satisfy the highest standards bear this mark.

RAL QUALITY ASSURANCE: independently and transparently tested quality

The quality assurance of the RAL quality mark for all-glass showers stands for independent, transparent and publicly recognised quality control. Unlike standards defined purely by industry, this quality mark guarantees voluntary and neutral testing – for quality that consumers and partners alike can trust.

RAL QUALITY ASSOCIATION: for outstanding safety and reliability above the market average

Building and renovating in Germany means complying with numerous regulations and DIN standards. Although these rules provide an important foundation, true quality goes beyond that – and this is precisely where the quality association comes in: the RAL quality mark stands for higher standards, safety and tested reliability far beyond the legal requirements.

Further information on RAL GZ657 'All-glass showers' can be found at www.ral-duschen.de.



RAL quality mark

MADE IN GERMANY

RAL QUALITY ASSURANCE: Product certification for top German quality

Those who choose the RAL quality mark are placing their trust in reliability, safety and quality that far exceed the minimum standard.

PAULI CLOUD

PONTERE+



FLAMEA pro



FLAMEA+



FARDELLO



FLAMEA pro mini



FLAMEA



PAVONE



TURA



FARFALLA



FLINTER pro



FLINTER



NIVELLO+



NIVELLO



FLUTURE



EVERYSPACE



VIVERE





overview installation situation

Choosing the optimal fitting system for each installation situation is an important basis for customer satisfaction. The following overview will help you make your selection. In addition, our shower fitting system experts are always available to provide you with advice and assistance. You can also find many set combinations at www.duschenplaner.de.



General notes

MADE IN GERMANY

Our installation examples serve for orientation and planning and are not to be understood as complete sets. You can design each type individually and customized to your specifications.

When planning and selecting the installation situations, please note the structural requirements and assess the premises precisely. Depending on the application example, the number and arrangement of the stabilizing bars and doorstops may vary.
For detailed information please refer to our measurement sheets on the Internet. Our technical team would be glad to assist you.

Important:

1. shower enclosures must be installed securely and stable.
2. the stabilization depends on the structural situation and the division of the shower enclosure.
3. side panels on which doors are mounted must generally be stabilized.

standard shower sizes:

our situations fit all common standard sizes –
e.g. 900 x 900 x 2000 cm

installation situations legend

(A)	opening outwards
(P)	swing door
(F)	folding system
(LA)	hardware mounted on the left, opening outwards
(RA)	hinge mounted on the right, opening outwards
	combination FLAMEA pro / FLINTER
	combination FLAMEA^{+} / FLINTER
	combination PONTERE^{+} / FLINTER pro
	combination FLAMEA / FLINTER
	combination FARDELLO / FLINTER
	combination FLAMEA pro mini / FLINTER

type **niche showers**

MADE IN GERMANY

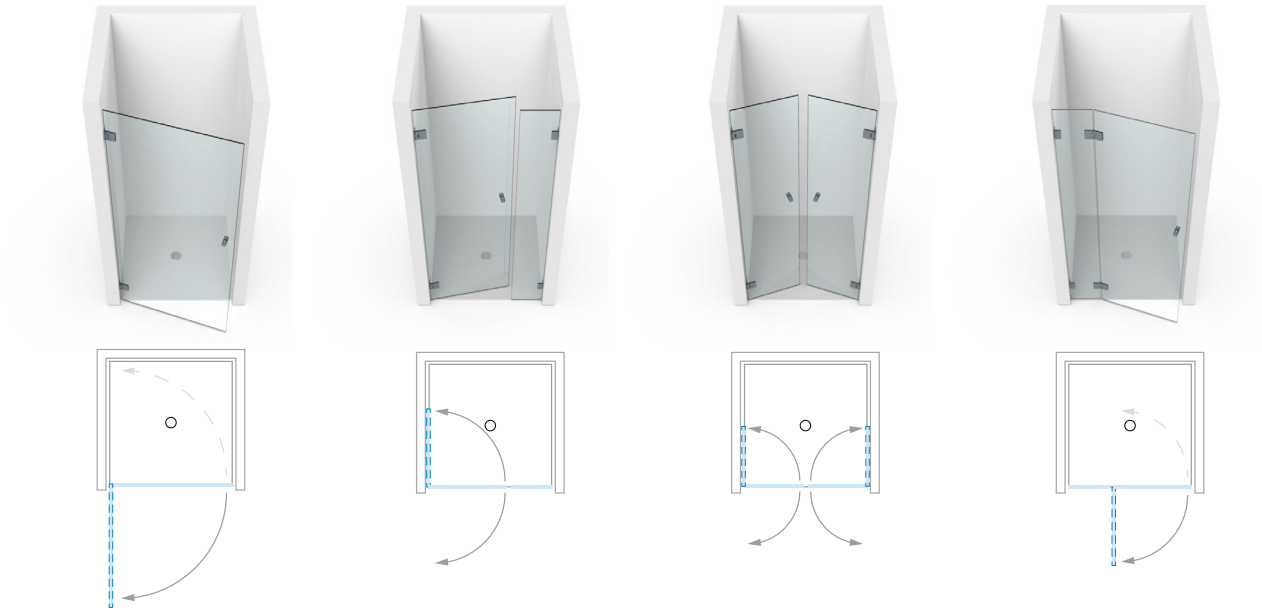

PONTERE+	101 (P)	102 (P)	103 (P)	104 (P)
FLAMEA pro	101 (P)	102 (P)	103 (P)	104 (P)
FLAMEA+	101 (P)	102 (P)	103 (P)	104 (P)
FARDELLO	101 (P)	102 (P)	103 (P)	104 (P)
FLAMEA pro mini	101 (P)	102 (P)	103 (P)	104 (P)
FLAMEA	101 (P)	102 (P)	103 (P)	104 (P)
PAVONE	101 (P)	102 (P)	103 (P)	104 (P)
TURA	101 (A)	–	–	104 (A)
FARFALLA	101 (A)	–	–	104 (A)
FLINTER pro	101 (A)	–	–	104 (A)
FLINTER	101 (A)	–	–	104 (A)
NIVELLO+	101 (LA) 101 (RA)	–	–	104 (LA) 104 (RA)
NIVELLO	101 (LA) 101 (RA)	–	–	104 (LA) 104 (RA)
FLUTURE	–	–	–	104 (A)

(A) = opening outward – (P) = swing door - (FP) = swing folding-system in combination – (F) = folding-system – (LA) = Beschlag links montiert, nach außen hin öffnend – (RA) = Beschlag rechts montiert, nach außen hin öffnend

*available from 2026

type **niche showers**

MADE IN GERMANY







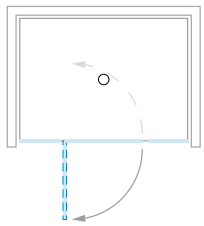
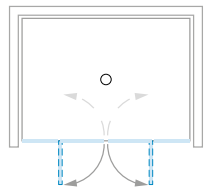
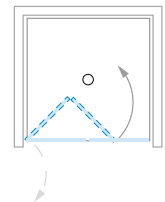
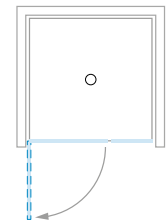
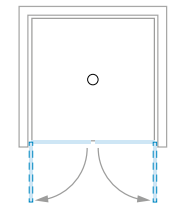

	105 (P)	106 (P)	107 (FP)	102 (P)	103 (P)
	105 (P)	106 (P)	107 (FP)	102 (P)	103 (P)
	105 (P)	106 (P)	107 (FP)	102 (P)	103 (P)
	105 (P)	106 (P)	107 (FP)	102 (P)	103 (P)
	105 (P)	106 (P)	107 (FP)	102 (P)	103 (P)
	105 (P)	106 (P)	107 (FP)	102 (P)	103 (P)
	105 (P)	106 (P)	-	102 (P)	103 (P)
	105 (A)	106 (A)	107 (F)	108 (A)	109 (A)
	105 (A)	106 (A)	-	108 (A)	109 (A)
	105 (A)	106 (A)	107 (F)	108 (A)	109 (A)
	105 (A)	106 (A)	-	108 (A)	109 (A)
	105 (LA) 105 (RA)	106 (A)	-	108 (LA) 108 (RA)	109 (A)
	105 (LA) 105 (RA)	106 (A)	-	108 (LA) 108 (RA)	109 (A)
	105 (A)	106 (A)	-	–	–

Depending on the application example, the number and arrangement of stabilizer-bars, door hinges and angle brackets may vary or be required. For detailed information, please refer to our measurement sheets or ask our technical department. Information on standard dimensions of showers and abbreviations can be found on page 15.

type **corner showers**

MADE IN GERMANY

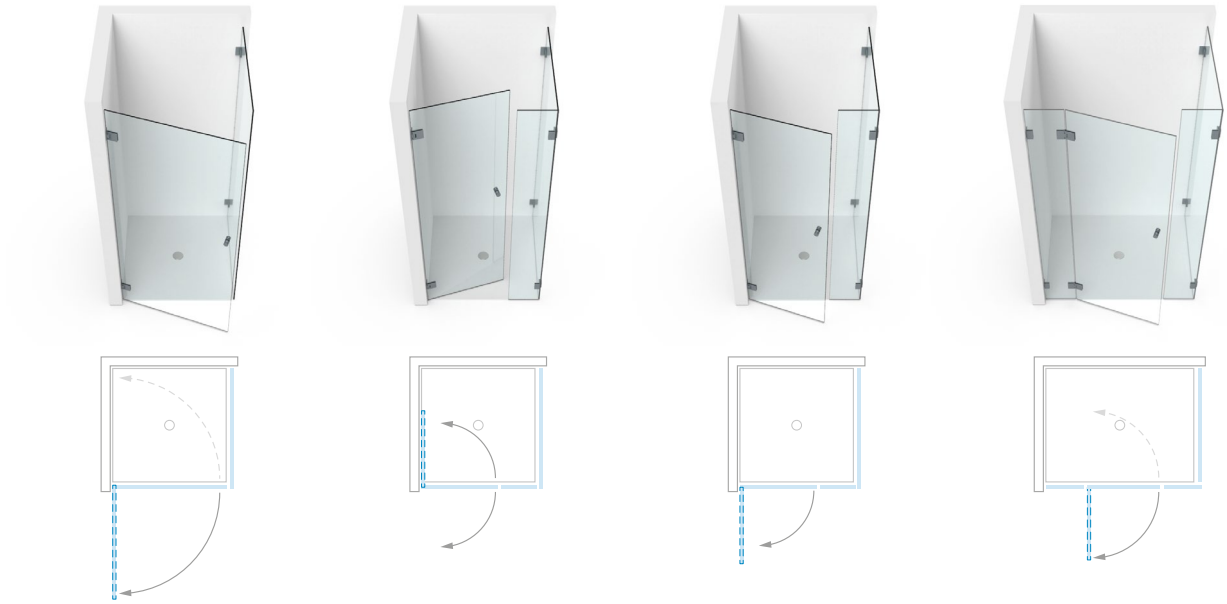

PONTERE+	201 (P)	202 (P)	202 (P)	204 (P)
FLAMEA pro	201 (P)	202 (P)	203 (P)	204 (P)
FLAMEA+	201 (P)	202 (P)	202 (P)	204 (P)
FARDELLO	201 (P)	202 (P)	202 (P)	204 (P)
FLAMEA pro mini	201 (P)	202 (P)	202 (P)	204 (P)
FLAMEA	201 (P)	202 (P)	202 (P)	204 (P)
PAVONE	201 (P)	202 (P)	202 (P)	204 (P)
TURA	201 (A)	–	203 (A)	204 (A)
FARFALLA	201 (A)	–	203 (A)	204 (A)
FLINTER pro	201 (A)	–	203 (A)	204 (A)
FLINTER	201 (A)	–	203 (A)	204 (A)
NIVELLO+	201 (LA) 201 (RA)	–	203 (LA) 203 (RA)	204 (LA) 204 (RA)
NIVELLO	201 (LA) 201 (RA)	–	203 (LA) 203 (RA)	204 (LA) 204 (RA)
FLUTURE	–	–	–	204 (A)

(A) = opening outward – (P) = swing door - (FP) = swing folding-system in combination – (F) = folding-system –
(LA) = links montiert, nach außen hin öffnend – (RA) = rechts montiert, nach außen hin öffnend

*available from 2026

type **corner showers**

MADE IN GERMANY

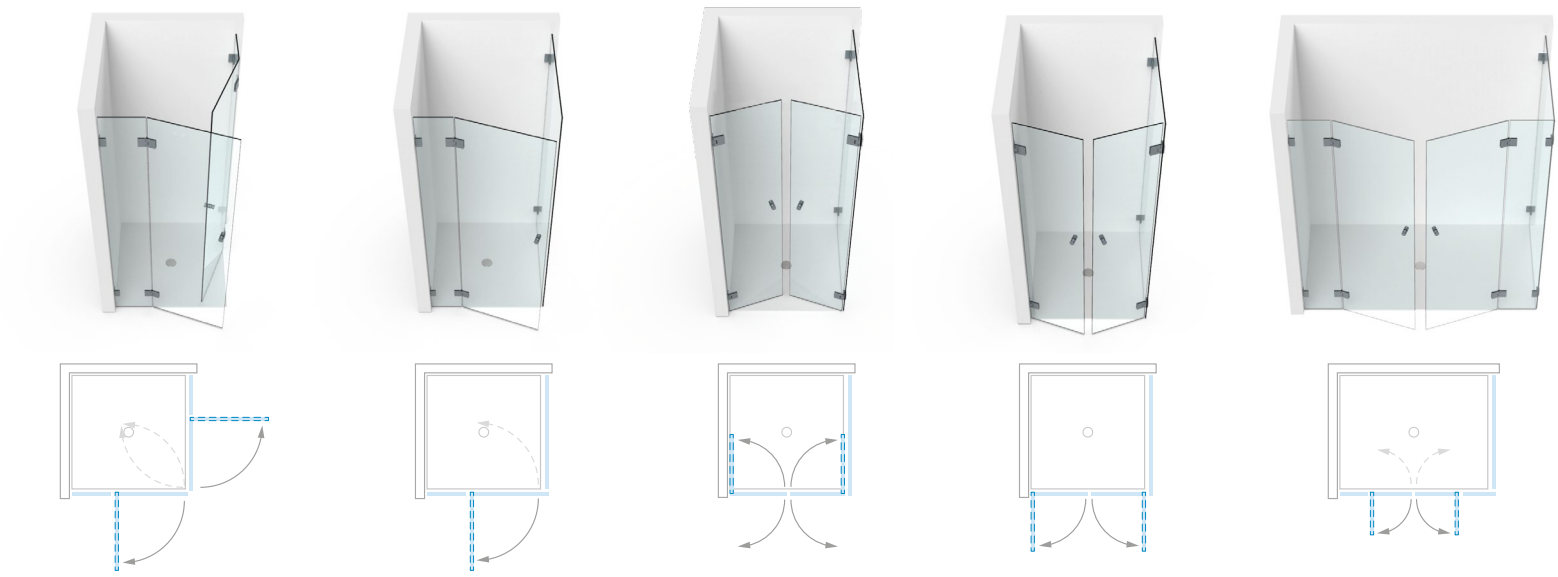

	209 (P)	210 (P)	211 (P)	211 (P)	213 (P)
	209 (P)	210 (P)	211 (P)	211 (P)	213 (P)
	209 (P)	210 (P)	211 (P)	211 (P)	213 (P)
	209 (P)	210 (P)	211 (P)	211 (P)	213 (P)
	209 (P)	210 (P)	211 (P)	211 (P)	213 (P)
	209 (P)	210 (P)	–	–	213 (P)
	209 (P)	210 (P)	211 (P)	211 (P)	213 (P)
	209 (A)	210 (A)	–	–	213 (A)
	209 (A)	210 (A)	–	–	213 (A)
	209 (A)	210 (A)	–	212 (A)	213 (A)
	209 (A)	210 (A)	–	212 (A)	213 (A)
	209 (A)	210 (LA) 210 (RA)	–	–	213 (LA) 213 (RA)
	209 (A)	210 (LA) 210 (RA)	–	212 (LA) 212 (RA)	213 (LA) 213 (RA)
	209 (A)	210 (A)	–	212 (A)	213 (A)

Depending on the application example, the number and arrangement of stabilizer-bars, door hinges and angle brackets may vary or be required. For detailed information, please refer to our measurement sheets or ask our technical department. Information on standard dimensions of showers and abbreviations can be found on page 15.

type **corner showers**

MADE IN GERMANY

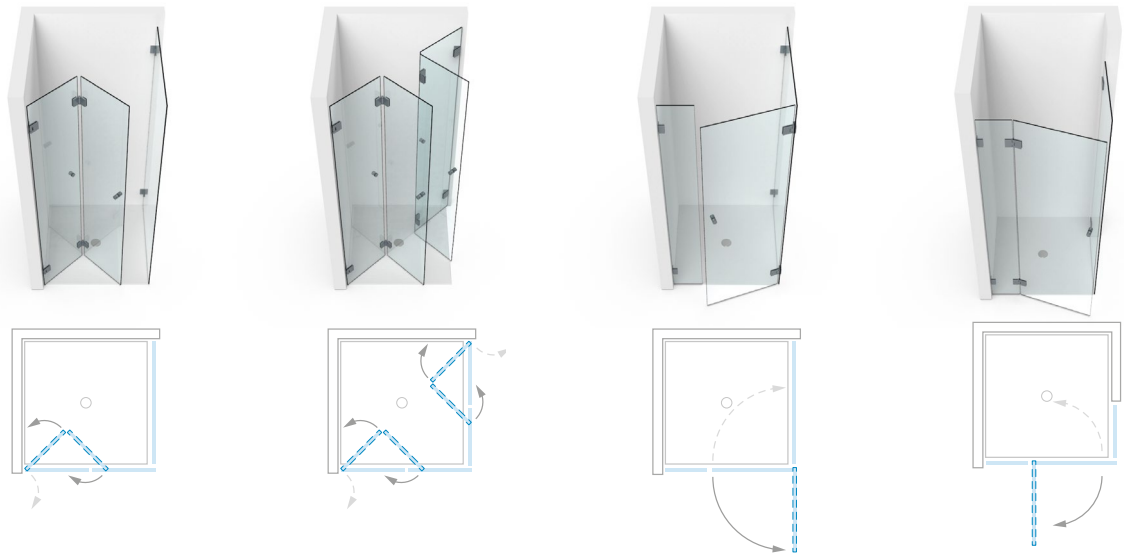

PONTERE+	215 (FP)	216 (FP)	217 (P)	218 (P)
FLAMEA pro	215 (P)	216 (P)	217 (P)	218 (P)
FLAMEA+	215 (FP)	216 (FP)	217 (P)	218 (P)
FARDELLO	215 (FP)	216 (FP)	217 (P)	218 (P)
FLAMEA pro mini	215 (FP)	216 (FP)	217 (P)	218 (P)
FLAMEA	215 (FP)	216 (FP)	–	218 (P)
PAVONE	-	-	217 (P)	-
TURA	215 (F)	216 (F)	–	–
FARFALLA	–	–	–	218 (A)
FLINTER pro	215 (F)	216 (F)	217 (A)	218 (A)
FLINTER	–	–	217 (A)	218 (A)
NIVELLO+	–	–	–	–
NIVELLO	–	–	–	218 (LA) 218 (RA)
FLUTURE	–	–	–	218 (A)

(A) = opening outward – (P) = swing door - (FP) = swing folding-system in combination – (F) = folding-system –
(LA) = links montiert, nach außen hin öffnend – (RA) = rechts montiert, nach außen hin öffnend

*available from 2026

type **corner showers**

MADE IN GERMANY

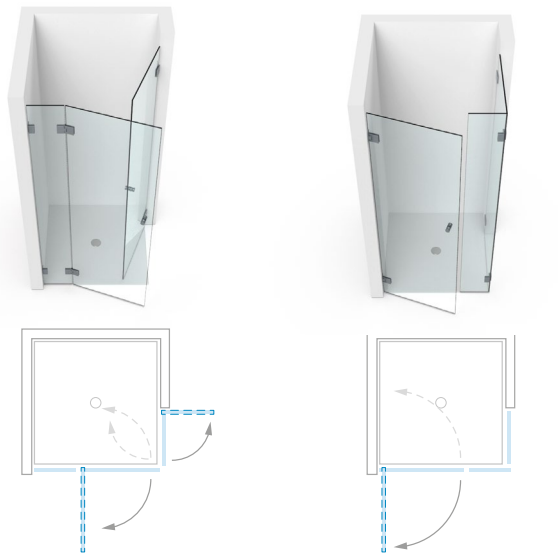

	219 (P)	221 (P)
	–	221 (P)
	219 (P)	221 (P)
	–	221 (P)
	–	221 (P)
	–	221 (P)
	–	-
	–	–
	–	221 (A)
	–	221 (A)
	–	221 (A)
	–	–
	–	221 (LA) 221 (RA)
	–	221 (A)



Depending on the application example, the number and arrangement of stabilizer-bars, door hinges and angle brackets may vary or be required. For detailed information, please refer to our measurement sheets or ask our technical department. Information on standard dimensions of showers and abbreviations can be found on page 15.

type **pentagonal showers**

MADE IN GERMANY

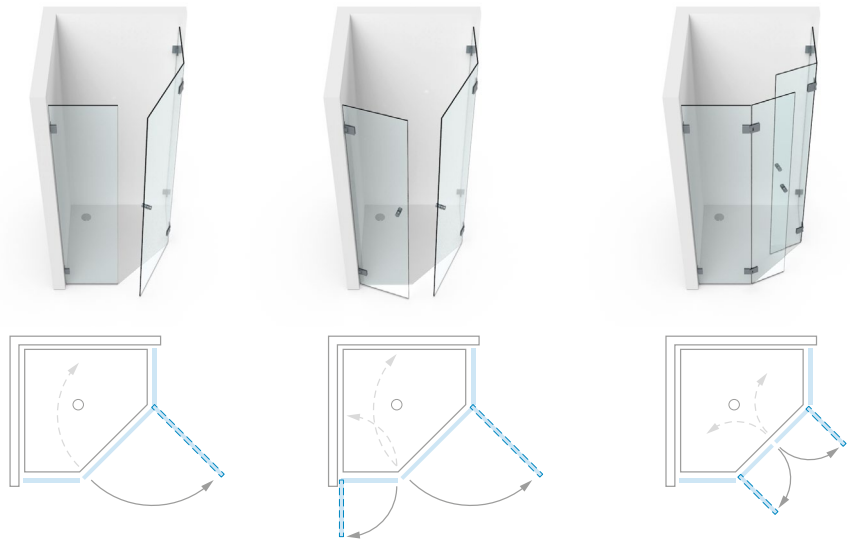

PONTERE+	301 (P)	302 (P)	303 (P)
FLAMEA pro	–	–	–
FLAMEA+	301 (P)	302 (P)	303 (P)
FARDELLO	–	–	–
FLAMEA pro mini	–	–	–
FLAMEA	–	–	–
PAVONE	–	–	–
TURA	–	–	–
FARFALLA	301 (A)	–	303 (A)
FLINTER pro	–	–	–
FLINTER	301 (A)	302 (A)	303 (A)
NIVELLO+	301 (LA) 301 (RA)	–	303 (A)
NIVELLO	301 (LA) 301 (RA)	–	303 (A)
FLUTURE	–	–	–

(A) = opening outward – (P) = swing door - (FP) = swing folding-system in combination – (F) = folding-system –
(LA) = links montiert, nach außen hin öffnend – (RA) = rechts montiert, nach außen hin öffnend

*available from 2026

type **round showers**

MADE IN GERMANY

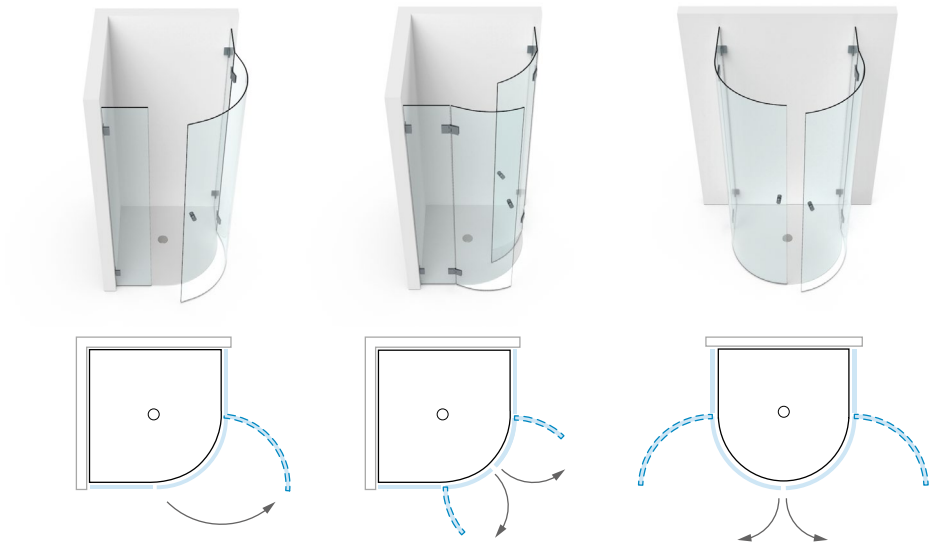

PONTERE+	–	–	–
FLAMEA pro			
FLAMEA+	–	–	–
FARDELLO	–	–	–
FLAMEA pro mini	–	–	–
FLAMEA	–	–	–
PAVONE	–	–	–
TURA	501 (A)	502 (A)	503 (A)
FARFALLA	501 (A)	502 (A)	503 (A)
FLINTER pro	–	502 (A)	–
FLINTER	–	502 (A)	–
NIVELLO+	–	–	–
NIVELLO	–	502 (A)	–
FLUTURE	–	502 (A)	–

Depending on the application example, the number and arrangement of stabilizer-bars, door hinges and angle brackets may vary or be required. For detailed information, please refer to our measurement sheets or ask our technical department. Information on standard dimensions of showers and abbreviations can be found on page 15.

type **u-showers**

MADE IN GERMANY

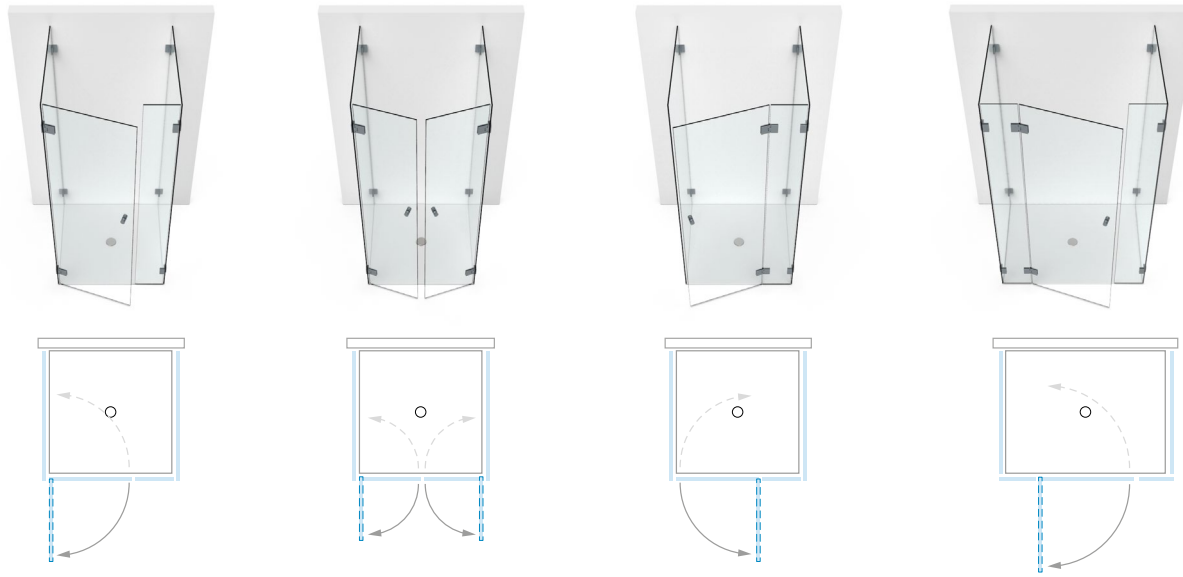

PONTERE+	401 (P)	402 (P)	403 (P)	404 (P)
FLAMEA pro	401 (P)	402 (P)	403 (P)	404 (P)
FLAMEA+	401 (P)	402 (P)	403 (P)	404 (P)
FARDELLO	401 (P)	402 (P)	403 (P)	404 (P)
FLAMEA pro mini	401 (P)	402 (P)	403 (P)	404 (P)
FLAMEA	-	-	403 (P)	404 (P)
PAVONE	401 (P)	402 (P)	403 (P)	404 (P)
TURA	–	–	403 (A)	404 (A)
FARFALLA	–	–	403 (A)	404 (A)
FLINTER pro	401 (A)	402 (A)	403 (A)	404 (A)
FLINTER	401 (A)	402 (A)	403 (A)	404 (A)
NIVELLO+	–	–	403 (LA) 403 (RA)	404 (LA) 404 (RA)
NIVELLO	–	–	403 (LA) 403 (RA)	404 (LA) 404 (RA)
FLUTURE	–	–	403 (A)	404 (A)

(A) = opening outward – (P) = swing door - (FP) = swing folding-system in combination – (F) = folding-system –
(LA) = links montiert, nach außen hin öffnend – (RA) = rechts montiert, nach außen hin öffnend

type **u-showers**

MADE IN GERMANY





406 (P)
406 (P)
406 (P)
406 (P)
406 (P)
406 (P)
406 (P)
406 (A)
406 (A)
406 (A)
406 (A)
406 (A)
406 (A)
406 (A)

Depending on the application example, the number and arrangement of stabilizer-bars, door hinges and angle brackets may vary or be required. For detailed information, please refer to our measurement sheets or ask our technical department. Information on standard dimensions of showers and abbreviations can be found on page 15.

type **bath tub solutions**

MADE IN GERMANY

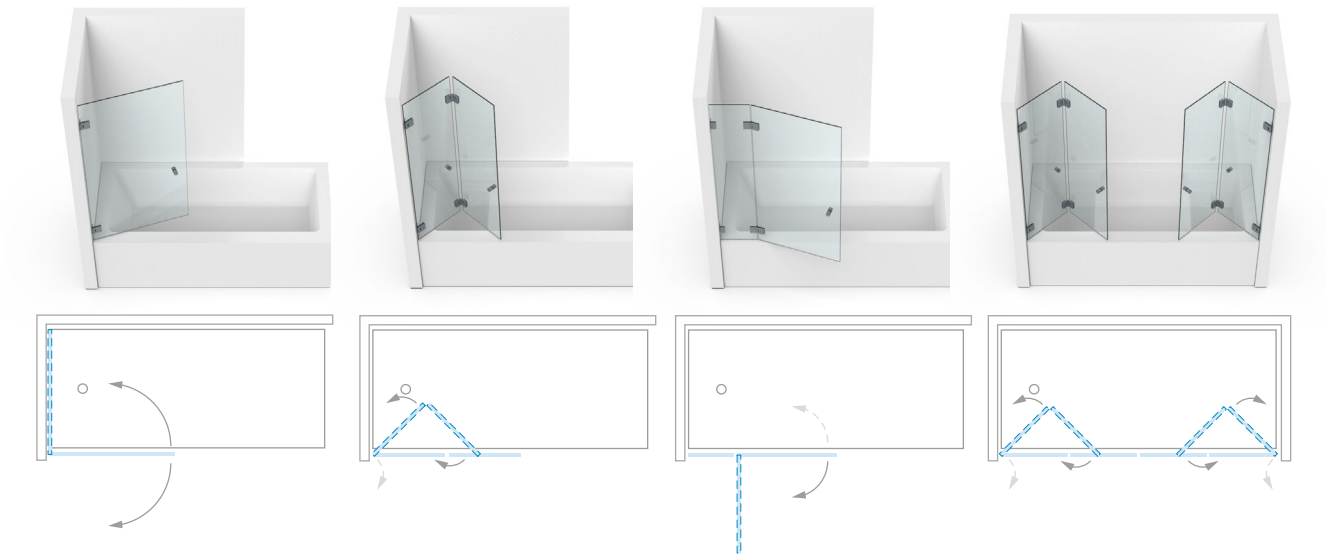

PONTERE+	601 (P)	602 (FP)	603 (P)	604 (FP)
FLAMEA pro	601 (P)	602 (FP)	603 (P)	604 (FP)
FLAMEA+	601 (P)	602 (FP)	603 (P)	604 (FP)
FARDELLO	601 (P)	602 (FP)	603 (P)	604 (FP)
FLAMEA pro mini	601 (P)	602 (FP)	603 (P)	604 (FP)
FLAMEA	601 (P)	602 (FP)	603 (P)	604 (FP)
PAVONE	601 (P)	–	603 (P)	–
TURA	–	602 (F)	603 (A)	604 (F)
FARFALLA	–	–	603 (A)	–
FLINTER pro	–	602 (F)	603 (A)	604 (F)
FLINTER	–	–	603 (A)	–
NIVELLO+	–	–	603 (LA) 603 (RA)	–
NIVELLO	–	–	603 (LA) 603 (RA)	–
FLUTURE	–	–	603 (A)	–

(A) = opening outward – (P) = swing door - (FP) = swing folding-system in combination – (F) = folding-system – (LA) = links montiert, nach außen hin öffnend – (RA) = rechts montiert, nach außen hin öffnend

*available from 2026

type **bath tub solutions**

MADE IN GERMANY

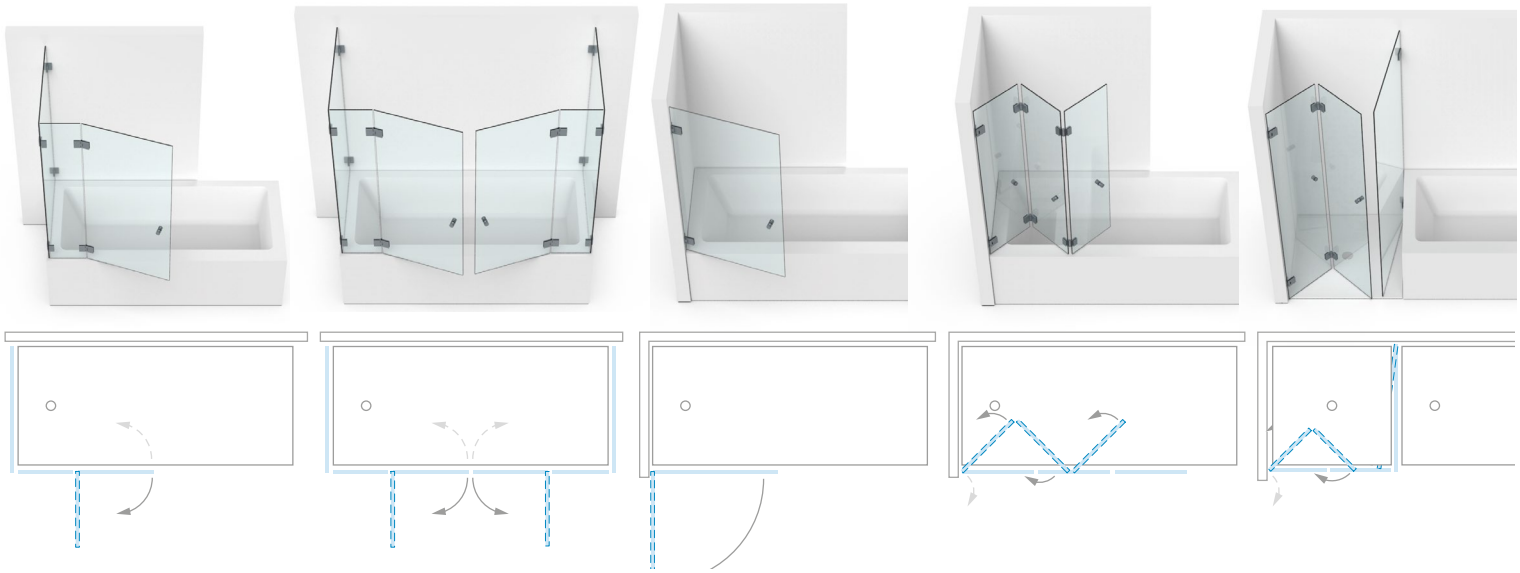

	605 (P)	606 (P)	601 (P)	608 (FP)	609 (FP)
	605 (P)	606 (P)	601 (P)	608 (FP)	609 (FP)
	605 (P)	606 (P)	601 (P)	608 (FP)	609 (FP)
	605 (P)	606 (P)	601 (P)	608 (FP)	609 (FP)
	605 (P)	606 (P)	601 (P)	608 (FP)	609 (FP)
	605 (P)	606 (P)	601 (P)	608 (FP)	609 (FP)
	605 (P)	606 (P)	601 (P)	–	–
	605 (A)	606 (A)	607 (A)	608 (F)	609 (F)
	605 (A)	606 (A)	607 (A)	–	–
	605 (A)	606 (A)	607 (A)	608 (F)	609 (F)
	605 (A)	606 (A)	607 (A)	–	–
	605 (LA) 605 (RA)	606 (A)	607 (LA) 607 (RA)	–	–
	605 (LA) 605 (RA)	606 (A)	607 (LA) 607 (RA)	–	–
	–	606 (A)	–	–	–

Depending on the application example, the number and arrangement of stabilizer-bars, door hinges and angle brackets may vary or be required. For detailed information, please refer to our measurement sheets or ask our technical department. Information on standard dimensions of showers and abbreviations can be found on page 15.

type **bath tub solutions**

MADE IN GERMANY

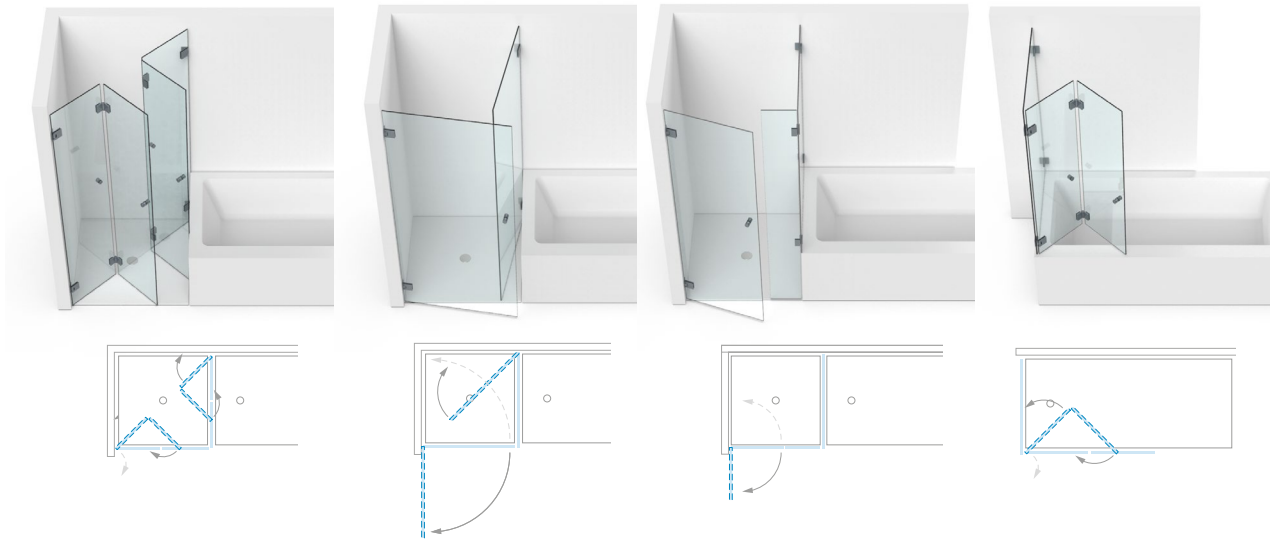

PONTERE+	610 (FP)	611 (P)	612 (P)	613 (FP)
FLAMEA pro	610 (FP)	611 (P)	612 (P)	613 (FP)
FLAMEA+	610 (FP)	611 (P)	612 (P)	613 (FP)
FARDELLO	610 (FP)	611 (P)	612 (P)	613 (FP)
FLAMEA pro mini	610 (FP)	611 (P)	612 (P)	613 (FP)
FLAMEA	610 (FP)	611 (P)	612 (P)	613 (FP)
PAVONE	–	611 (P)	612 (P)	–
TURA	610 (F)	611 (A)	612 (A)	613 (F)
FARFALLA	–	611 (A)	612 (A)	–
FLINTER pro	610 (F)	611 (A)	612 (A)	613 (F)
FLINTER	–	611 (A)	612 (A)	–
NIVELLO+	–	–	612 (LA) 612 (RA)	–
NIVELLO	–	611 (LA) 611 (RA)	612 (LA) 612 (RA)	–
FLUTURE	–	–	–	–

(A) = opening outward – (P) = swing door - (FP) = swing folding-system in combination – (F) = folding-system – (LA) = links montiert, nach außen hin öffnend – (RA) = rechts montiert, nach außen hin öffnend

*available from 2026

type **bath tub solutions**

MADE IN GERMANY

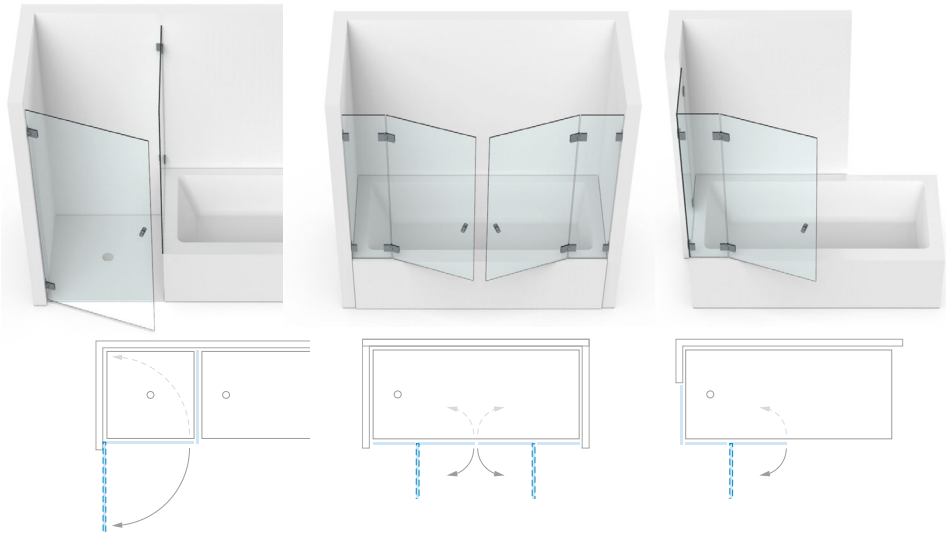

	615 (P)	616 (P)	617 (P)
	615 (P)	616 (P)	617 (P)
	615 (P)	616 (P)	617 (P)
	615 (P)	616 (P)	617 (P)
	615 (P)	616 (P)	617 (P)
	615 (P)	616 (P)	617 (P)
	615 (P)	616 (P)	–
	615 (A)	616 (A)	–
	615 (A)	616 (A)	617 (A)
	615 (A)	616 (A)	617 (A)
	615 (A)	616 (A)	617 (A)
	615 (LA) 615 (RA)	616 (A)	–
	615 (LA) 615 (RA)	616 (A)	617 (LA) 617 (RA)
	–	616 (A)	617 (A)

Depending on the application example, the number and arrangement of stabilizer-bars, door hinges and angle brackets may vary or be required. For detailed information, please refer to our measurement sheets or ask our technical department. Information on standard dimensions of showers and abbreviations can be found on page 15.

stabilization and doorstops

MADE IN GERMANY

Sustainability is important to us. Therefore we place great emphasis on safety, intelligent technology and good quality of the material.
To stabilize your shower and to protect it from improper use, such as over-opened doors, there are various sensible possibilities. Your shower expert will be happy to assist you.

with stabilizer angle bracket





8439ZN_L/R-180/8439ZN_L/R-280/8438ZN5 -150/8438ZN5 -250
see page 618

with railing



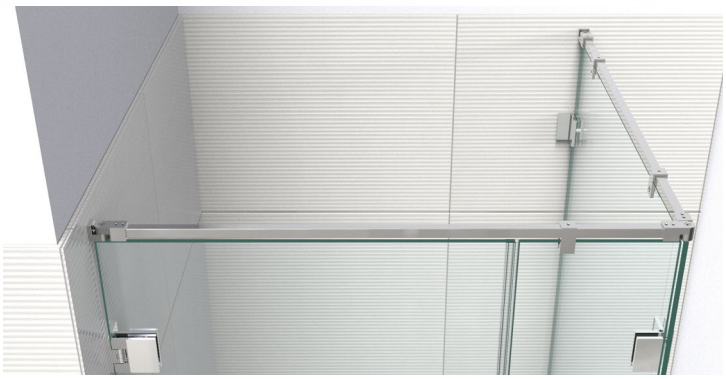

8744ZN_/8794ZN_
see page 593

with stabilizer-bars





8474MS_
see page 334

door-stops





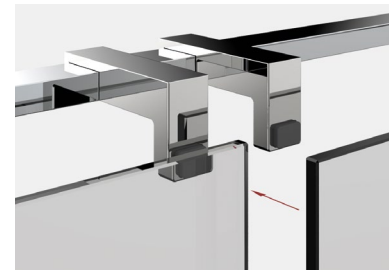

8491MS7
see page 337





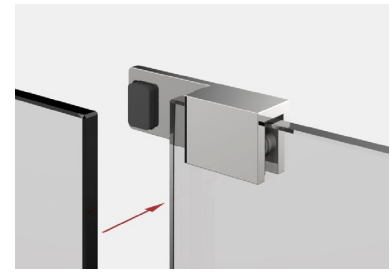

8490MS7-R/L
see page 344





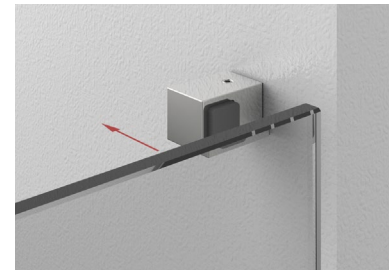

8274ZN_-WR
see page 349





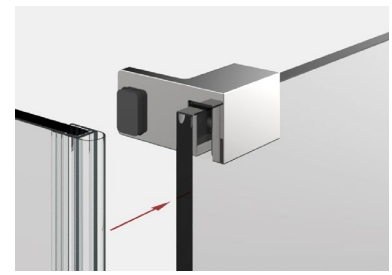

8489MS_-R/L
see page 344

Installation with swing door hinges

MADE IN GERMANY

the pivot point on swing door hinges causes the glass pane to protrude. This creates a drip edge on the outside, which must be taken into account during planning. For many swing door hinges, you will find the protrusion measurement in the table.

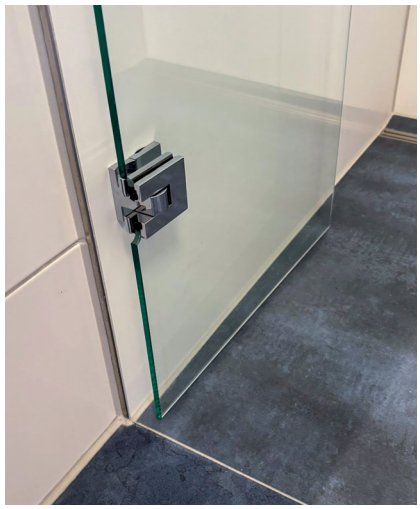

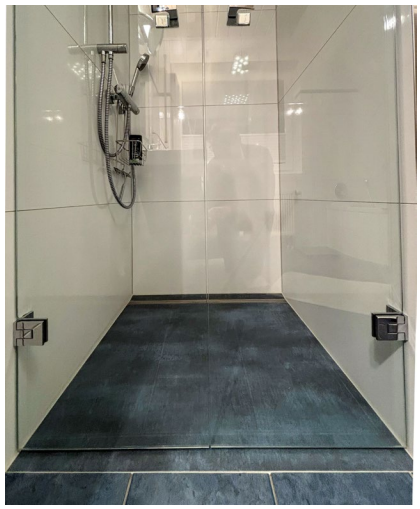

Example Flamaea Pro Mini

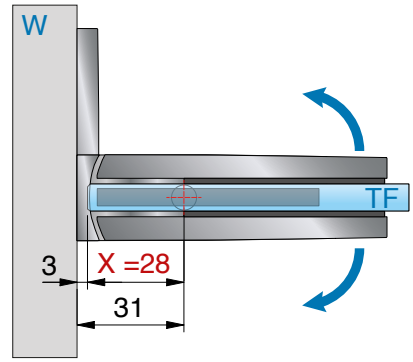

Example PONTERE+ 8314ZN
without seal

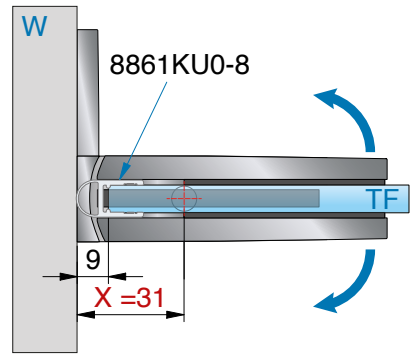

Example PONTERE+ 8314ZN
with seal

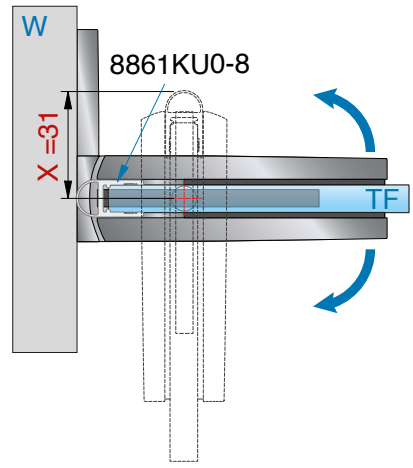

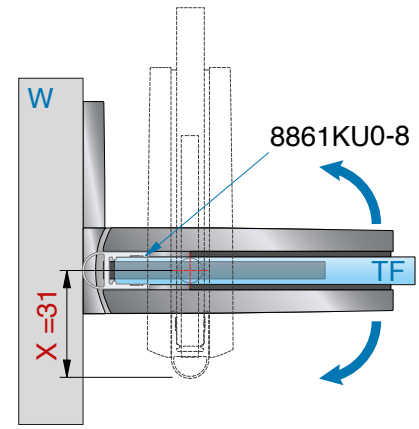

Installation with swing door hinges

MADE IN GERMANY

Hinge series	art. no.	feature	with seal = X	without seal DP = X
PONTERE+	8312ZN	glass-glass 180°	with 8861KU0-8 - 28 mm	25 mm
			with 8845KU0-8K - 28 mm	
			with 8857KU0-8 - 37 mm	
	8313ZN	glass-wall 90°	31 mm	28 mm
	8314ZN	glass-wall 90°	31 mm	28 mm
	8315ZN	glass-glass 90°	32 mm	29 mm
FLAMEA pro	8340ZN	glass-wall 90°	with 8861KU0-8 - 33 mm	31 mm
	8346ZN	glass-wall 90°	with 8861KU0-8 - 33 mm	31 mm
	8342ZN	glass-glass 180°	with 8861KU0-8 - 28 mm	25 mm
			with 8845KU0-8K - 28 mm	
			with 8857KU0-8 - 28 mm	
	8315ZN	glass-glass 90°	34 mm	31 mm
FLAMEA+	8130ZN	glass-wall 90°	with 8861KU0-8 - 19 mm	16 mm
	8134ZN	glass-wall 90°	with 8861KU0-8 - 19 mm	16 mm
	8133ZN	glass-wall 180°	with 8861KU0-8 - 19 mm	16 mm
			with 8862KU0-8 - 19 mm	
	8132ZN	glass-glass 180°	with 8861KU0-8 - 16 mm	13 mm
			with 8857KU0-8 - 16 mm	
	8131ZN	glass-glass 135°	with 8861KU0-8 - 15 mm	12 mm
			with 8860KU0-8 - 15 mm	
	8136ZN	glass-glass 90°	20 mm	17 mm
FARDELLO	8900ZN	glass-wall 90°	19 mm	16 mm
	8901ZN	glass-glass 180°	15,5 mm	12,5 mm
	8902ZN	glass-glass 90°	20 mm	17 mm
FLAMEA pro mini	8330ZN	glass-wall 90°	33 mm	31 mm
	8332ZN	glass-glass 180°	with 8861KU0-8 - 28 mm	25 mm
			with 8857KU0-8 - 28 mm	
			with 8845KU0-8 - 28 mm	
	8334ZN	glass-glass 90°	with 8861KU0-8 - 34 mm	31 mm
FLAMEA	8180ZN	glass-wall 90°	15,5 mm	15,5 mm
	8182ZN	glass-glass 180°	14,5 mm	11,5 mm
PAVONE	8390ZN	glass-wall 90°	19 mm	16 mm
	8391ZN	glass-wall 90°	19 mm	16 mm
	8392ZN	glass-glass 180°	with 8857KU0-8 - 28 mm	16 mm
			with 8845KU0-8 - 16 mm	

available **surface colors**

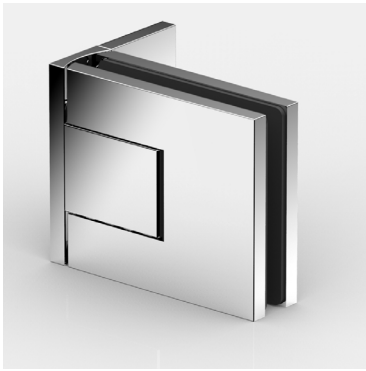

ZN5
gloss chrome

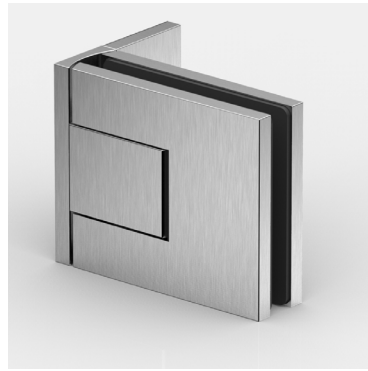

ZNPVD22
stainless steel optic

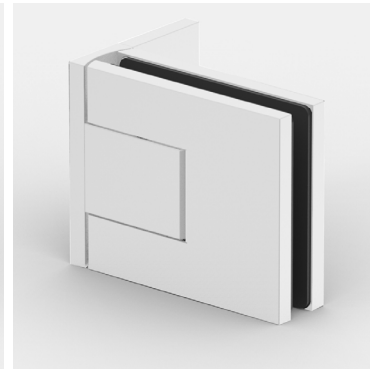

ZN134
white matt

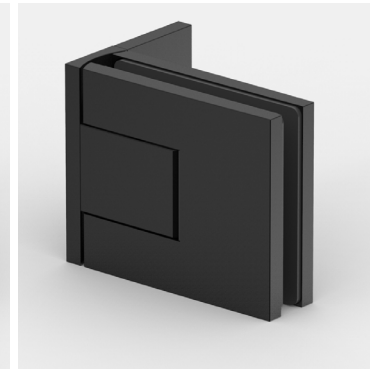

ZN135
deep black matt



ZNPVD39
gold bronze brushed

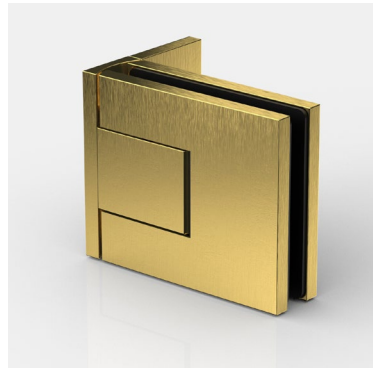

ZNPVD40
gold optic brushed



ZNPVD41
copper optic brushed



ZNPVD42
graphite metal optic brushed

compatibility chart for fittings manufacturer colors see page 14



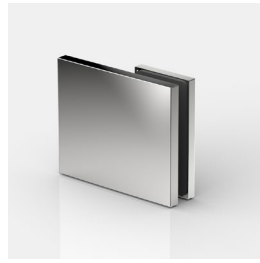

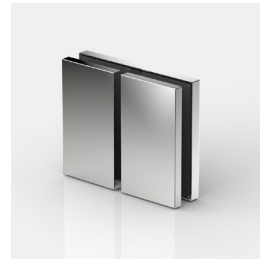



corresponding **angle brackets**

for PONTERE+ can be found on page 72.

MADE IN GERMANY



PS SERVICE

PONTERE+

shower swing door hinge



PONTERE+ – stylish design - effortless assembly

MADE IN GERMANY

The new PONTERE+ is the second generation of our proven classic. It is characterised by numerous innovations and improvements in detail. It is an aesthetic and functional highlight for customised solutions in the high-quality commercial and private sectors. When developing the new shower door hinge series, the focus was on effective, fast and professional installation. This is why the zero position is set precisely from the outside. The new cap technology enables tool-free installation and removal (e.g. for servicing).

New, contemporary surfaces, matching the trends of well-known bathroom bathroom fitting manufacturers, round off the high quality of the system. PONTERE+ therefore offers maximum cost-effectiveness and ease of servicing for use in the private or hotel sector.

- **load capacity (2 hinges):** max. permissible weight: 50 kg,max. door panel width: 1000 mm
- glass thickness: 6/8/10 mm
- **opening angle of the hinge 115° possible on both sides**
- swing door hinge: glass-wall / glass-glass
- matching angle brackets
- sealing profile spaced on the fitting side in the hinge area
- optimized for installation without sealing profiles
- minimized gap dimensions
- **closed-position infinitely adjustable from the outside** advantages:
  - **better detection** of the closed-position from the outside
  - no need to enter the shower repeatedly
  - Caps cover all mounting elements for easy maintenance and cleaning
- self-closing over the last few centimeters
- convenient installation thanks to innovative cover-cap-technology
- concealed closed-position adjustment
- areas of application:
  wellness area, barrier-free bathrooms, commercial projects

A wide range of hinges – a wide range of possibilities

MADE IN GERMANY



8314ZN glass-wall 90°



8307ZN glass-wall 90°



8310ZN glass-wall 180°



8308ZN glass-wall 135°



8312ZN glass-glass 180°



8315ZN glass-glass 90°



8311ZN glass-glass 135°



8316ZN glass-glass 90°



8303ZN adjustable angle brackets 100°-140°

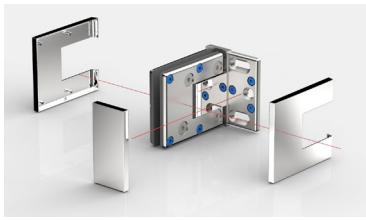

innovative cover-cap-technology

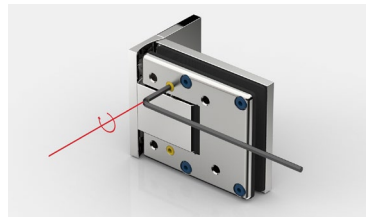

Closed position setting

- **Easy to install – effective, quick and professional:**
  - Removable cover caps can be easily replaced
  - Screws with TX 30
  - closed-position infinitely adjustable from the outside (siehe Seite <AE>)





- also available as **sauna hinge** (siehe Seite 362)

Multifunctional shower door hinge series

MADE IN GERMANY





8314ZN glass-wall 90°



8352ZN glass-glass 180°

- **Folding systems** in combination with **FLINTER pro** possible

In combination with **FLINTER pro**, a single-sided opening shower door hinge with close position adjustment, folding systems can also be implemented (e.g. for confined spaces in the bathroom, for easier cleaning of the shower, etc.).

Multifunctional shower door hinge series

MADE IN GERMANY



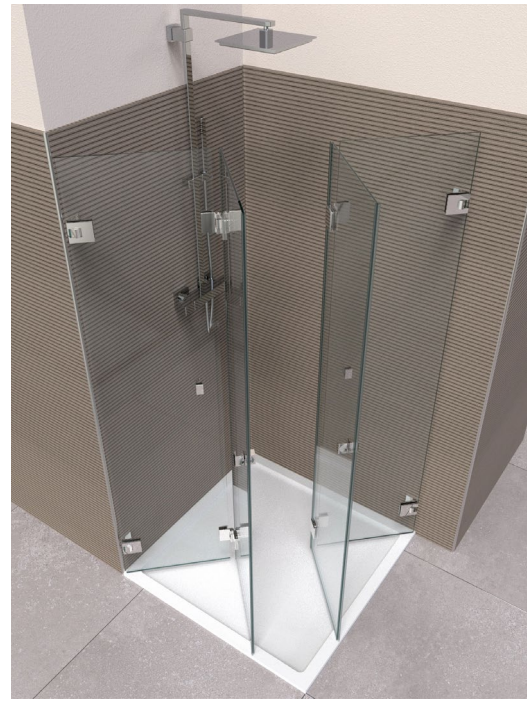

- **Folding systems** in combination with **FLINTER pro** possible



technical details

MADE IN GERMANY





- **enlarged opening angle:** The hinge series can be opened up to 115° on both sides, making it ideal for barrier-free areas.

technical details

MADE IN GERMANY





- **closed-position adjustment**
  - The closed-position of the door hinge can be precisely adjusted from the outside.
  - Door wings / side panel – escape route more easily recognisable from outside
  - no need to enter the shower repeatedly

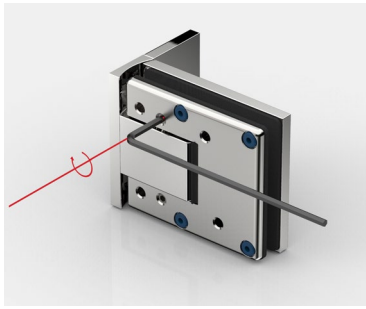

8314ZN

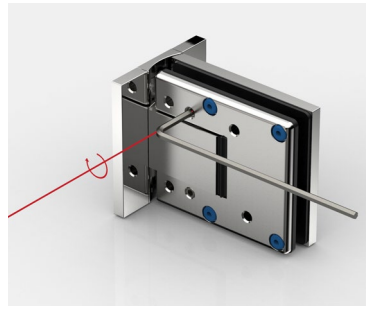

8313ZN

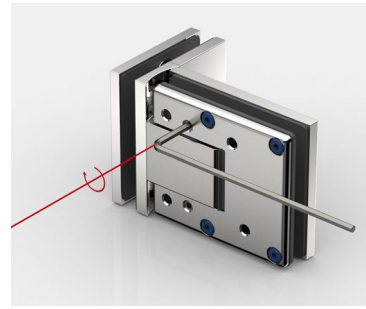

8315ZN

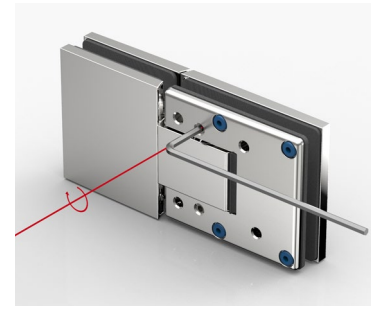

8312ZN

- **closed-position adjustment**
  - close position adjustable with door leaf aligned and sealing profiles attached
  - adjustment of the closing point even with non-right-angled walls

8314ZN glass-wall 90°

MADE IN GERMANY



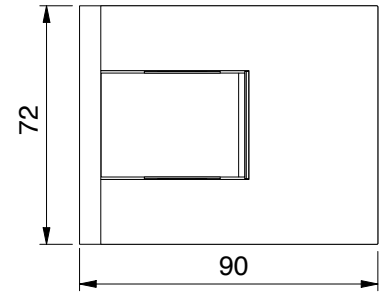

features

115° opening in both directions, one-sided mounting bracket, oblong hole, slotted hole adjustment with cover cap, infinitely adjustable closed-position, self-closing on the last centimetres, sealing profile interrupted on the hardware side in the hinge area.
Load capacity (2 hinges) 50 kg (max. door panel width 1000 mm)

*important

when using the hinges for 6 or 10 mm glass, please order the insert-set art. no. HZ-SET12 free of charge.
You can request the glass processing for 6 or 10 mm glass from our technical department.

article no	glass thickness
8314__	6*/8/10* mm

finish		
	ZN5	gloss chrome
	ZNPVD22	stainless steel optic
	ZN134	white matt
	ZN135	deep black matt
	ZNPVD39	gold bronze brushed
	ZNPVD40	gold optic brushed
	ZNPVD41	copper optic brushed
	ZNPVD42	graphite metal optic brushed



glass reference edge (inner panel)

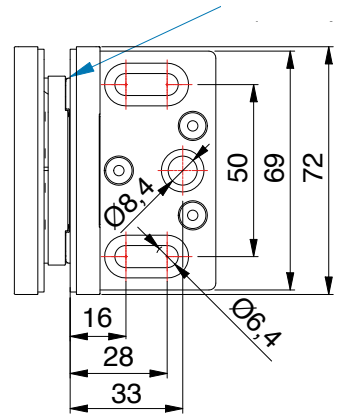

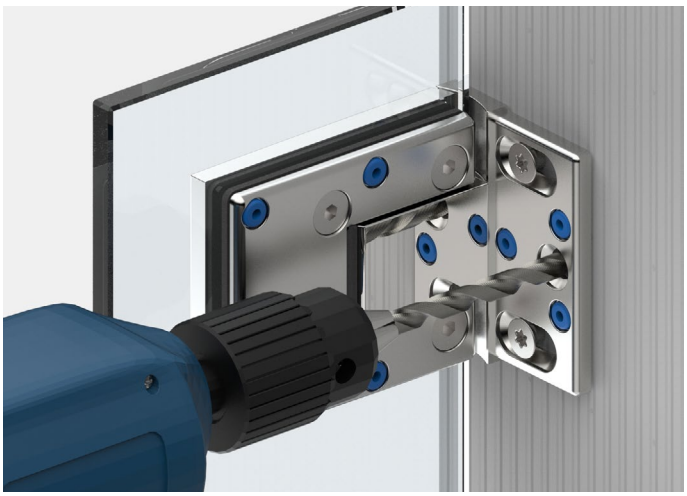

The 3rd fixing hole prevents the fittings from twisting on the wall. The shower hinge is designed in such a way that this hole can be drilled with an 8 mm drill bit while mounted.

8314ZN glass-wall 90°

MADE IN GERMANY



without seal profile, for 8 mm glass

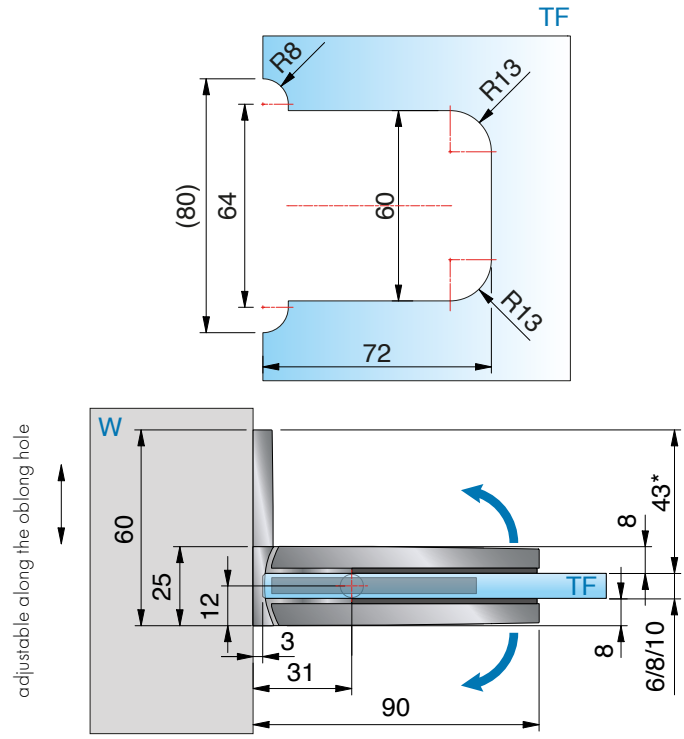



with seal profile 8861KU0-8-2010(2500), for 8 mm glass

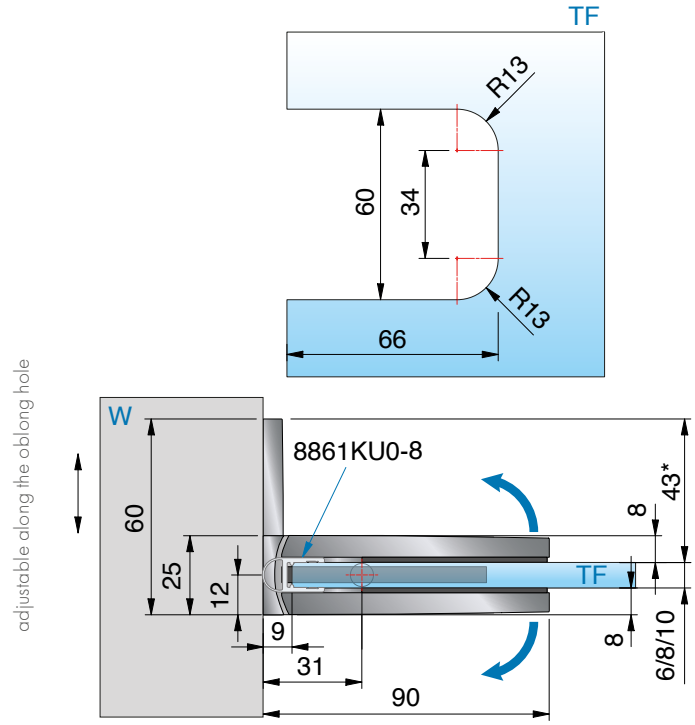

ST = side panel I TF = door panel I W = wall

8313ZN glass-wall 90°

MADE IN GERMANY



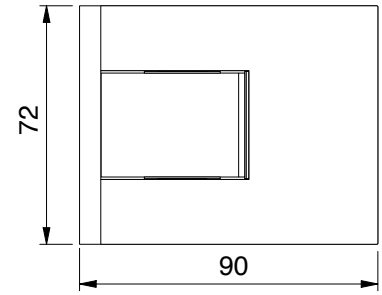

features

115° opening in both directions, one-sided mounting bracket, oblong hole, slotted hole adjustment with cover cap, infinitely adjustable closed-position, self-closing on the last centimetres, sealing profile interrupted on the hardware side in the hinge area.
Load capacity (2 hinges) 50 kg (max. door panel width 1000 mm)

*important

when using the hinges for 6 or 10 mm glass, please order the insert-set art. no. HZ-SET12 free of charge.
You can request the glass processing for 6 or 10 mm glass from our technical department.

article no	glass thickness
8313__	6*/8/10* mm

finish	
ZN5	gloss chrome
ZNPVD22	stainless steel optic
ZN134	white matt
ZN135	deep black matt
ZNPVD39	gold bronze brushed
ZNPVD40	gold optic brushed
ZNPVD41	copper optic brushed
ZNPVD42	graphite metal optic brushed





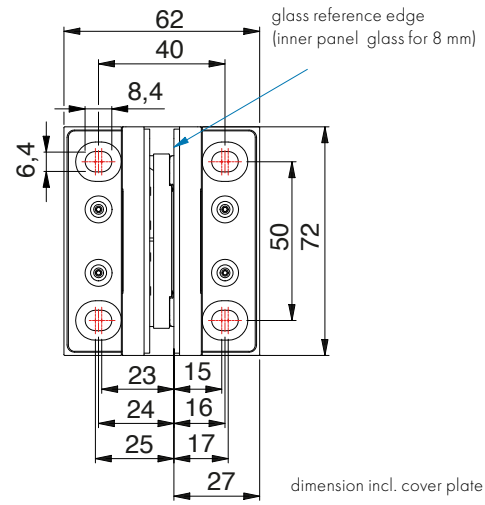

8313ZN glass-wall 90°

MADE IN GERMANY



without seal profile, for 8 mm glass

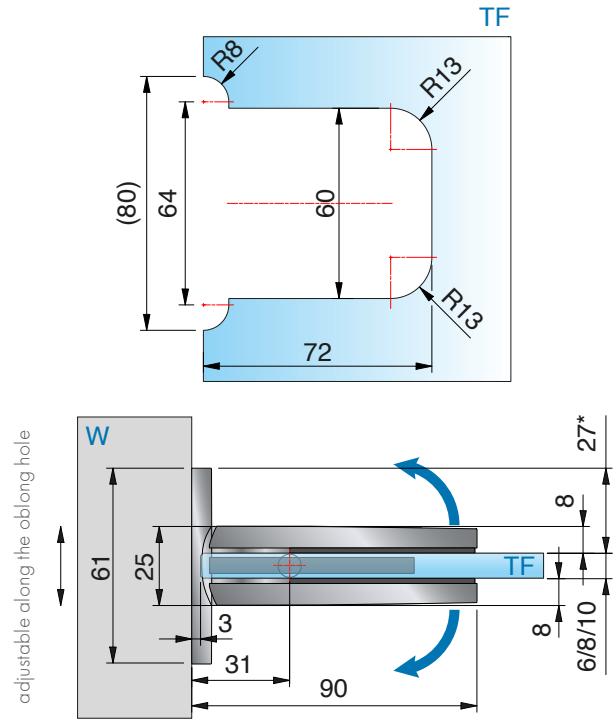



with seal profile 8861KU0-8-2010(2500), for 8 mm glass

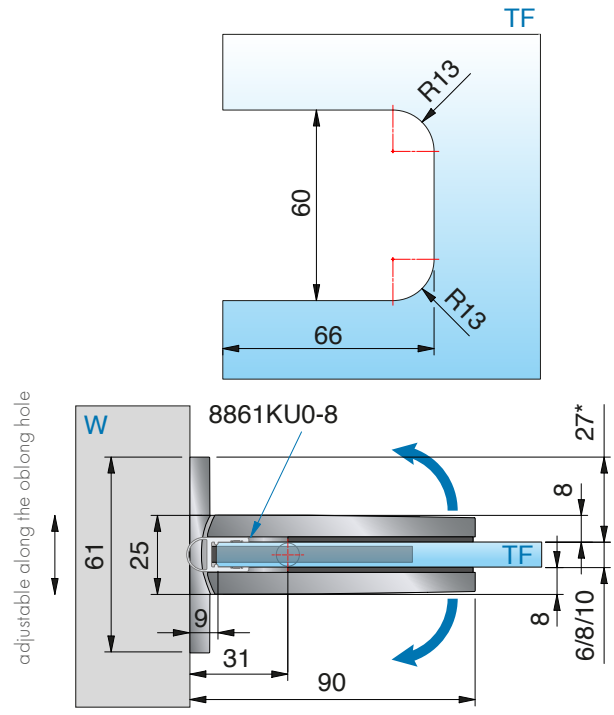

ST = side panel I TF = door panel I W = wall

8307ZN glass-wall 90°

MADE IN GERMANY



PONTERE+ 8307ZN For narrow walls.
For use wherever mounting with a mounting bracket is not possible.
(Door leaf max. 35 kg and width max. 700 mm)

8307ZN glass-wall 90°

MADE IN GERMANY



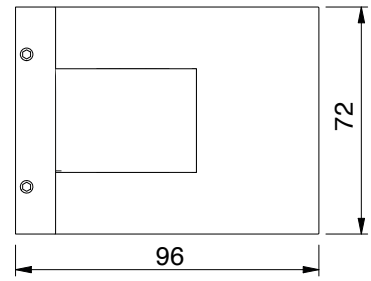

features

115° opening in both directions, without mounting bracket, 3 mm height adjustable,infinitely variable close position adjustment, self-closing over the last few centimetres, sealing profile interrupted on the hardware side in the hinge area.
Load capacity (2 hinges) 35 kg (max. door panel width 700 mm)

*important

when using the hinges for 6 or 10 mm glass, please order the insert-set art. no. HZ-SET12 free of charge.
You can request the glass processing for 6 or 10 mm glass from our technical department.

article no	glass thickness
8307__	6*/8/10* mm

finish		
	ZN5	gloss chrome
	ZNPVD22	stainless steel optic
	ZN134	white matt
	ZN135	deep black matt
	ZNPVD39	gold bronze brushed
	ZNPVD40	gold optic brushed
	ZNPVD41	copper optic brushed
	ZNPVD42	graphite metal optic brushed



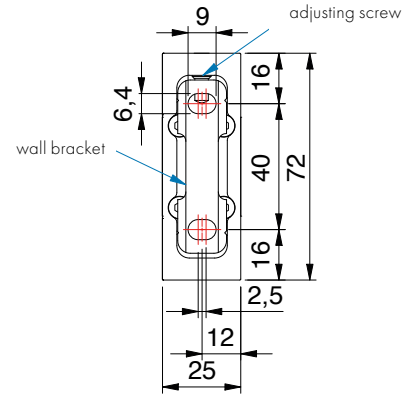



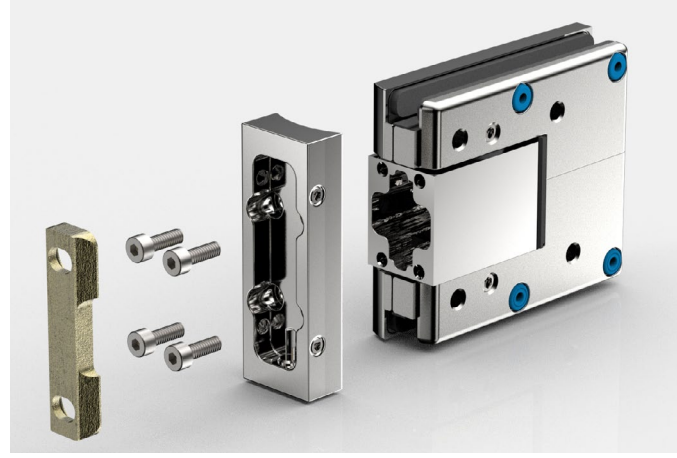

8307ZN glass-wall 90°

MADE IN GERMANY





The shower door hinge must be protected against **excessive pressure** when opening.

8307ZN glass-wall 90°

MADE IN GERMANY



without seal profile, for 8 mm glass

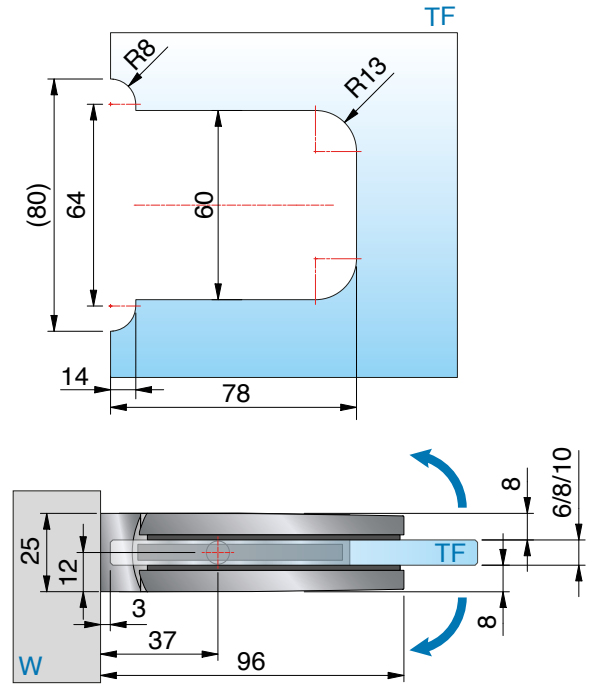



with seal profile 8861KU0-8-2010(2500), for 8 mm glass

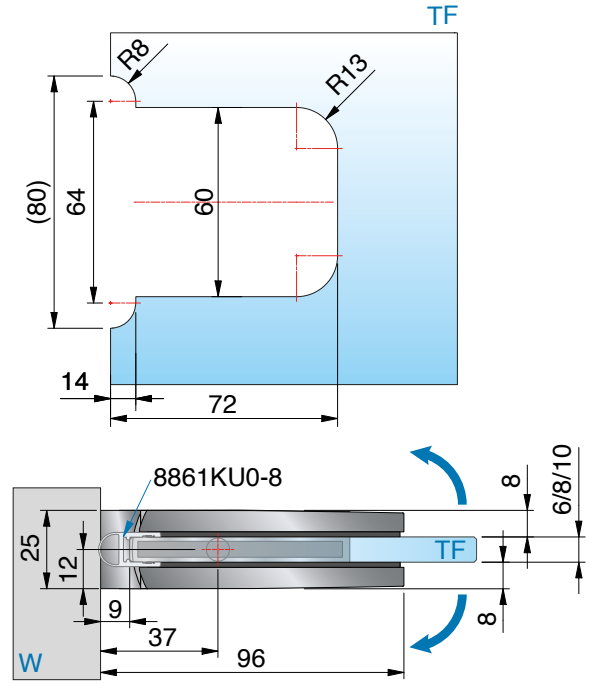

ST = side panel I TF = door panel I W = wall

8308ZN glass-wall 135°

MADE IN GERMANY



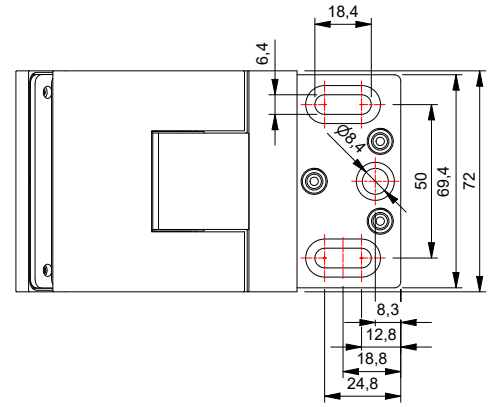

article no	glass thickness
8307__	6*/8/10* mm

finish		
	ZN5	gloss chrome
	ZNPVD22	stainless steel optic
	ZN134	white matt
	ZN135	deep black matt
	ZNPVD39	gold bronze brushed
	ZNPVD40	gold optic brushed
	ZNPVD41	copper optic brushed
	ZNPVD42	graphite metal optic brushed



features

115° opening in both directions, without mounting bracket, 3 mm height adjustable,infinitely variable close position adjustment, self-closing over the last few centimetres, sealing profile interrupted on the hardware side in the hinge area.
Load capacity (2 hinges) 50 kg (max. door panel width 1000 mm)

*important

when using the hinges for 6 or 10 mm glass, please order the insert-set art. no. HZ-SET12 free of charge.
You can request the glass processing for 6 or 10 mm glass from our technical department.





8308ZN glass-wall 135°

MADE IN GERMANY



with seal profile 8862KU0-8-2010(2500), for 8 mm glass

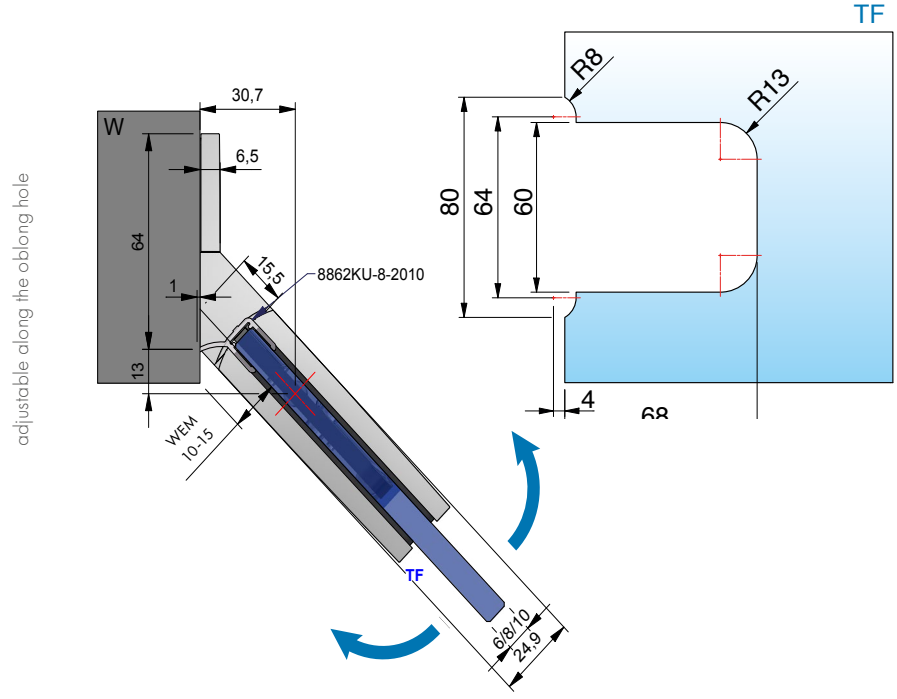

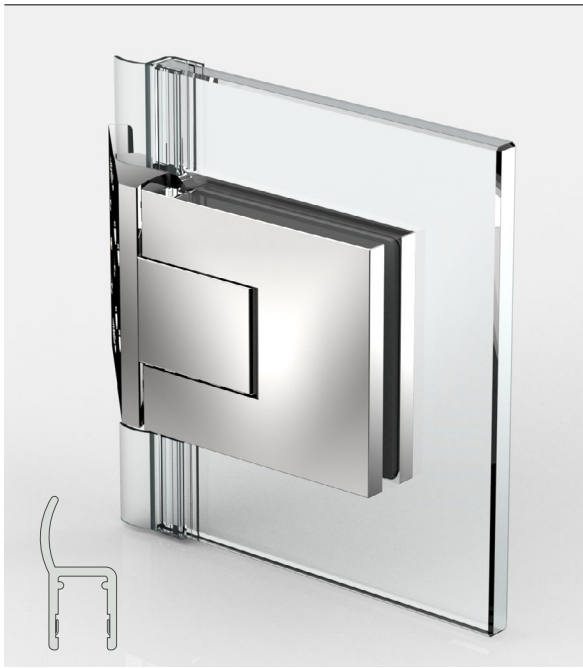

with seal profile 8857KU0-8-2010(2500), for 8 mm glass,
opens at least 45° on one side
ST = side panel I TF = door panel I W = wall

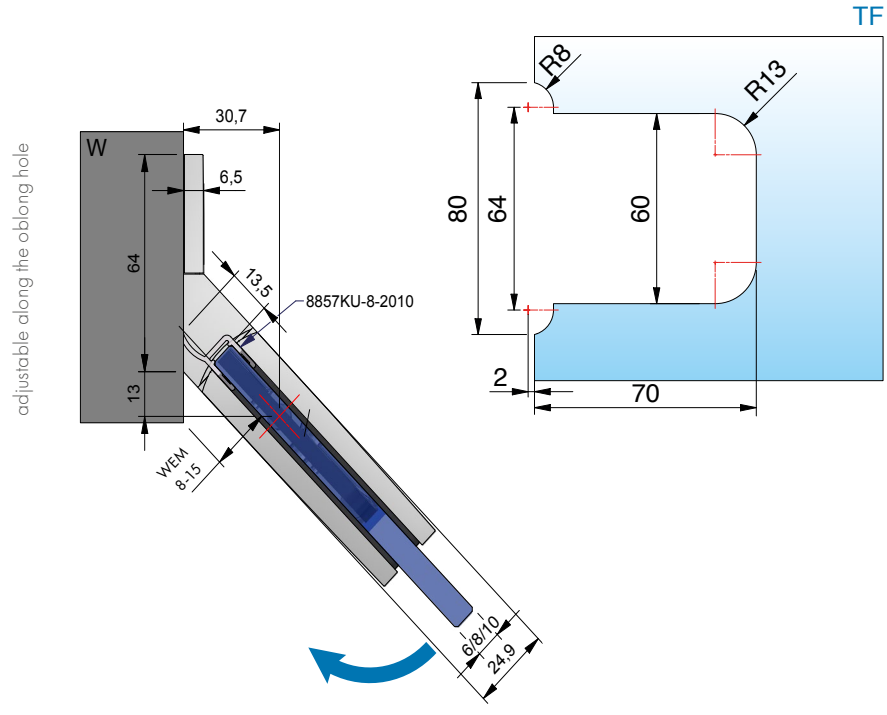

8310ZN glass-wall 180°

MADE IN GERMANY



8310ZN

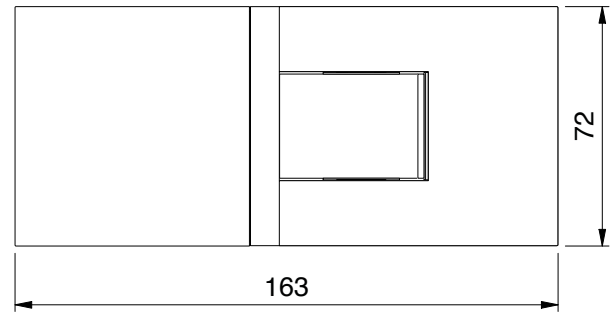

article no	glass thickness
8310__	6*/8/10* mm

finish

	ZN5	gloss chrome
	ZNPVD22	stainless steel optic
	ZN134	white matt
	ZN135	deep black matt
	ZNPVD39	gold bronze brushed
	ZNPVD40	gold optic brushed
	ZNPVD41	copper optic brushed
	ZNPVD42	graphite metal optic brushed

features

115° opening in both directions, one-sided mounting bracket, oblong hole, slotted hole adjustment with cover cap, infinitely adjustable closed-position, self-closing on the last centimetres, sealing profile interrupted on the hardware side in the hinge area.
Load capacity (2 hinges) 50 kg (max. door panel width 1000 mm)

*important

when using the hinges for 6 or 10 mm glass, please order the insert-set art. no. HZ-SET12 free of charge.
You can request the glass processing for 6 or 10 mm glass from our technical department.

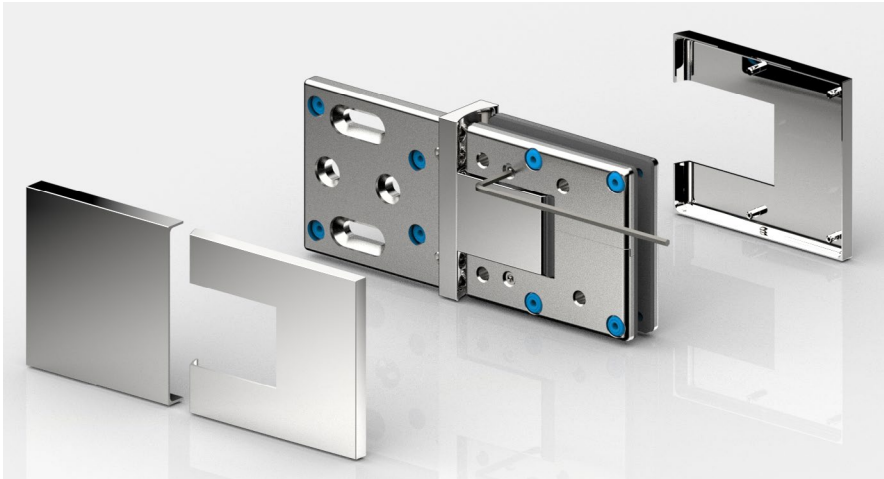

8310ZN glass-wall 180°

MADE IN GERMANY



without seal profile, for 8 mm glass

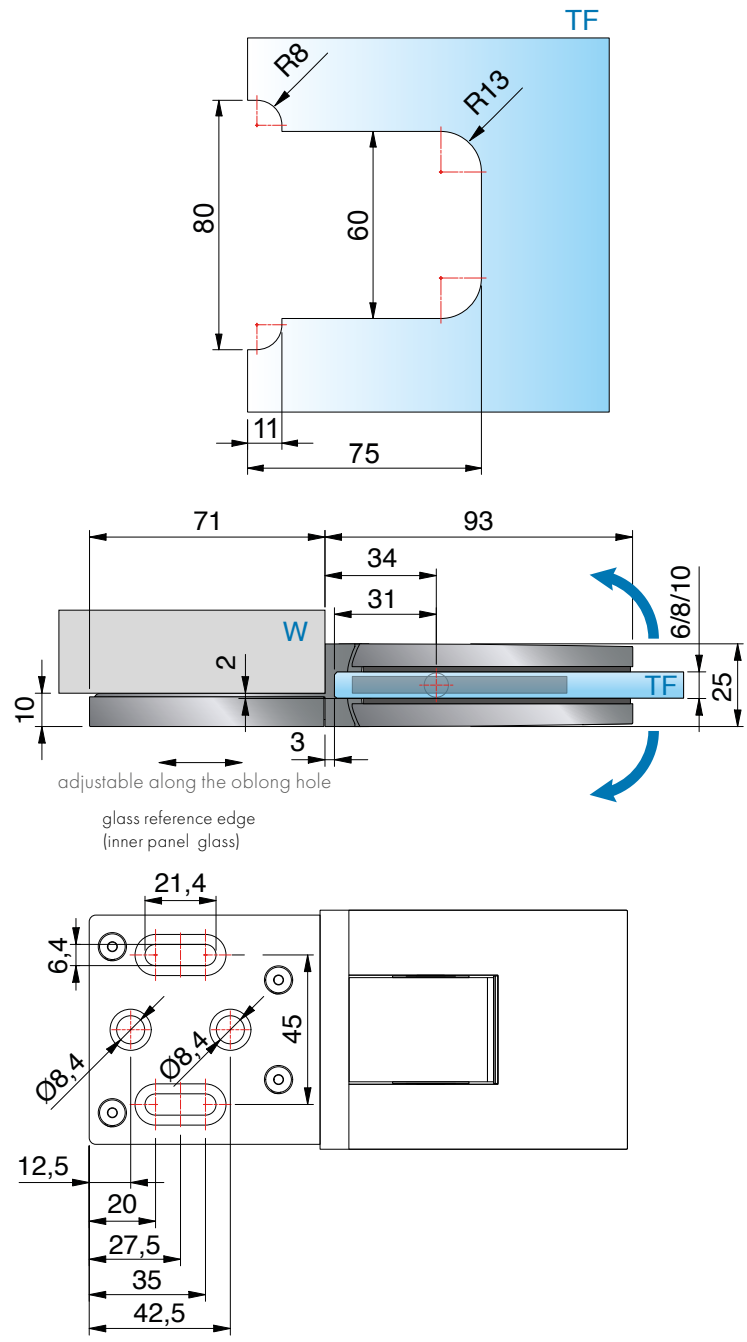

ST = side panel I TF = door panel I W = wall

8310ZN glass-wall 180°

MADE IN GERMANY



with seal profile 8861KU0-8-2010(2500), for 8 mm glass

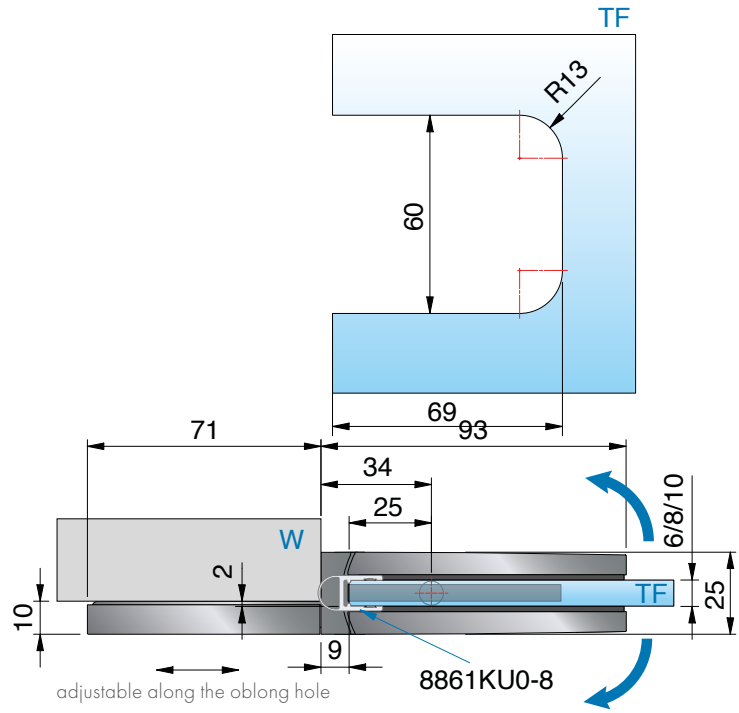



with seal profile 8862KU0-8-2010(2500), for 8 mm glass

ST = side panel I TF = door panel I W = wall

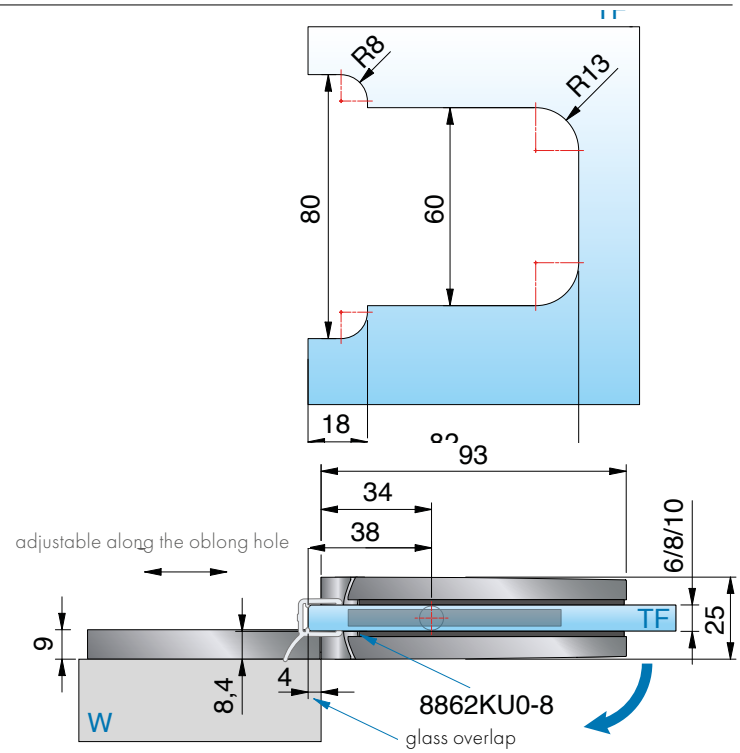

8310ZN glass-wall 180°

MADE IN GERMANY



enlarged opening angle: opening angle of the hinge 115° possible on both sides and is therefore very well suited for barrier-free areas.

8312ZN glass-glass 180°

MADE IN GERMANY



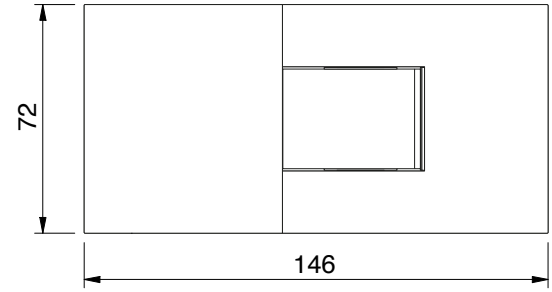

features
115° opening in both directions, adjustment with cover cap, infinitely adjustable closed-position, self-closing on the last centimetres, sealing profile interrupted on the hardware side in the hinge area, Load capacity (2 hinges) 50 kg (max. door panel width 1000 mm)

article no	glass thickness
8312__	6*/8/10* mm

finish		
	ZN5	gloss chrome
	ZNPVD22	stainless steel optic
	ZN134	white matt
	ZN135	deep black matt
	ZNPVD39	gold bronze brushed
	ZNPVD40	gold optic brushed
	ZNPVD41	copper optic brushed
	ZNPVD42	graphite metal optic brushed



*important
when using the hinges for 6 or 10 mm glass, please order the insert-set art. no. HZ-SET12 free of charge.
You can request the glass processing for 6 or 10 mm glass from our technical department.



enlarged opening angle: opening angle of the hinge 115° possible on both sides

8312ZN glass-glass 180°

MADE IN GERMANY



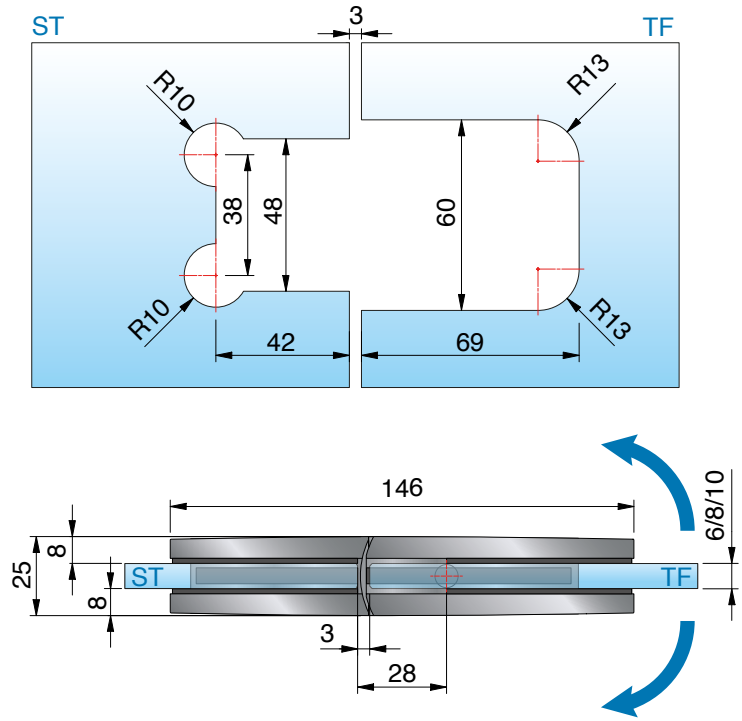

without seal profile, for 8 mm glass



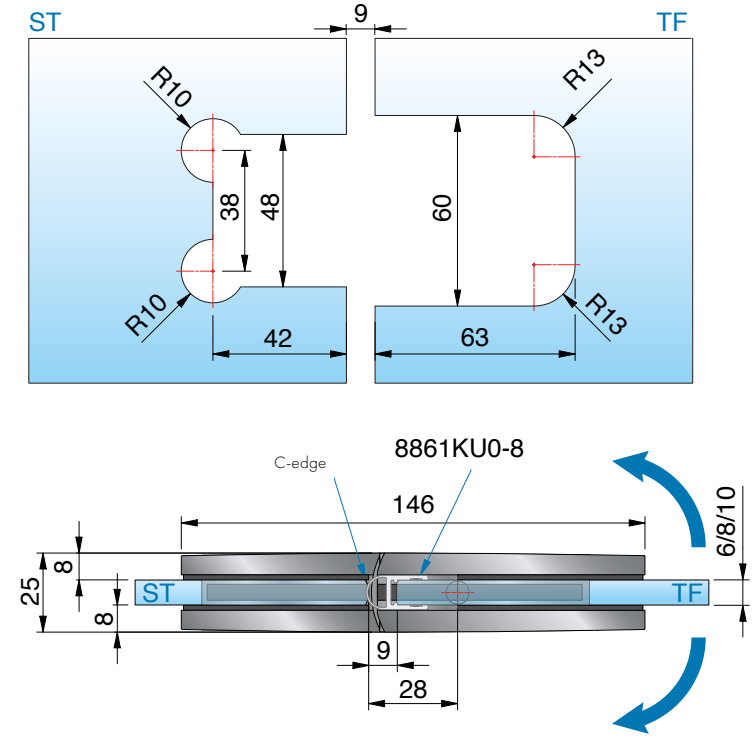

with seal profile 8861KU0-8-2010(2500), for 8 mm glass

ST = side panel I TF = door panel I W = wall

8312ZN glass-glass 180°

MADE IN GERMANY



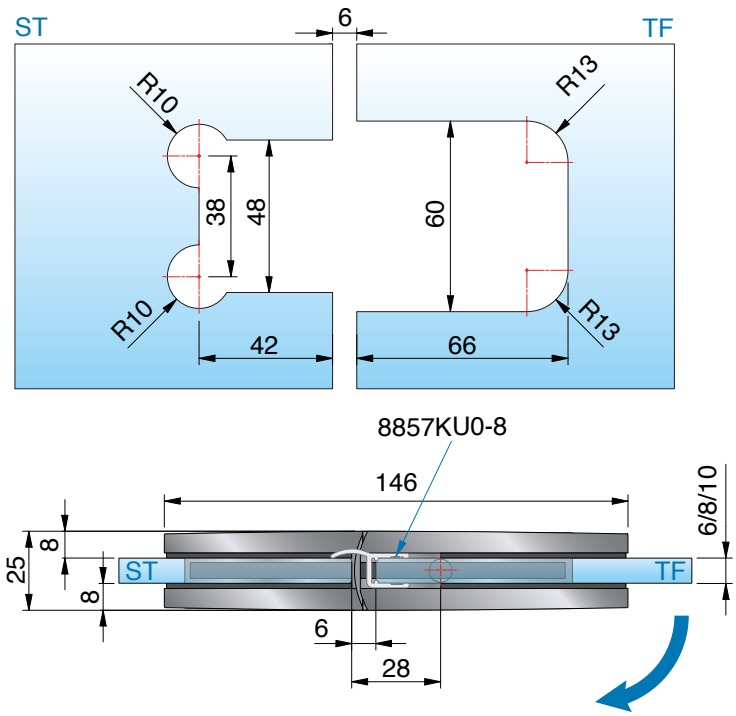

with seal profile 8857KU0-8-2010(2500)(2500), for 8 mm glass



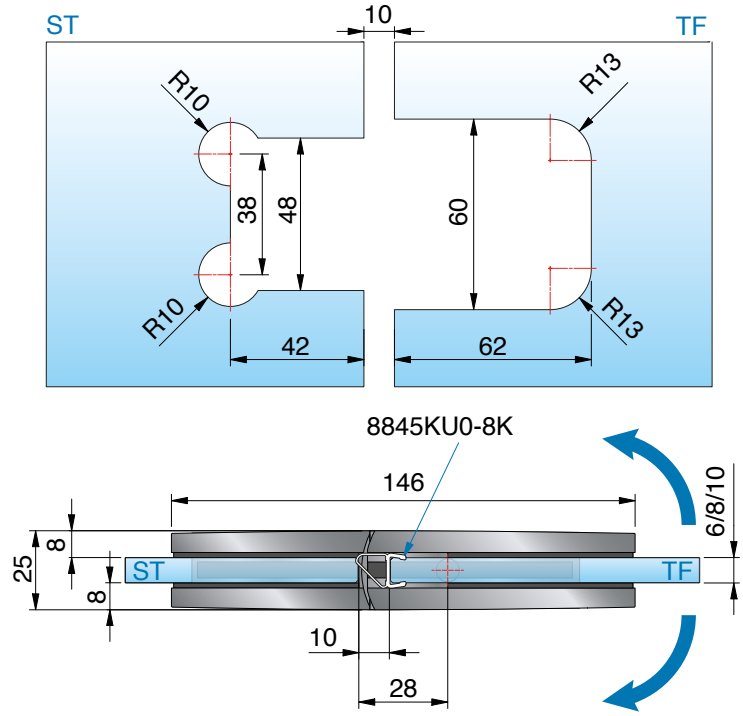

with seal profile 8845KU0-K8-2500, for 8 mm glass

ST = side panel I TF = door panel I W = wall

8312ZN glass-glass 180°

MADE IN GERMANY



8315ZN glass-glass 90°

MADE IN GERMANY



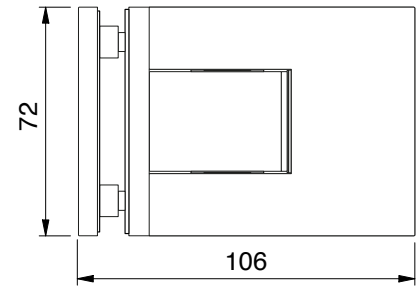

features

115° opening in both directions, one-sided mounting bracket, with cover cap, infinitely adjustable closed-position, self-closing on the last centimetres, sealing profile interrupted on the hardware side in the hinge area, Load capacity (2 hinges) 50 kg (max. door panel width 1000 mm)

article no	glass thickness
8315__	6*/8/10* mm

finish		
	ZN5	gloss chrome
	ZNPVD22	stainless steel optic
	ZN134	white matt
	ZN135	deep black matt
	ZNPVD39	gold bronze brushed
	ZNPVD40	gold optic brushed
	ZNPVD41	copper optic brushed
	ZNPVD42	graphite metal optic brushed



*important

when using the hinges for 6 or 10 mm glass, please order the insert-set art. no. HZ-SET12 free of charge.
You can request the glass processing for 6 or 10 mm glass from our technical department.



8315ZN glass-glass 90°

MADE IN GERMANY



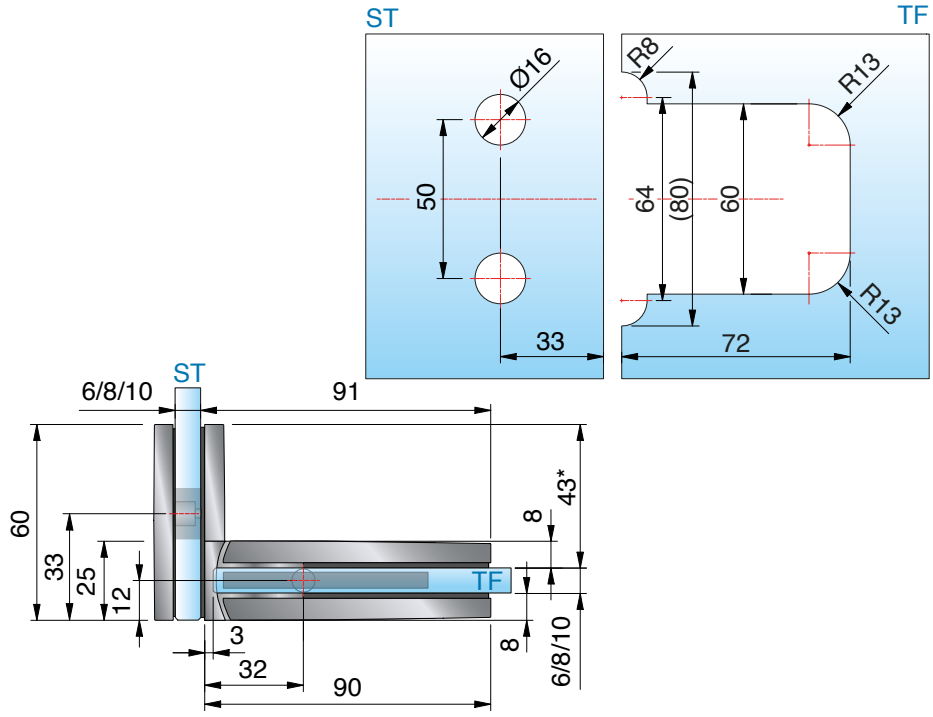

without seal profile, *glass processing for 8 mm

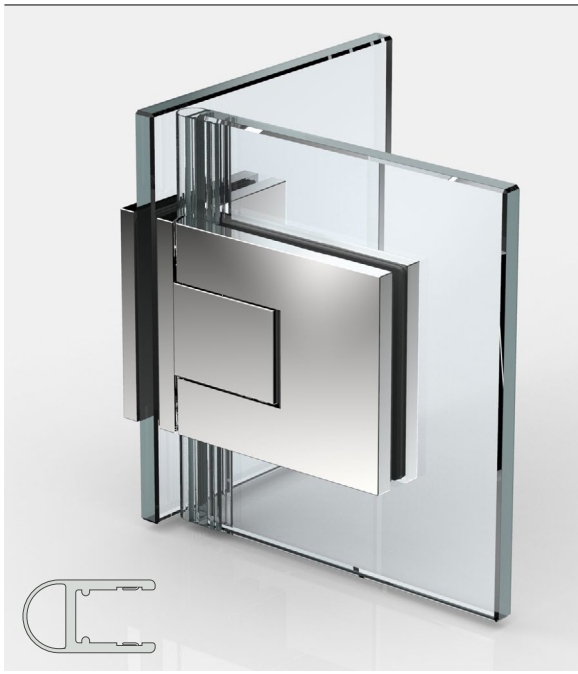

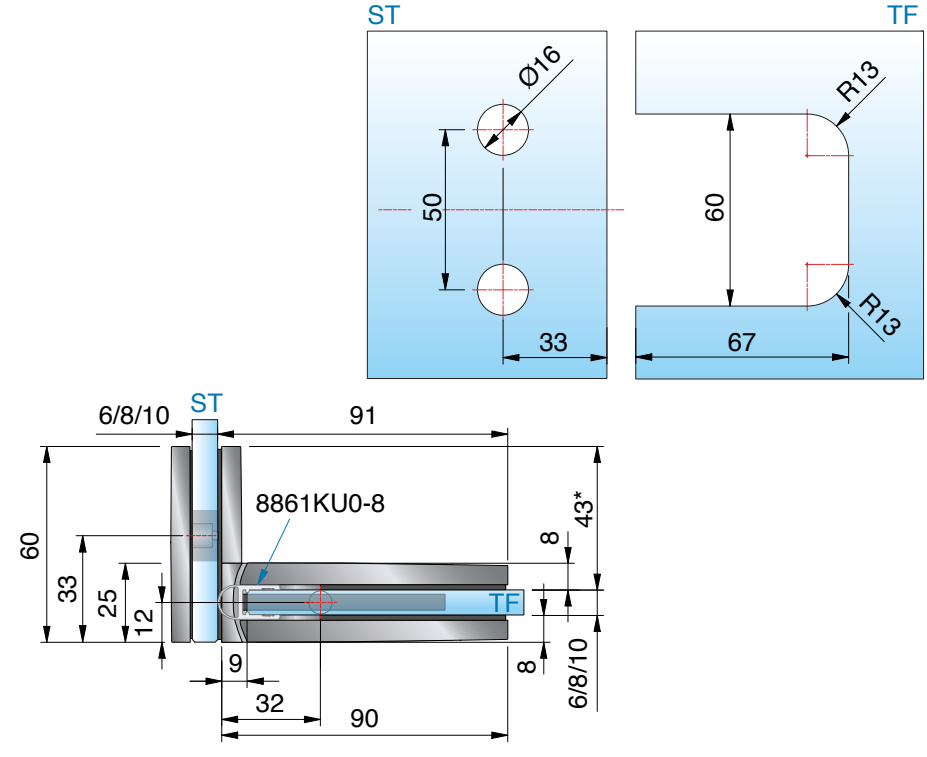

with seal profile 8861KU0-8-2010(2500), *glass processing for 8 mm

ST = side panel I TF = door panel I W = wall

8315ZN glass-glass 90°

MADE IN GERMANY



without seal profile, for 8 mm glass

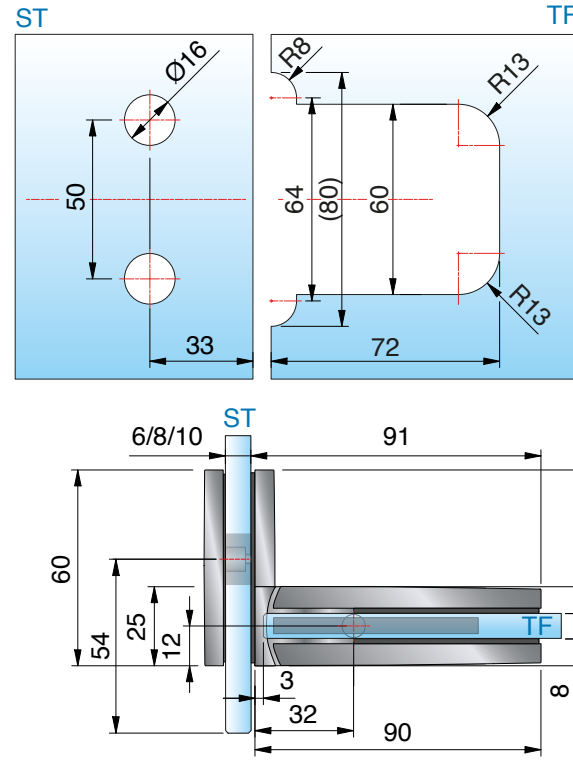

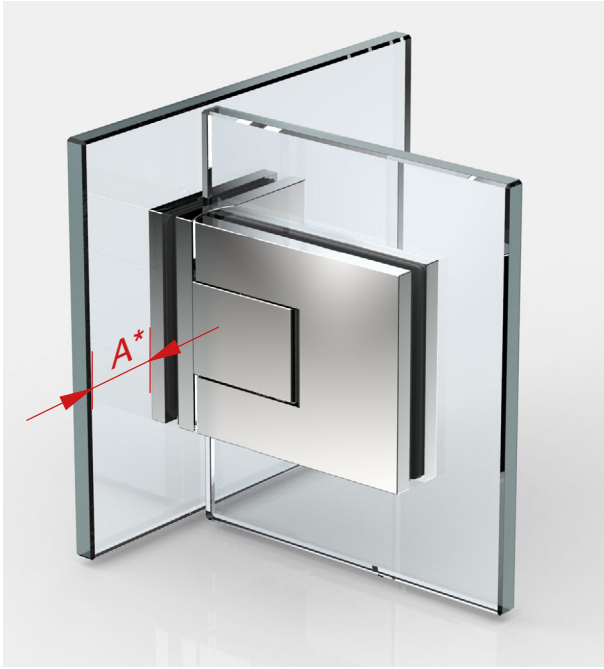



For glass-glass 90°, only drilled holes are required in the side panel, so that the glass door panel is set inwards and the overhang (A) can be determined by the installer.

8315ZN glass-glass 90°

MADE IN GERMANY



with seal profile 8861KU0-8-2010(2500), for 8 mm glass

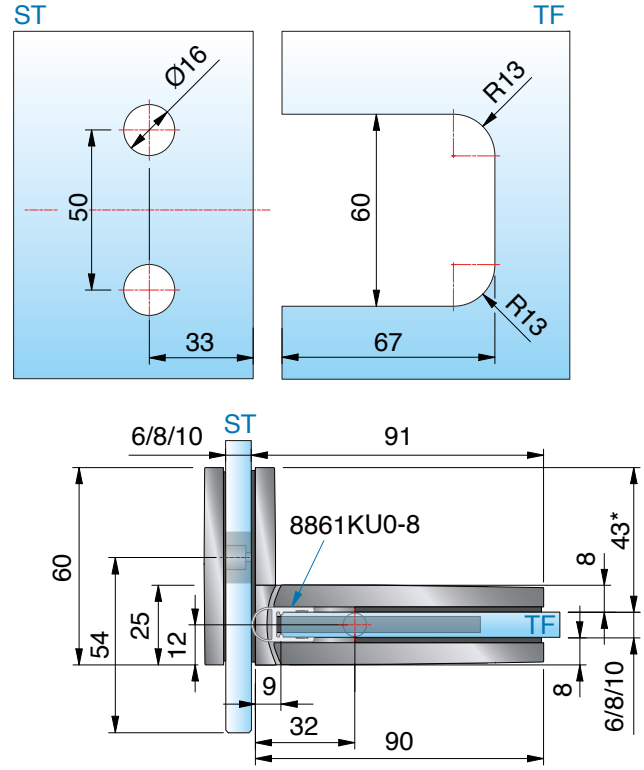

ST = side panel I TF = door panel I W = wall

8311ZN glass-glass 90°

MADE IN GERMANY



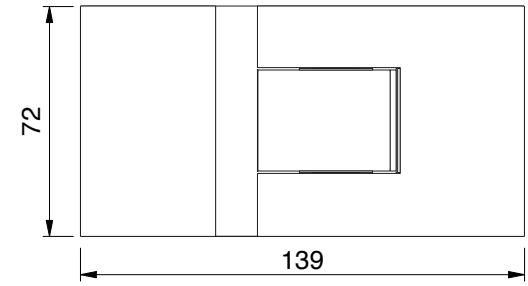

article no	glass thickness
8311__	6*/8/10* mm



finish		
	ZN5	gloss chrome
	ZNPVD22	stainless steel optic
	ZN134	white matt
	ZN135	deep black matt
	ZNPVD39	gold bronze brushed
	ZNPVD40	gold optic brushed
	ZNPVD41	copper optic brushed
	ZNPVD42	graphite metal optic brushed

features

115° opening in both directions, one-sided mounting bracket, with cover cap, infinitely adjustable closed-position, self-closing on the last centimetres, sealing profile interrupted on the hardware side in the hinge area, Load capacity (2 hinges) 50 kg (max. door panel width 1000 mm)

*important

when using the hinges for 6 or 10 mm glass, please order the insert-set art. no. HZ-SET12 free of charge.
You can request the glass processing for 6 or 10 mm glass from our technical department.

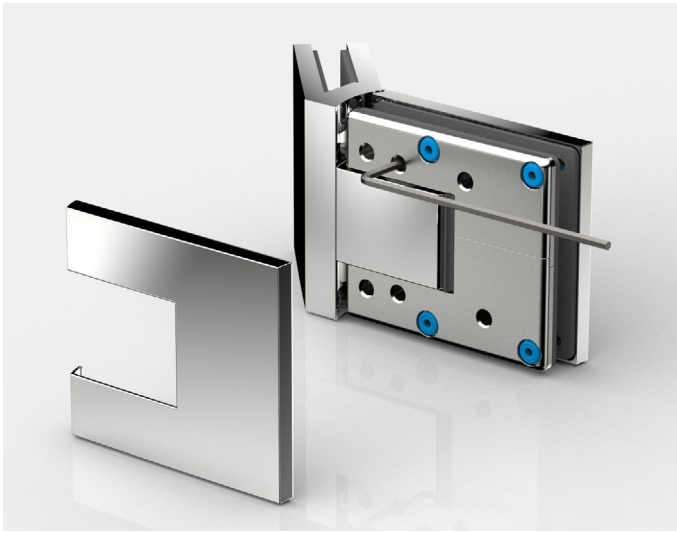

8311ZN glass-glass 90°

MADE IN GERMANY



without seal profile, for 8 mm glass

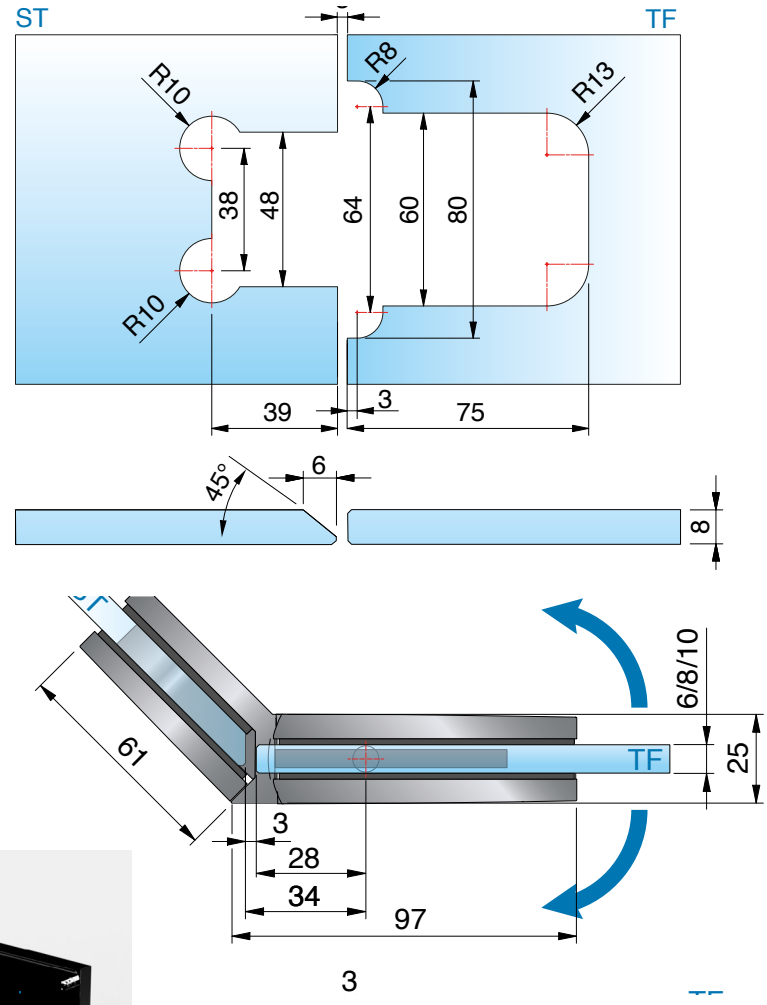



ST = side panel I TF = door panel I W = wall

8311ZN glass-glass 90°

MADE IN GERMANY



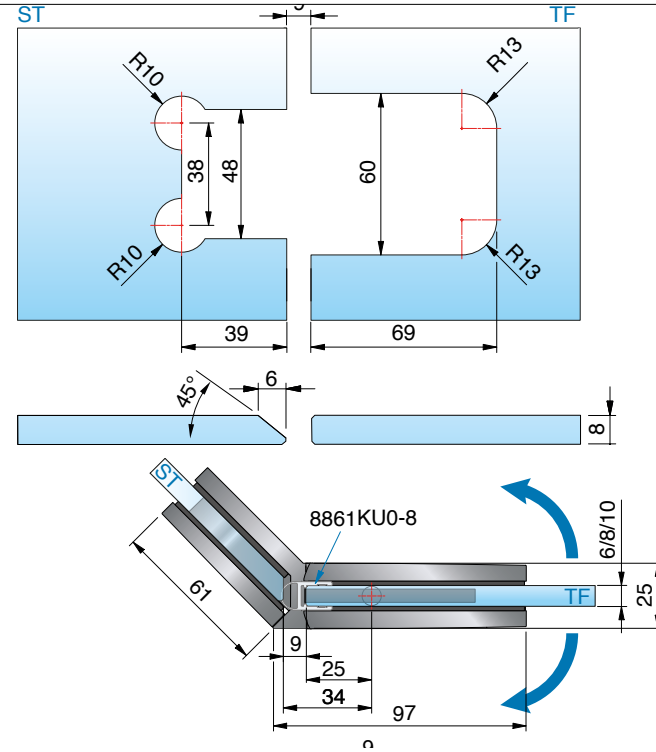

with seal profile 8861KU0-8-2010(2500), for 8 mm glass



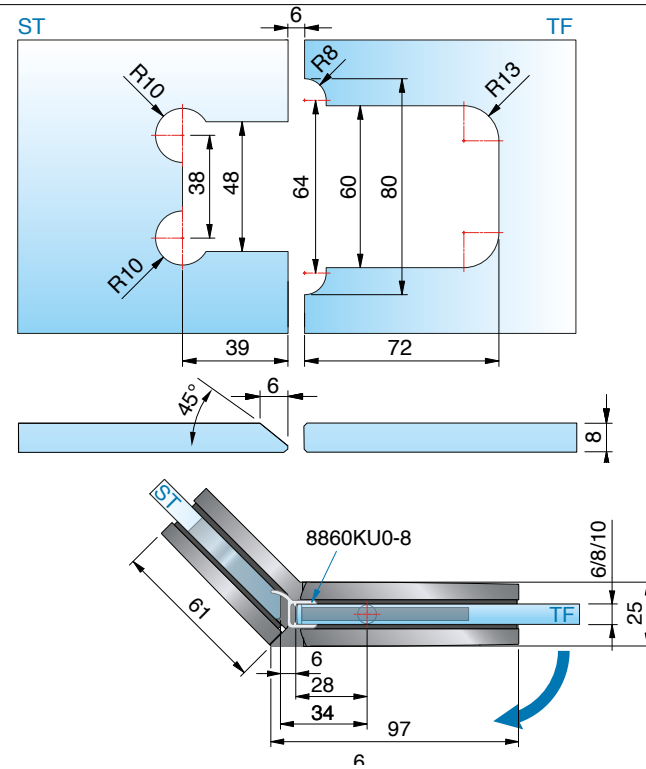

with seal profile 8860KU0-8-2010(2500), for 8 mm glass

ST = side panel I TF = door panel I W = wall

8311ZN glass-glass 90°

MADE IN GERMANY



8302ZN Glas-Glas 90° - adjustable

MADE IN GERMANY



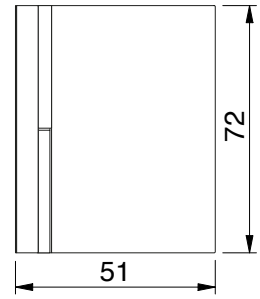

features

wall bracket adjustable along the oblong hole, degree of angle is fully adjustable between 60-100°

You can request the glass processing for 6 or 10 mm glass from our technical department.

article no	glass thickness
8302__	6/8/10 mm

finish	
ZN5	gloss chrome
ZNPVD22	stainless steel optic
ZN134	white matt
ZN135	deep black matt
ZNPVD39	gold bronze brushed
ZNPVD40	gold optic brushed
ZNPVD41	copper optic brushed
ZNPVD42	graphite metal optic brushed

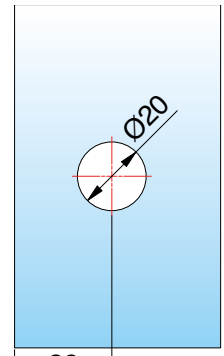

hole dimension Ø 20 mm
glass processing for 8 mm
with other angles the miter angle and/or hole distance is changing according to chart.

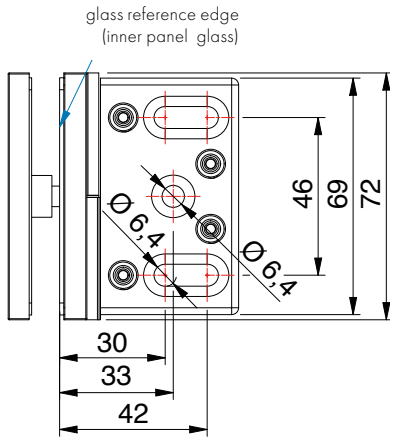

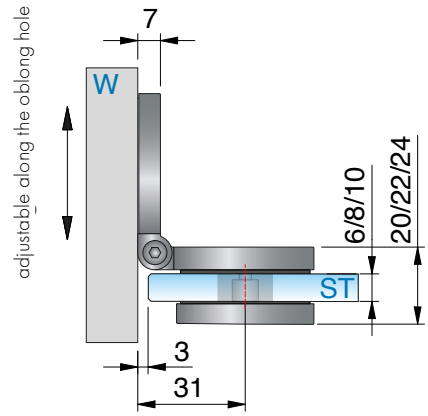

ST = side panel I TF = door panel I W = wall

8302ZN Glas-Glas 90° - adjustable

MADE IN GERMANY





Compensate for sloping walls from 60° to 100° with the adjustable angle connector.



miter angle and hole distances for 8302ZN

corner	hole distance from glass edge	miter angle	remarks
60°	37 mm	30°	-
65°	35 mm	25°	-
70°	34 mm	20°	-
75°	32 mm	15°	-
80°	31 mm	10°	-
85°	29 mm	5°	-
90°	28 mm	without miter angle	hole slotted
95°	28 mm	5°	hole slotted
100°	27 mm	10°	hole slotted

8316ZN glass-wall 90° - fixed

MADE IN GERMANY



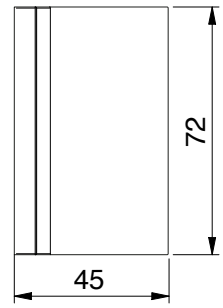

features
wall bracket adjustable along the oblong hole

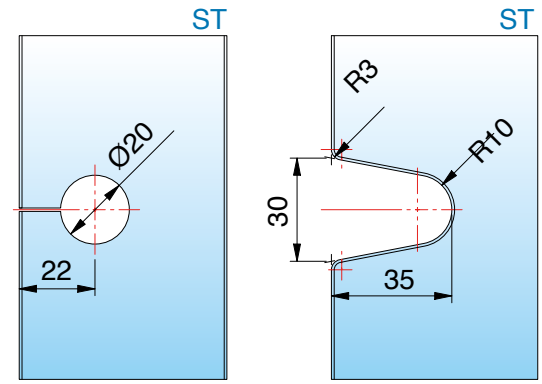

glass processing Ø20 6/8/10 edge recess R35

article no	glass thickness
8316__	6/8/10 mm

finish	
ZN5	gloss chrome
ZNPVD22	stainless steel optic
ZN134	white matt
ZN135	deep black matt
ZNPVD39	gold bronze brushed
ZNPVD40	gold optic brushed
ZNPVD41	copper optic brushed
ZNPVD42	graphite metal optic brushed



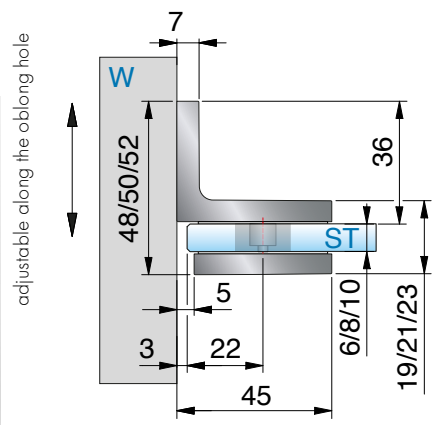

glass reference edge
(inner panel glass)

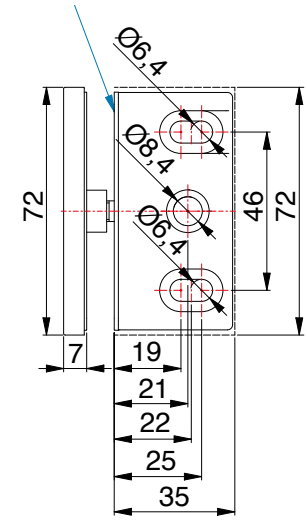

ST = side panel I TF = door panel I W = wall

8318ZN glass-wall 180° - fixed

MADE IN GERMANY



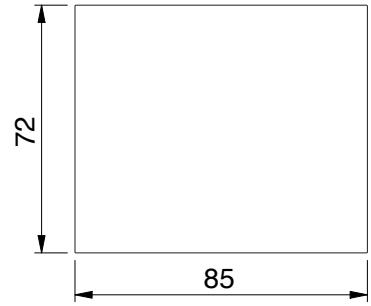

features
wall bracket adjustable along the oblong hole

article no	glass thickness
8318__	6/8/10 mm

finish		
	ZN5	gloss chrome
	ZNPVD22	stainless steel optic
	ZN134	white matt
	ZN135	deep black matt
	ZNPVD39	gold bronze brushed
	ZNPVD40	gold optic brushed
	ZNPVD41	copper optic brushed
	ZNPVD42	graphite metal optic brushed



ST

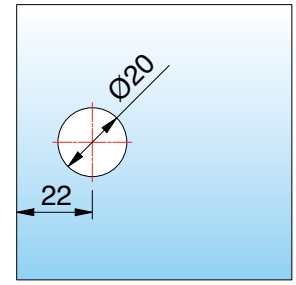

glass processing for 6/8/10 mm
hole dimension Ø 20 mm

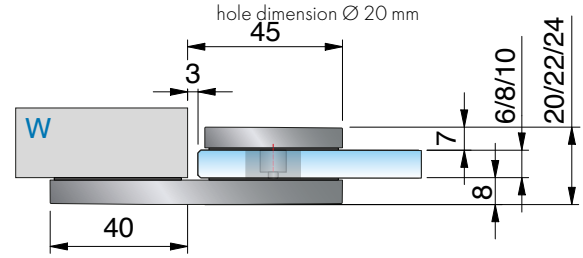



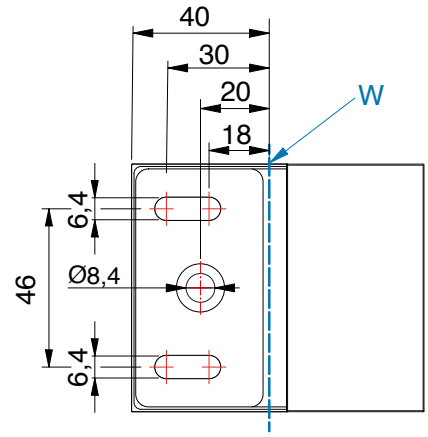

ST = side panel I TF = door panel I W = wall

8303ZN glass-wall 135° - adjustable



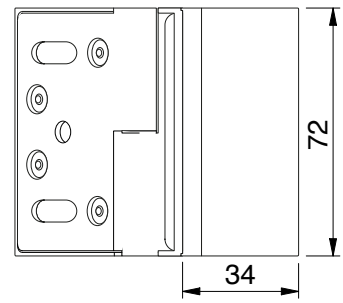

features

wall bracket adjustable along the oblong hole, degree of angle is fully adjustable between 60-100°

You can request the glass processing for 6 or 10 mm glass from our technical department.

article no	glass thickness
8303__	6/8/10 mm



finish		
	ZN5	gloss chrome
	ZNPVD22	stainless steel optic
	ZN134	white matt
	ZN135	deep black matt
	ZNPVD39	gold bronze brushed
	ZNPVD40	gold optic brushed
	ZNPVD41	copper optic brushed
	ZNPVD42	graphite metal optic brushed

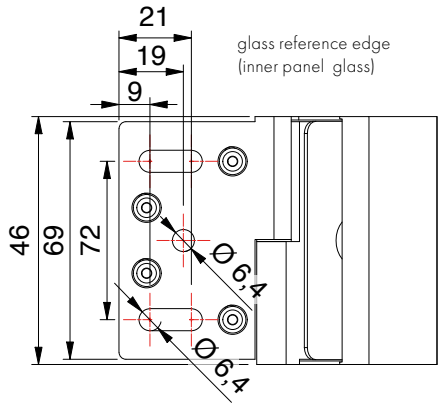

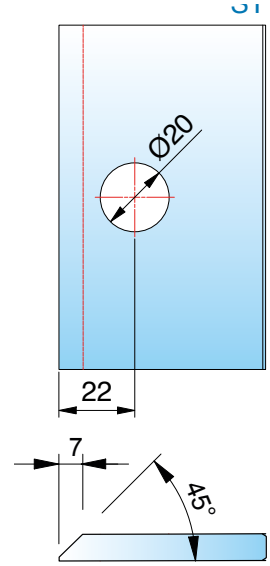

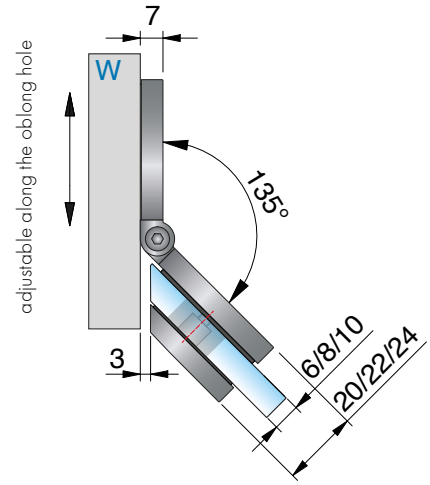

hole dimension Ø 20 mm
glass processing for 8 mm
with other angles the miter angle and/or hole distance is changing according to chart.

ST = side panel I TF = door panel I W = wall

8303ZN glass-glass 90° - adjustable

MADE IN GERMANY





Compensate for sloping walls from 60° to 100° with the adjustable angle connector.



miter angle and hole distances for 8303ZN

corner	hole distance from glass edge	miter angle	remarks
60°	27 mm	10°	-
65°	26 mm	15°	-
70°	26 mm	20°	-
75°	258 mm	25°	hole slotted
80°	24 mm	30°	hole slotted
85°	24 mm	35°	hole slotted
90°	23 mm	40°	hole slotted
95°	22 mm	45°	hole slotted
100°	20 mm	50°	hole slotted

8317ZN Glas-Glas 90°

MADE IN GERMANY



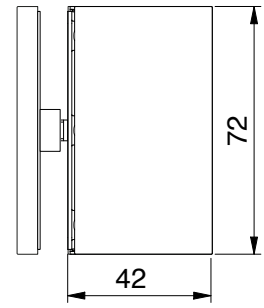

features

wall bracket adjustable along the oblong hole, degree of angle is fully adjustable between 60-100°

You can request the glass processing for 6 or 10 mm glass from our technical department.

article no	glass thickness
8317__	6/8/10 mm

finish	
ZN5	gloss chrome
ZNPVD22	stainless steel optic
ZN134	white matt
ZN135	deep black matt
ZNPVD39	gold bronze brushed
ZNPVD40	gold optic brushed
ZNPVD41	copper optic brushed
ZNPVD42	graphite metal optic brushed

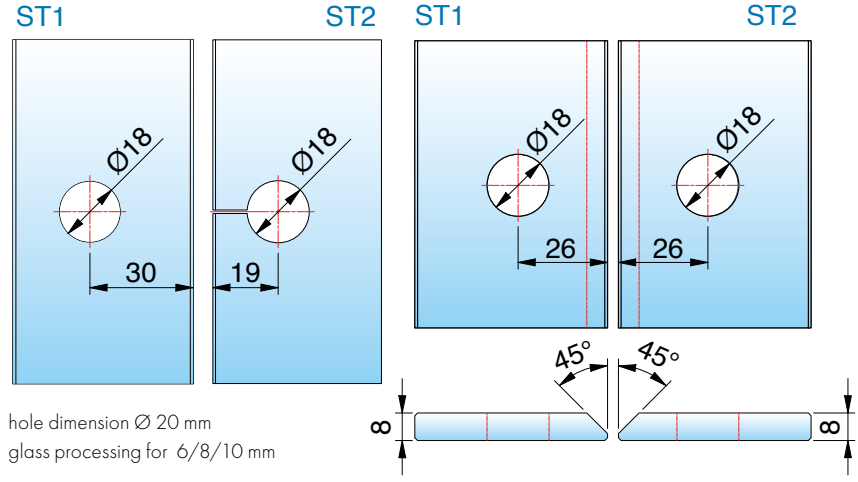

hole dimension Ø 20 mm

glass processing for 6/8/10 mm



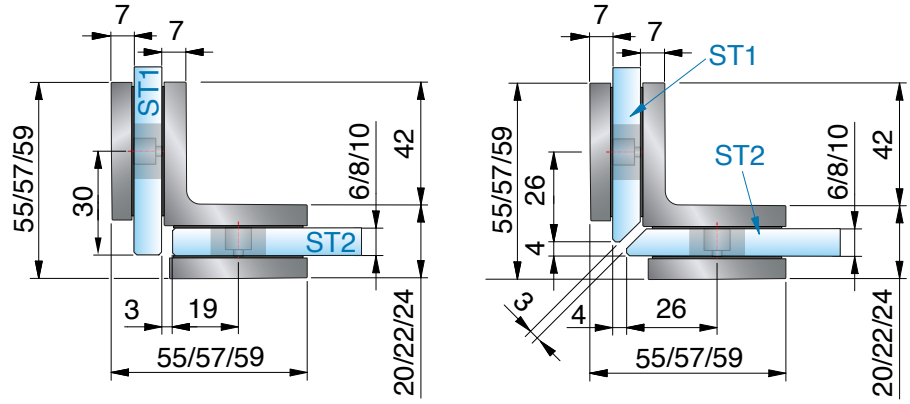

ST = side panel I TF = door panel I W = wall

8319ZN Glas-Glas 180° - fixed

MADE IN GERMANY



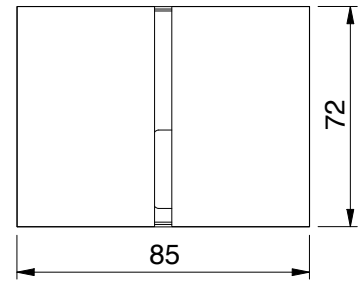

article no	glass thickness
8319__	6/8/10 mm

finish		
	ZN5	gloss chrome
	ZNPVD22	stainless steel optic
	ZN134	white matt
	ZN135	deep black matt
	ZNPVD39	gold bronze brushed
	ZNPVD40	gold optic brushed
	ZNPVD41	copper optic brushed
	ZNPVD42	graphite metal optic brushed



hole dimension Ø 20 mm

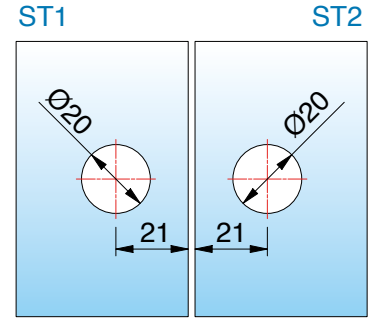

glass processing for 6/8/10 mm



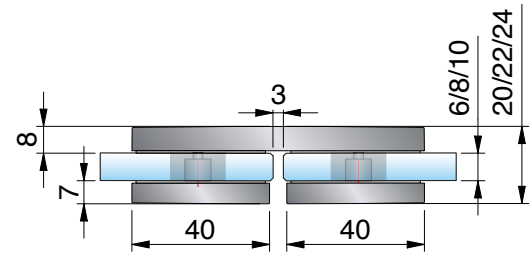

ST = side panel I TF = door panel I W = wall

8301ZN Glas-Glas 180° - adjustable

MADE IN GERMANY



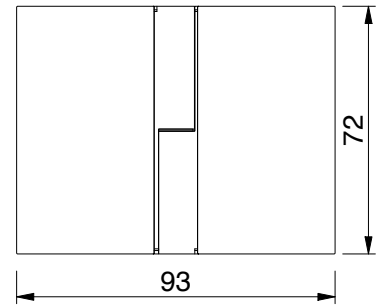

features

wall bracket adjustable along the oblong hole, degree of angle is fully adjustable between 80-180°

You can request the glass processing for 6 or 10 mm glass from our technical department.

article no	glass thickness
8301 __	6/8/10 mm

finish		
	ZN5	gloss chrome
	ZNPVD22	stainless steel optic
	ZN134	white matt
	ZN135	deep black matt
	ZNPVD39	gold bronze brushed
	ZNPVD40	gold optic brushed
	ZNPVD41	copper optic brushed
	ZNPVD42	graphite metal optic brushed



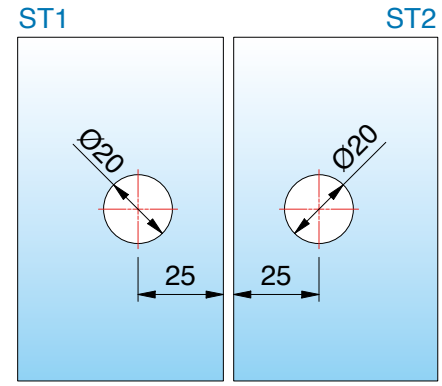

hole dimension Ø 20 mm
glass processing for 8 mm

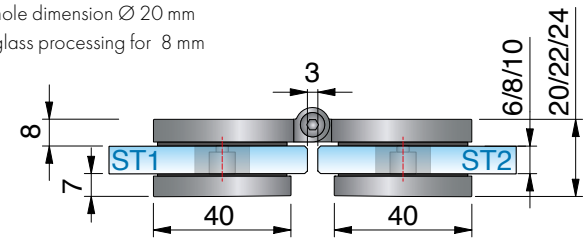

ST = side panel I TF = door panel I W = wall

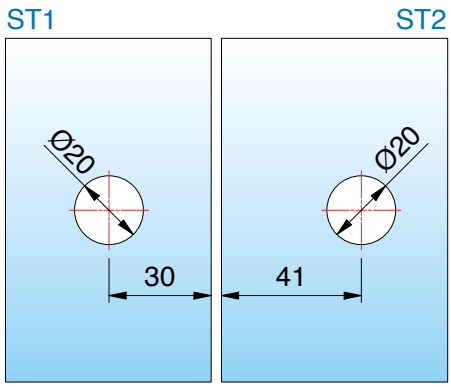

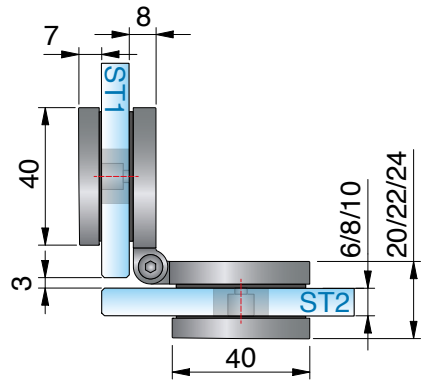

8301ZN Glas-Glas 180° - adjustable

MADE IN GERMANY





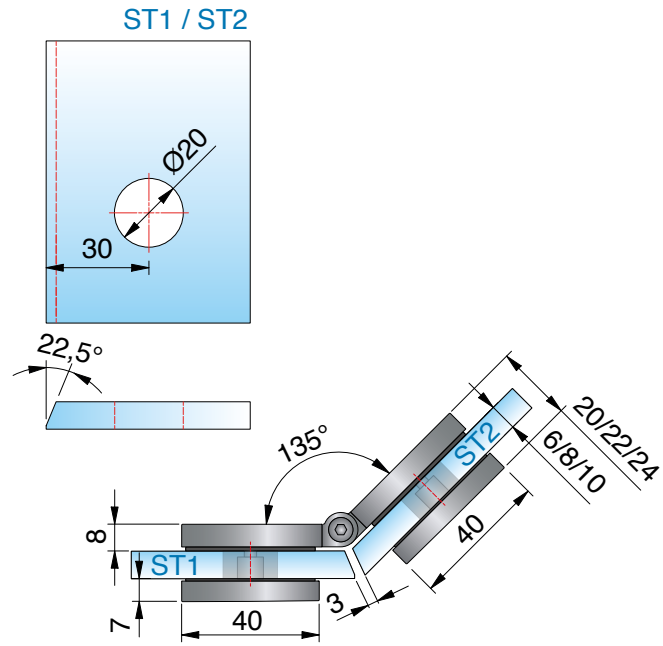

miter angle and hole distances for 8301ZN

corner	hole distance from glass edge	miter angle	remarks
80°	40 mm	50°	-
85°	38 mm	47,5°	-
90°	37 mm	45°	-
95°	36 mm	42,5°	-
100°	35 mm	40°	-
105°	35 mm	37,5°	-
110°	34 mm	35°	-
115°	33 mm	32,5°	-
120°	32 mm	30°	-
125°	31 mm	27,5	-
130°	31 mm	25°	-
135°	30 mm	22,5°	-
140°	30 mm	20°	-
145°	29 mm	17,5°	-
150°	28 mm	15°	-
155°	28 mm	12,5°	-
160°	27 mm	10°	-
165°	27 mm	7,5°	-
170°	26 mm	5°	-
175v	25 mm	0°	hole slotted
180°	25 mm	0°	hole slotted

available **surface colors**



ZN5
gloss chrome

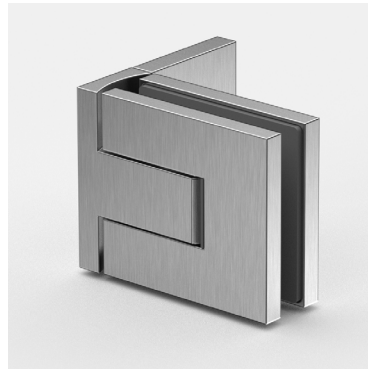

ZNPVD22
stainless steel optic

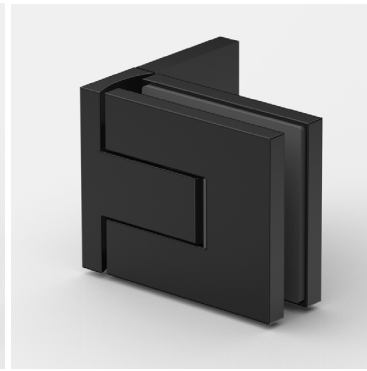

ZN135
deep black matt



ZNPVD39
gold bronze brushed



ZNPVD40
gold optic brushed

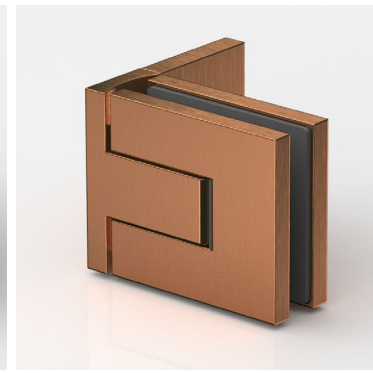

ZNPVD41
copper optic brushed

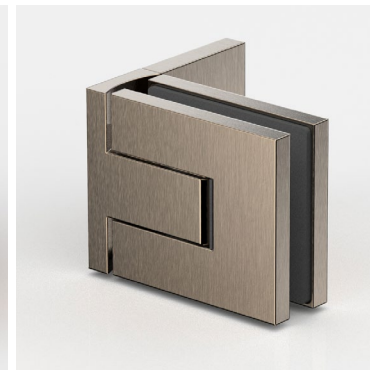

ZNPVD42
graphite metal optic brushed

compatibility chart for fittings manufacturer colors see page 14













corresponding **angle brackets**

for FLAMEA pro can be found on page 126.

MADE
IN
GERMANY



FLAMEA pro

shower swing door hinge



FLAMEA pro – small format, high performance

MADE IN GERMANY

Flamea pro represents the next generation of our renowned Flamea+ shower door hinge.

Through continuous development and the application of ourextensive experience as a leading manufacturer of shower hardware,we ensure the highest technical standards.

The result is a product that stands out for its even greater reliability,sturdiness, and durability.

Installation convenience has been further optimized in many details to enable an even simpler, more reliable, and more cost-effective installation.

The timeless, minimalist design combines the highest aesthetic standards withmaximum user-friendliness and sets new benchmarks in shower and sauna design.

- Load capacity (2 hinges): max. allowable weight: 47 kg, max. door panel width: 1000 mm
- Glass thickness: 8/10 mm
- Swing door hinge: glass–wall / glass–glass
- Matching angle brackets
- Seal profile discontinued in the hinge area
- Optimized for installation even without seal profiles
- 97° opening angle in both directions for greater convenience
- Minimized gap dimensions
- Self-closing over the last few centimeters
- Convenient installation thanks to innovative cap technology
- Concealed closed-position adjustment
- Applications:
  Use in private residential construction, commercial buildings, and hotels
- Durability of the hardware tested through in-house trials in accordance with
  DIN EN 14428:2015/A1:2018 5.5 and TR24

innovative techniques

MADE IN GERMANY

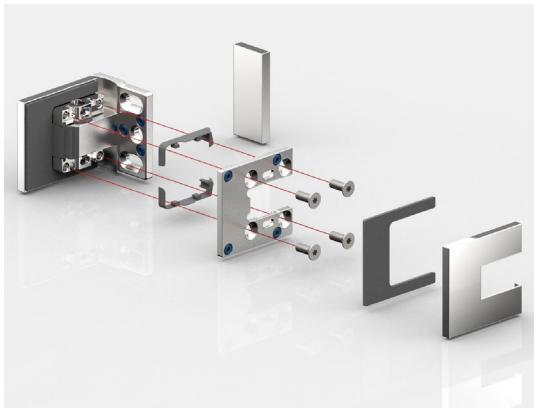

- **Hinge body and counter plate**
  Form-fitting interlocking in the fitting body and 4-fold screw connection with TX 25 drive for maximum contact pressure

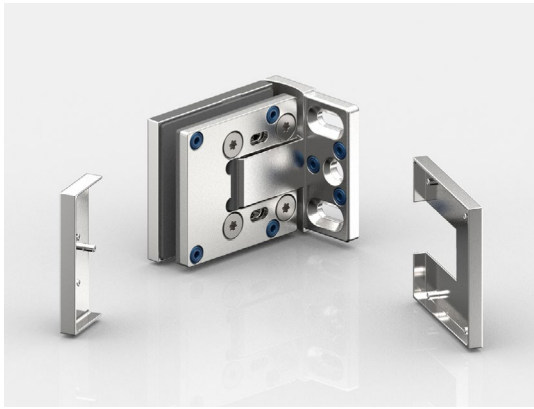

- **Easy-to-install cover:**
  To secure the cover caps, they can be quickly and easily inserted into the pre-assembled EPDM moulded parts using the pins and pressed down. To protect the caps against theft, adhesive dots are also available to secure them in place. The caps cover all mounting elements for easy maintenance and cleaning.



- **new close position technology:**
  Spreading the axle fixes the zero position in the belt and can be adjusted as often as required.

Please note that the instruction manual at www.pauli.de.





- also available as saunahinge (see page 380)

innovative techniques

MADE IN GERMANY



- **Increased opening angle:** The hinge can be opened up to 97° on both sides.

innovative techniques

MADE IN GERMANY

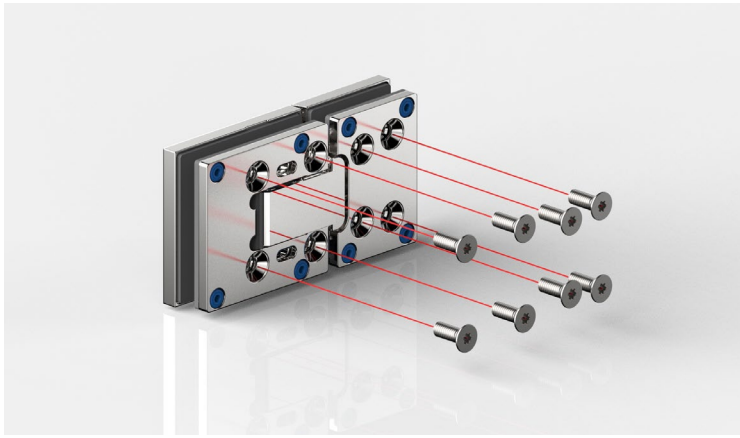

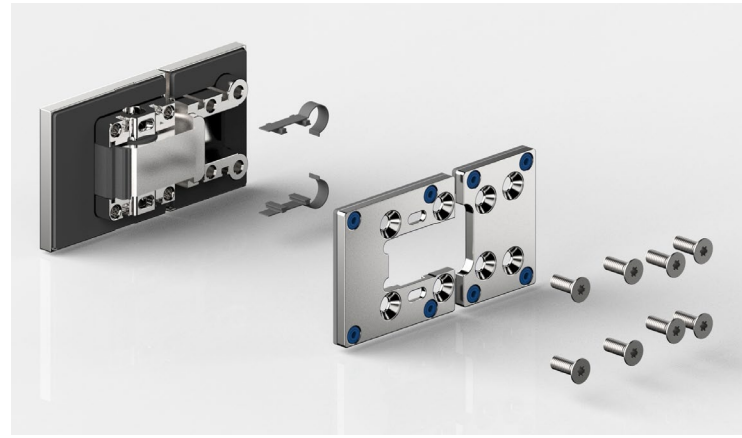

- Fitting body and counterplate interlock in the fitting body and 8-fold screw connection
  with TX 25 drive for maximum contact pressure



- **increased opening angle:**
  - The hinge can be opened up to 97° on both sides.
  - Very well suited for barrier-free areas
  - easier access even in small bathrooms
  - Safety reserves against incorrect operation
  - Preventing doors from being pushed too hard

8340ZN glass-wall 90°

MADE IN GERMANY



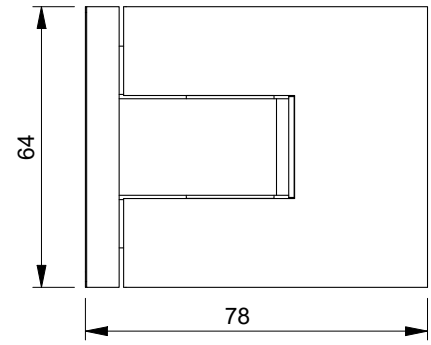

article no.	glass thickness
8340__	8/10* mm

finish		
	ZN5	gloss chrome
	ZNPVD22	stainless steel optic
	ZN135	deep black matt
	ZNPVD39	gold bronze brushed
	ZNPVD40	gold optic brushed
	ZNPVD41	copper optic brushed
	ZNPVD42	graphite metal optic brushed

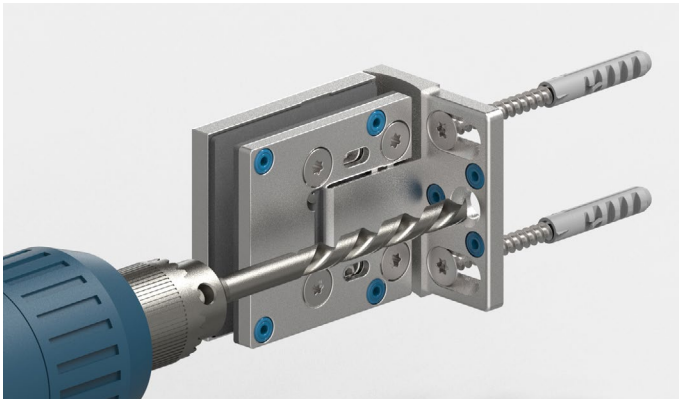

The 3rd fixing hole prevents the fittings from twisting on the wall. The shower hinge is designed in such a way that this hole can be drilled with an 8 mm drill bit while mounted.

features

97° opening in both directions, one-sided mounting bracket, oblong hole, slotted hole adjustment with cover cap, infinitely adjustable closed-position, self-closing on the last centimetres, sealing profile interrupted on the hardware side in the hinge area, Load capacity (2 hinges) 47 kg (max. door panel width 1000 mm)

*important

when using the hinges for 10 mm glass, please order the insert-set:
for **10 mm glass insert-set art. no. HZ-SET24**
*You can request the glass processing for 10 mm glass from our technical department.

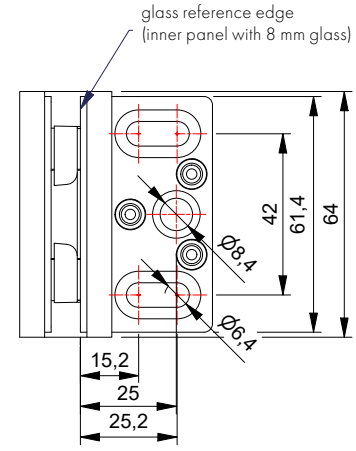

8340ZN glass-wall 90°

MADE IN GERMANY



without seal profile, *glass processing for 8 mm

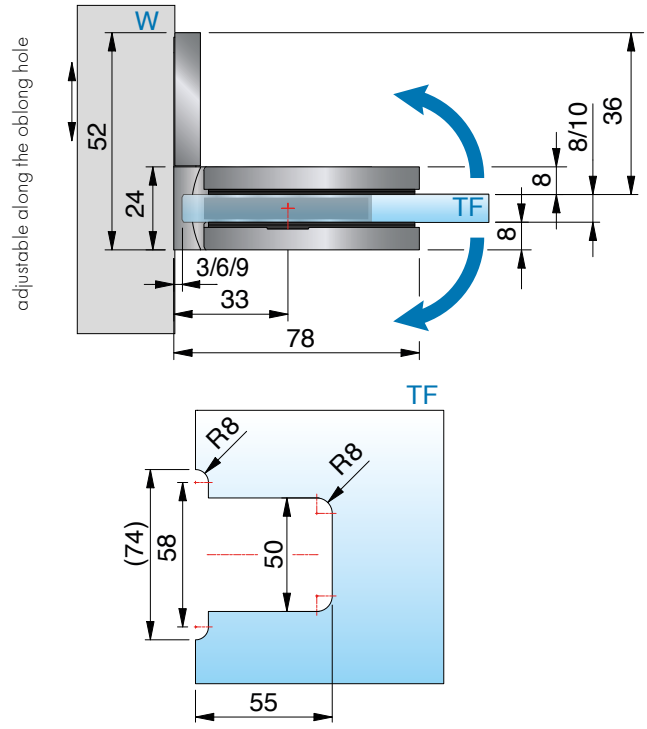



with seal profile 8861KU0-8-2010, *glass processing for 8 mm

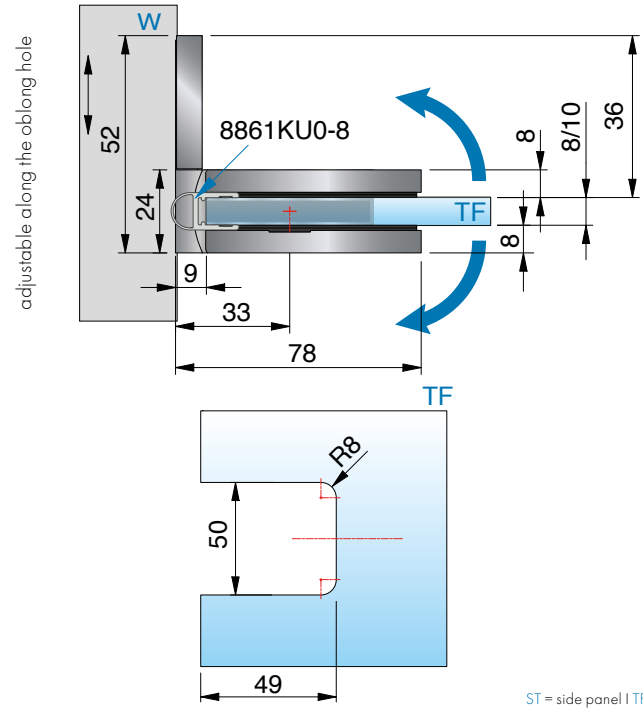

ST = side panel I TF = door panel I W = wall

8346ZN glass-wall 90°

MADE IN GERMANY



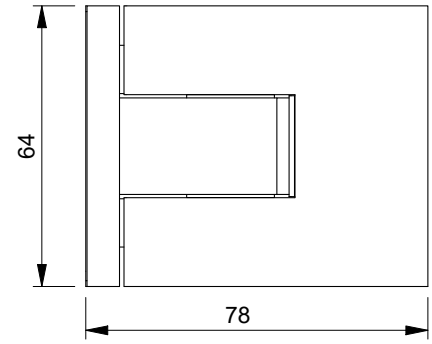

article no.	glass thickness
8346__	8/10* mm



finish		
	ZN5	gloss chrome
	ZNPVD22	stainless steel optic
	ZN135	deep black matt
	ZNPVD39	gold bronze brushed
	ZNPVD40	gold optic brushed
	ZNPVD41	copper optic brushed
	ZNPVD42	graphite metal optic brushed

features

97° opening in both directions, one-sided mounting bracket, oblong hole, slotted hole adjustment with cover cap, infinitely adjustable closed-position, self-closing on the last centimetres, sealing profile interrupted on the hardware side in the hinge area, Load capacity (2 hinges) 47 kg (max. door panel width 1000 mm)

*important

when using the hinges for 10 mm glass, please order the insert-set:
for **10 mm glass insert-set art. no. HZ-SET24**
*You can request the glass processing for 10 mm glass from our technical department.

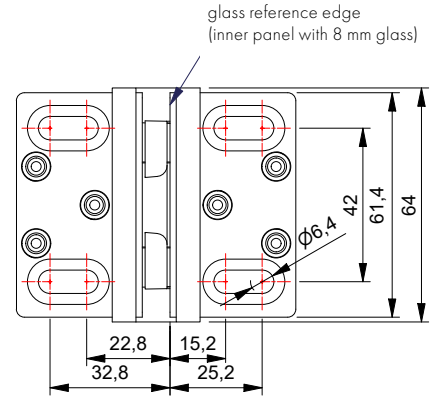

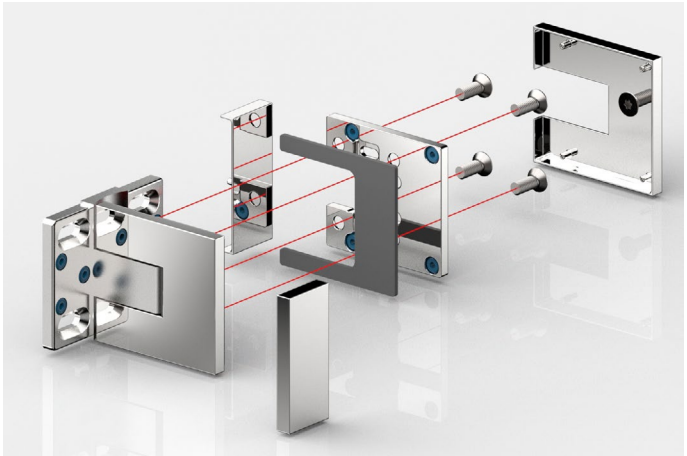

Fitting body and counterplate interlock in the fitting body and 4-point screw connection with TX 30 drive for maximum contact pressure

8346ZN glass-wall 90°

MADE IN GERMANY



without seal profile, *glass processing for 8 mm

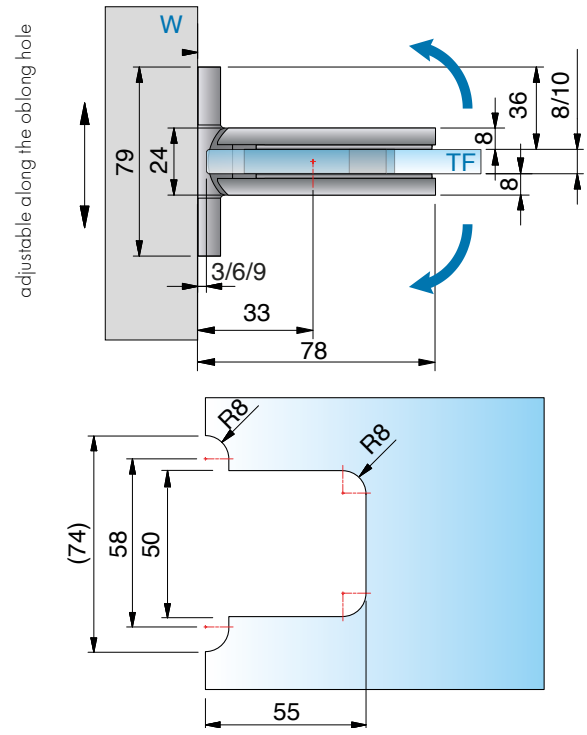



with seal profile 8861KU0-8-2010, *glass processing for 8 mm

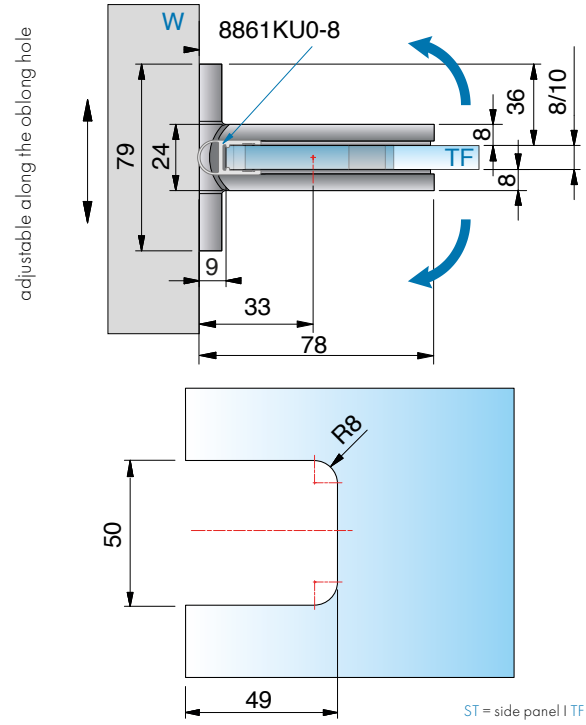

ST = side panel I TF = door panel I W = wall

8342ZN glass-glass 180°

MADE IN GERMANY



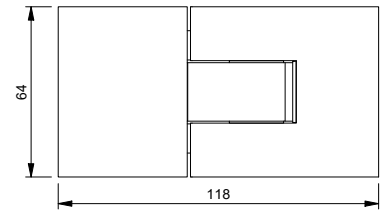

article no.	glass thickness
8342__	8/10* mm



finish		
	ZN5	gloss chrome
	ZNPVD22	stainless steel optic
	ZN135	deep black matt
	ZNPVD39	gold bronze brushed
	ZNPVD40	gold optic brushed
	ZNPVD41	copper optic brushed
	ZNPVD42	graphite metal optic brushed

features

97° opening in both directions, one-sided mounting bracket, oblong hole, slotted hole adjustment with cover cap, infinitely adjustable closed-position, self-closing on the last centimetres, sealing profile interrupted on the hardware side in the hinge area, Load capacity (2 hinges) 47 kg (max. door panel width 1000 mm)

*important

when using the hinges for 10 mm glass, please order the insert-set:
for **10 mm glass insert-set art. no. HZ-SET25**
*You can request the glass processing for 10 mm glass from our technical department.



8342ZN glass-glass 180°

MADE IN GERMANY



without seal profile, *glass processing for 8 mm

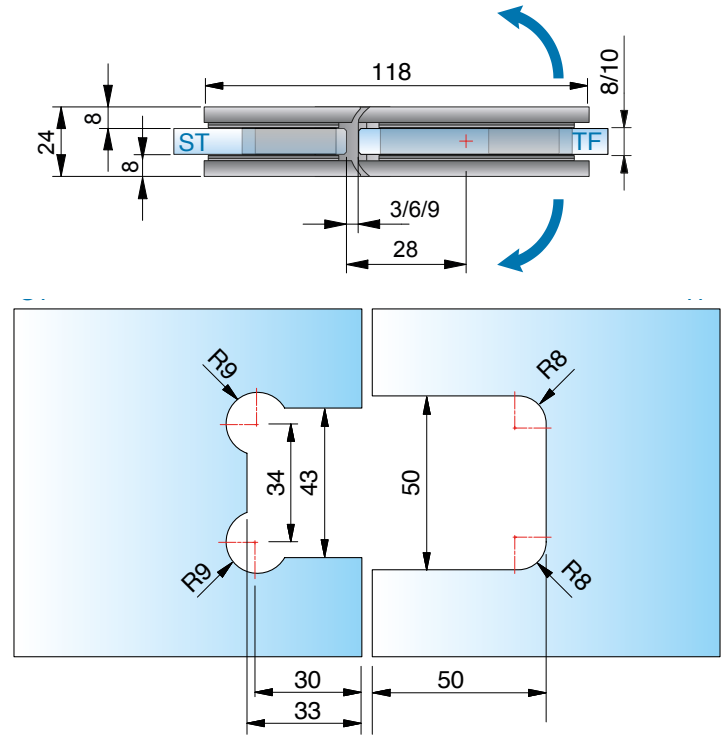



with seal profile 8861KU0-8-2010, *glass processing for 8 mm

ST = side panel I TF = door panel I W = wall

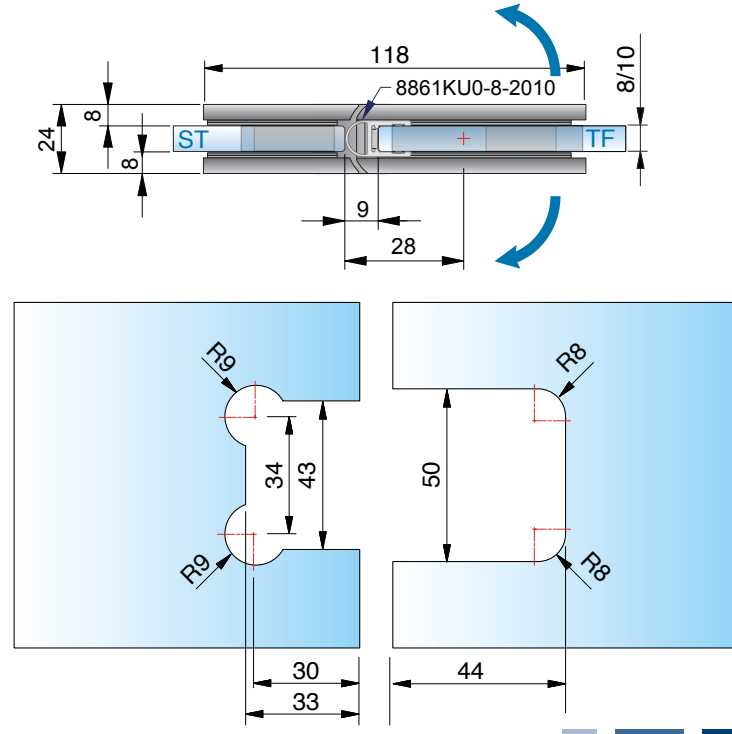

8342ZN glass-glass 180°

MADE IN GERMANY



8342ZN glass-glass 180°

MADE IN GERMANY



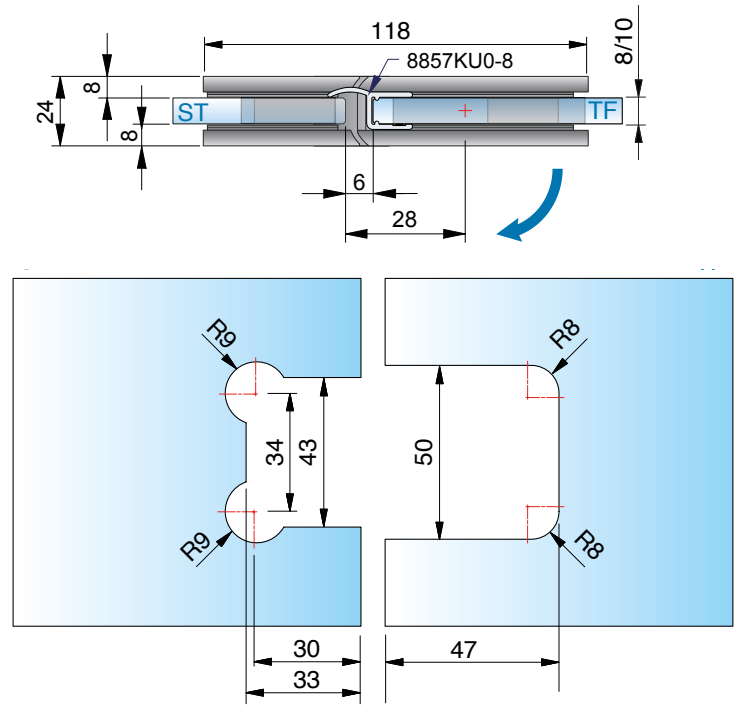

without seal profile, *glass processing for 8 mm



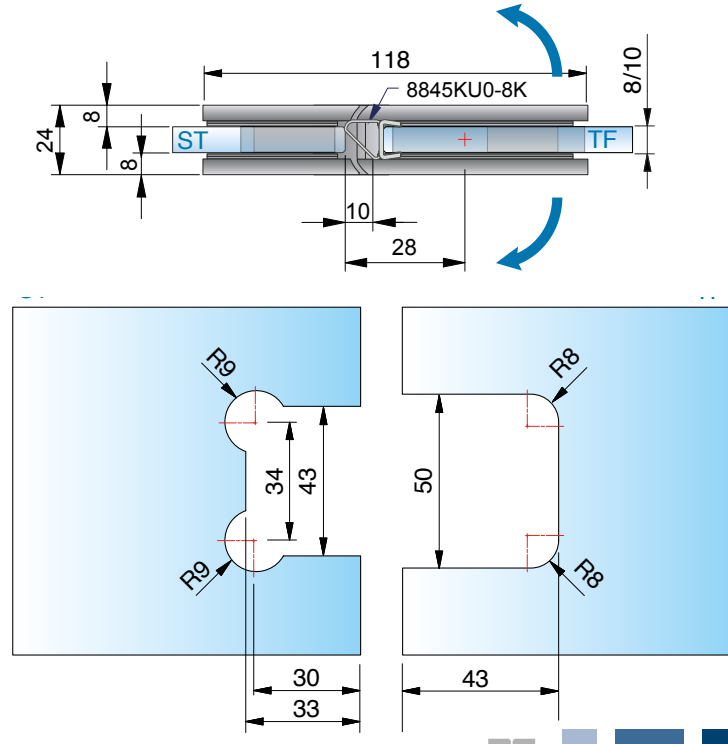

with seal profile 8861KU0-8-2010, *glass processing for 8 mm

ST = side panel I TF = door panel I W = wall

8344ZN glass-glass 90°

MADE IN GERMANY



8344ZN glass-glass 90°

MADE IN GERMANY



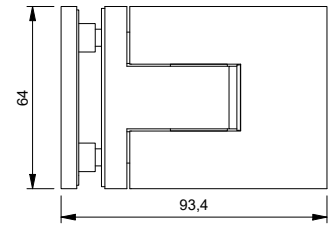

article no.	glass thickness
8344__	8/10* mm

finish		
	ZN5	gloss chrome
	ZNPVD22	stainless steel optic
	ZN135	deep black matt
	ZNPVD39	gold bronze brushed
	ZNPVD40	gold optic brushed
	ZNPVD41	copper optic brushed
	ZNPVD42	graphite metal optic brushed

features
97° opening in both directions, one-sided mounting bracket, oblong hole, slotted hole adjustment with cover cap, infinitely adjustable closed-position, self-closing on the last centimetres, sealing profile interrupted on the hardware side in the hinge area, Load capacity (2 hinges) 47 kg (max. door panel width 1000 mm)

*important
when using the hinges for 10 mm glass, please order the insert-set:
for **10 mm glass insert-set art. no. HZ-SET24**
*You can request the glass processing for 10 mm glass from our technical department.



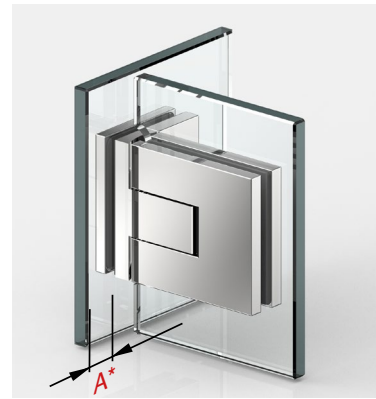

With the 90° glass-to-glass fitting, only glass holes are provided in the side panel, allowing the glass door leaf to be indented inwards and the projection (A) to be determined independently.

8344ZN glass-glass 90°

MADE IN GERMANY



without seal profile, *glass processing for 8 mm

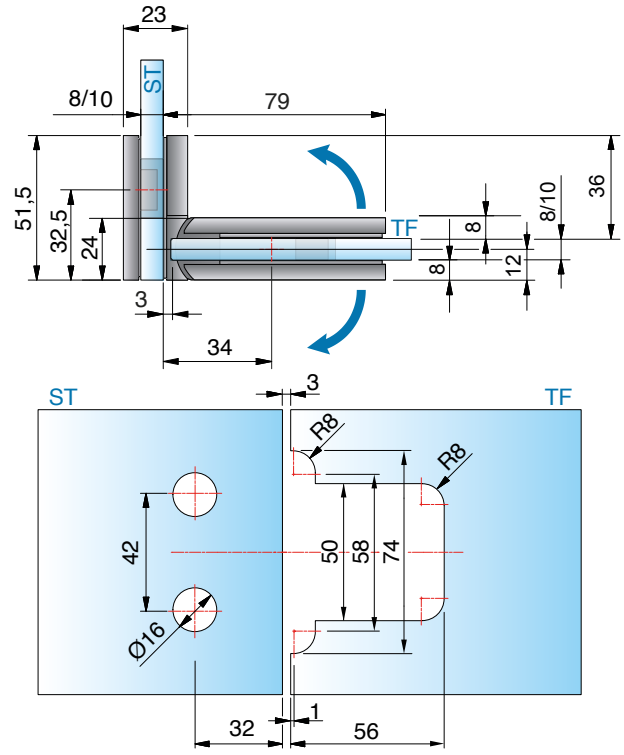



with seal profile 8861KU0-8-2010 (2500), *glass processing for 8 mm

ST = side panel I TF = door panel I W = wall

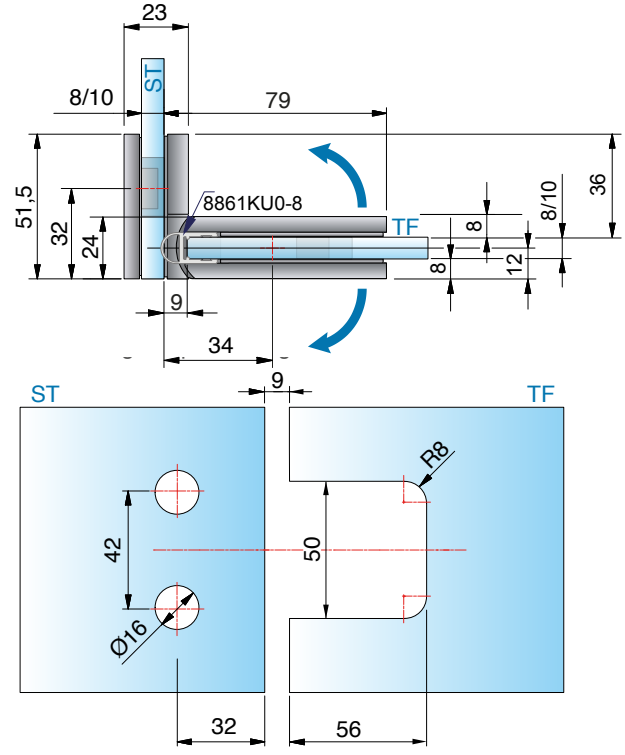

8344ZN glass-glass 90°

MADE IN GERMANY



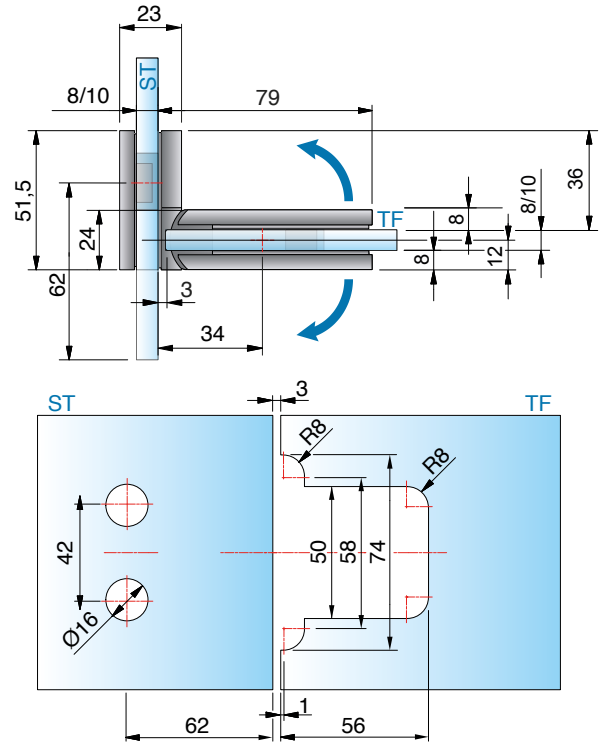

Without seal
Example: indented by 30 mm



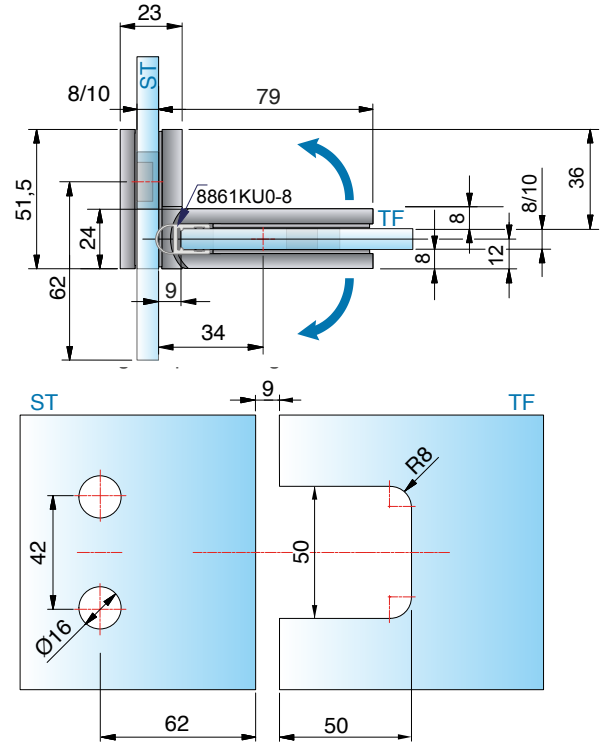

With seal: 8861KU0-8-2010 (2500)
Example: indented by 30 mm

available **surface colors**



ZN5
gloss chrome



ZN1
matt chrome



ZN10
gloss nickel



ZNPVD22
stainless steel optic



ZNPVD20
gold optic



ZNPVD35
black matt



ZN135
deep black matt

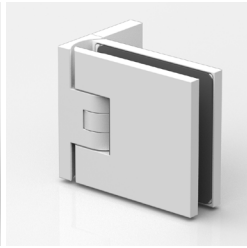

ZN134
white matt

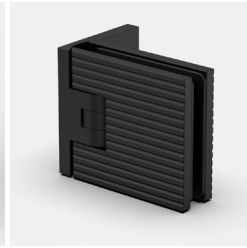

ZN135M1
deep black matt



ZN5M1
gloss chrome

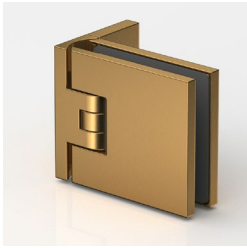

ZNPVD39
gold bronze brushed



ZNPVD40
gold optic brushed

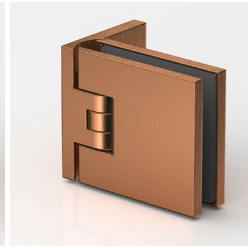

ZNPVD41
copper optic brushed



ZNPVD42
graphite metal optic
brushed

compatibility chart for fittings manufacturer colors see page 14









corresponding **angle brackets**

for FLAMEA+ can be found on page 126.

MADE
IN
GERMANY



FLAMEA+

shower swing door hinge

PS SERVICE



FLAMEA+ – uncompromising and strong

MADE IN GERMANY

The FLAMEA+ series was developed for showers of the top class. the optimum installation situation: glass showers in XL-format. FLAMEA+ meets all aesthetic and functional requirements for projects and private homes.

- 90° shower swing door hinge
- self-closing during the last 15 - 20°
- centered pivot-point, therefore usage as swing door possible
- fully adjustable closed position
- loading capacity (2 hinges): 45 kg
  corresponding to a glass door with the dimension 900 x 2000 mm and a glass thickness of 10 mm
- optimized for installation without sealing profile
- concealed screws
- minimized gap distance
- the durability of the hardware has been tested internally according to DIN EN 14428:2015 5.5

MADE IN GERMANY

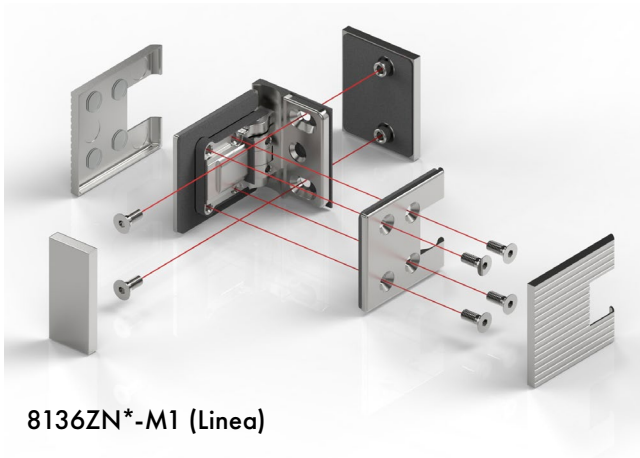

8136ZN*-M1 (Linea)

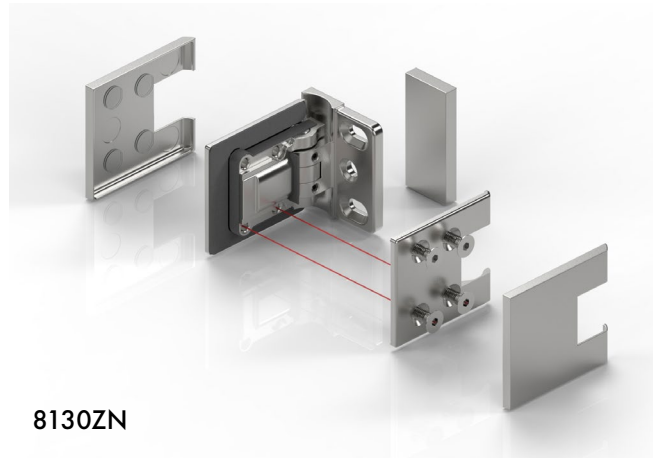

8130ZN

- intelligently designed:
  The fitting body and counter plate interlock
  and are securely screwed together in four places.



- for glass-glass 90°, only drilled holes are required in the side panel, so that the glass door panel is set inwards and the overhang (A) can be determined by the installer.

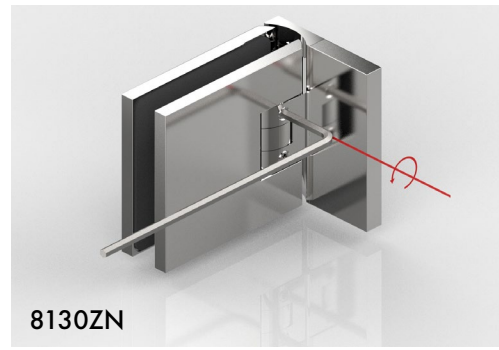

8130ZN

- fully adjustable closed position
- stable and strong plate for wall-connection
- concealed screws





FLAMEA+ SN

- also available as sauna hinge (see page 392)

Please note that the instruction manual can be found at www.pauli.de

FLAMEA+ LINEA

MADE IN GERMANY



The new version with an elegant relief structure gives this hinge a timeless linear aesthetic and consummate elegance.





Matching handles for Flamea+ Linea on page 512.



8130ZN5M1

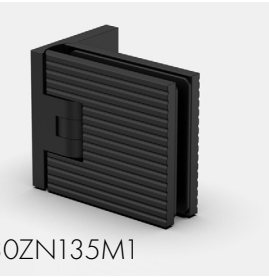

8130ZN135M1

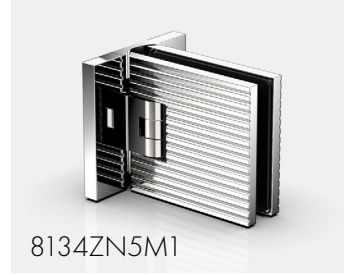

8134ZN5M1



8134ZN135M1



8132ZN5M1



8132ZN135M1



8131ZN5M1



8131ZN135M1

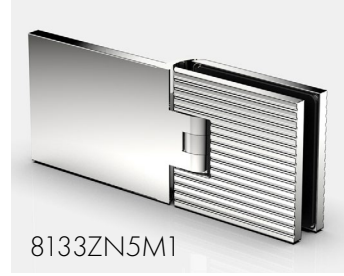

8133ZN5M1



8133ZN135M1

FLAMEA+ LINEA

MADE IN GERMANY



We also offer accessories with the new relief structure to match the hinges



8194ZN5M1



8194ZN135M1



8199ZN5M1



8199ZN135M1



8199ZN5M1



8199ZN135M1



8692ZN5M1



8692ZN135M1



8196ZN5M1



8196ZN135M1



8691ZN5M1



8692ZN135M1



8198ZN5M1



8198ZN135M1

8130ZN glass-wall 90°

MADE IN GERMANY



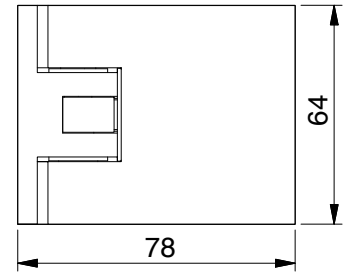

article no. FLAMEA+		glass thickness
8130__		6*/8/10* mm
finish		
	ZN5	gloss chrome
	ZN1	matt chrome
	ZN10	gloss nickel
	ZNPVD20	gold optic
	ZNPVD22	stainless steel optic
	ZNPVD35	black matt
	ZN134	white matt
	ZN135	deep black matt
	ZNPVD39	gold bronze brushed
	ZNPVD40	gold optic brushed
	ZNPVD41	copper optic brushed
	ZNPVD42	graphite metal optic brushed

features

opens in- and outwards 90°, with adjustable closed position, adjustable anlong the oblong hole, single sided mounting plate, concealed screws

shim plates in thicknesses 2/3/5/10 mm can be found on page 639

*Important

When using the hinges for 6 or 10 mm glass thickness, please use the insert set Art. No. HZ-SET3 per hinge free of charge.

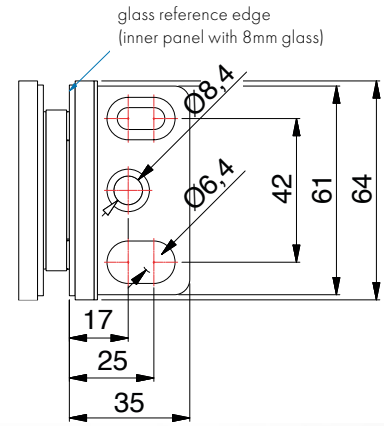



article no. FLAMEA+ LINEA		glass thickness
8130__-M1		6*/8/10* mm
finish		
	ZN5	gloss chrome
	ZN135	deep black matt

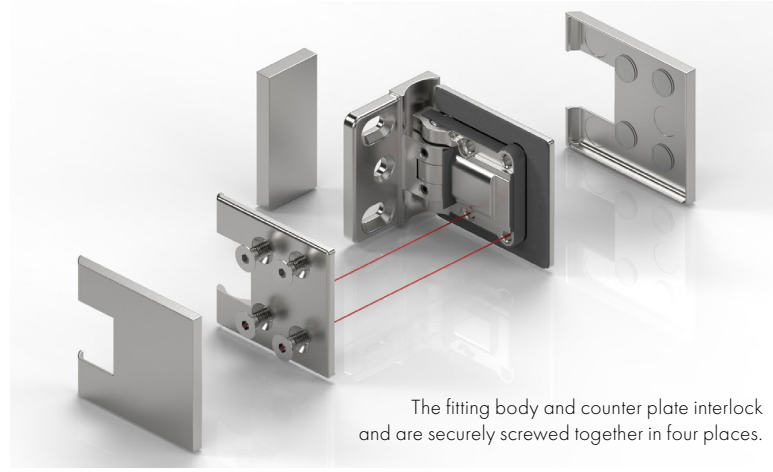

The fitting body and counter plate interlock and are securely screwed together in four places.

8130ZN glass-wall 90°

MADE IN GERMANY

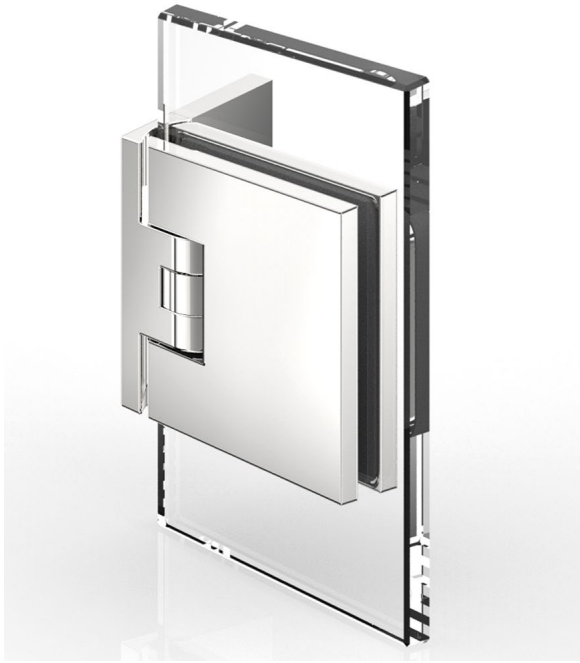

without seal profile, *glass processing for 6/8/10 mm

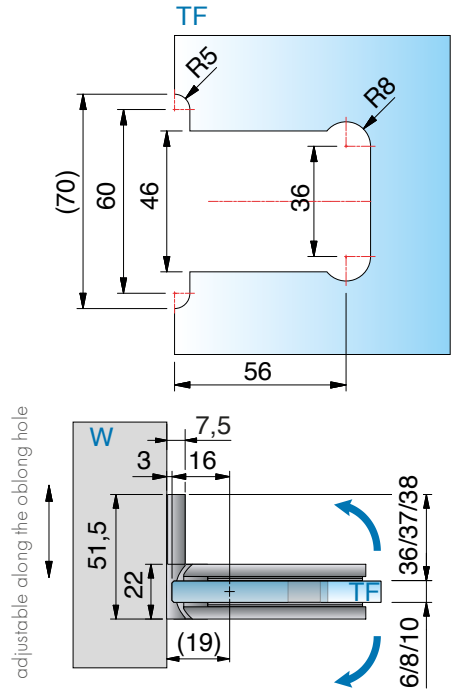

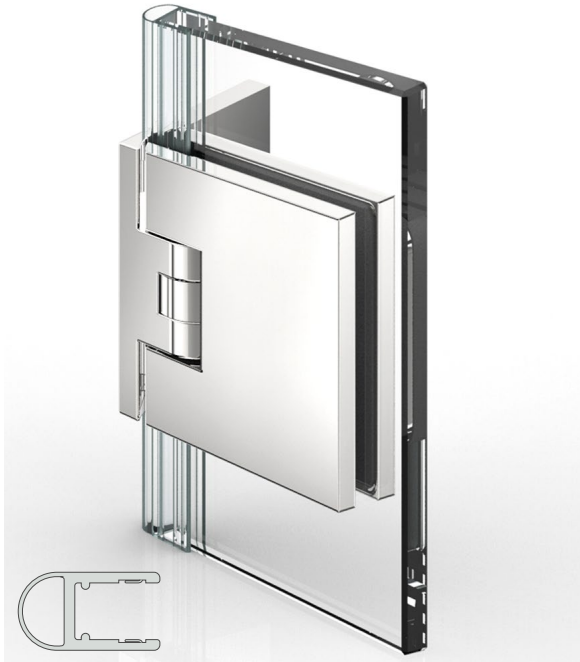

with seal profile 8861KU0-8-2010 (2500), *glass processing for 6/8/10 mm

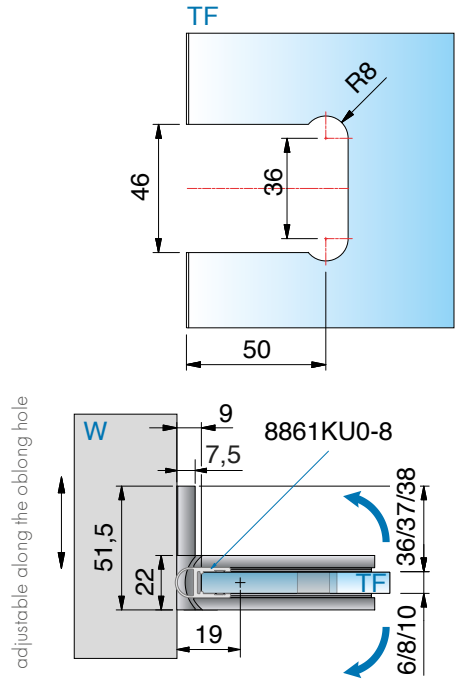

ST = side panel I TF = door panel I W = wall

8134ZN glass-wall 90°

MADE IN GERMANY



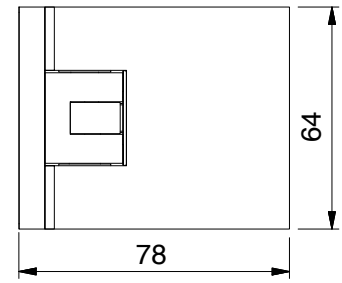

article no. FLAMEA+	glass thickness
8134__	6*/8/10* mm



finish	
ZN5	gloss chrome
ZN1	matt chrome
ZN10	gloss nickel
ZNPVD20	gold optic
ZNPVD22	stainless steel optic
ZNPVD35	black matt
ZN134	white matt
ZN135	deep black matt
ZNPVD39	gold bronze brushed
ZNPVD40	gold optic brushed
ZNPVD41	copper optic brushed
ZNPVD42	graphite metal optic brushed

Merkmale

opens in- and outwards 90°, with adjustable closed position, adjustable anlong the oblong hole, double sided mounting plate, concealed screws

shim plates in thicknesses 2/3/5/10 mm can be found on page 639

*Important

When using the hinges for 6 or 10 mm glass thickness, please use the insert set Art. No. HZ-SET3 per hinge free of charge.

*You can request the glass processing for 6 or 10 mm glass from our technical department.

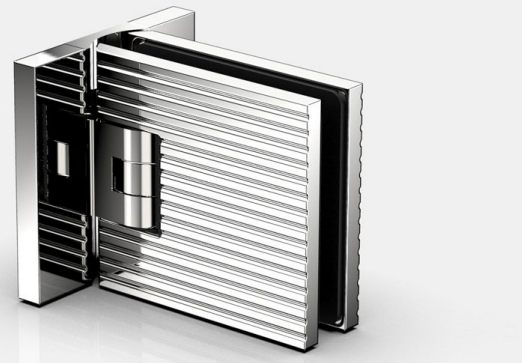

article no. FLAMEA+ LINEA	glass thickness
8134__-M1	6*/8/10* mm



finish	
ZN5	gloss chrome
ZN135	deep black matt

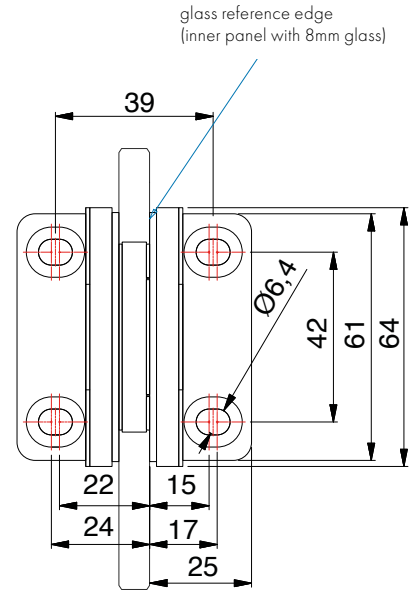

8134ZN glass-wall 90°

MADE IN GERMANY

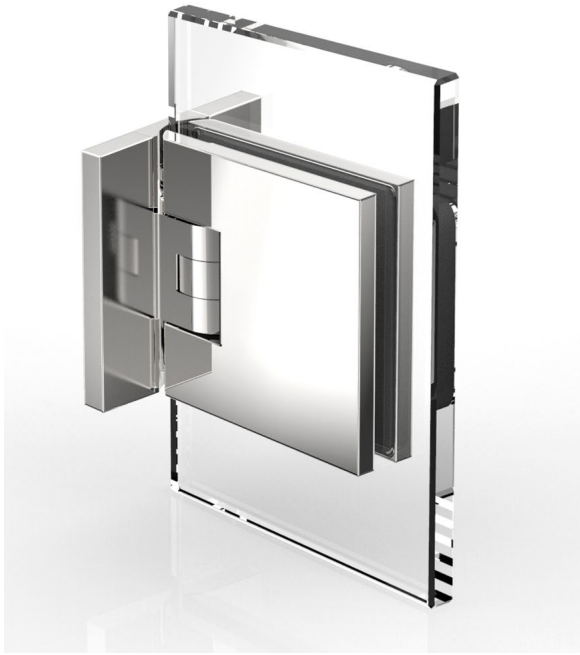

without seal profile, *glass processing for 6/8/10 mm

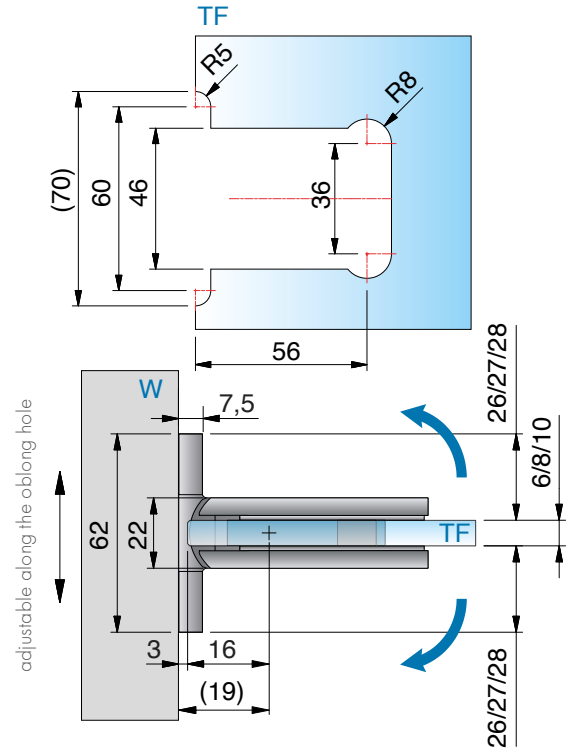



with seal profile 8861KU0-8-2010 (2500), *glass processing for 6/8/10 mm

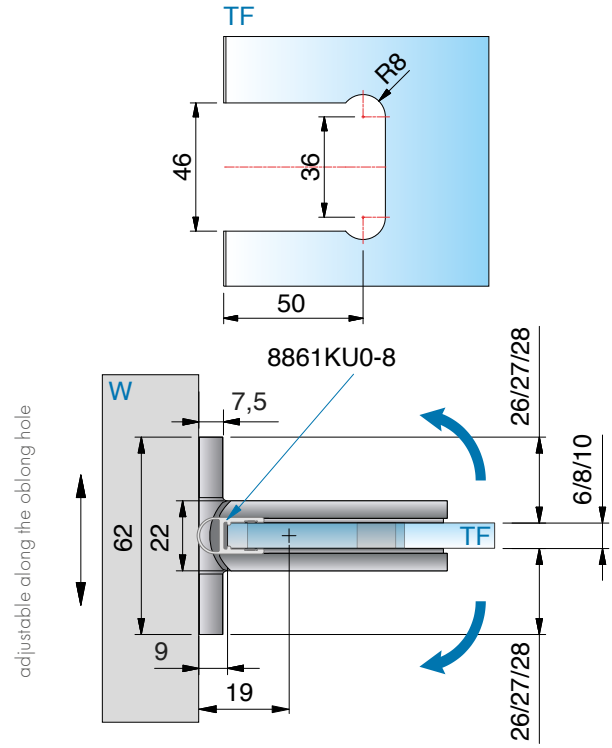

ST = side panel
TF = door panel
W = wall

8133ZN glass-wall 180°

MADE IN GERMANY



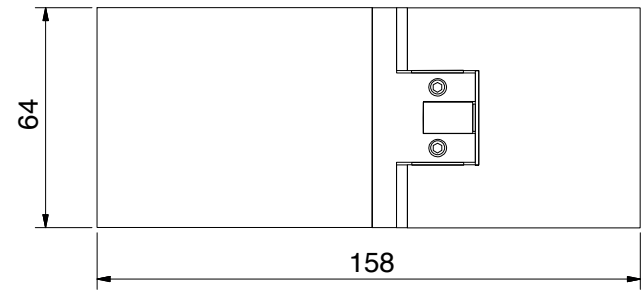

article no. FLAMEA+		glass thickness
8133__		6*/8/10* mm
finish		
	ZN5	gloss chrome
	ZN1	matt chrome
	ZN10	gloss nickel
	ZNPVD20	gold optic
	ZNPVD22	stainless steel optic
	ZNPVD35	black matt
	ZN134	white matt
	ZN135	deep black matt
	ZNPVD39	gold bronze brushed
	ZNPVD40	gold optic brushed
	ZNPVD41	copper optic brushed
	ZNPVD42	graphite metal optic brushed

features

opens in- and outwards 90° depending on sealing profile, with adjustable closed position, adjustable anlong the oblong hole, concealed screws
max door panel width 900 mm, loading capacity (2 hinges):
40 kg when using max. 900 x 2200 x 8 mm

*Important
When using the hinges for 6 or 10 mm glass thickness, please use the insert set Art. No. HZ-SET3 per hinge free of charge.
*You can request the glass processing for 6 or 10 mm glass from our technical department.

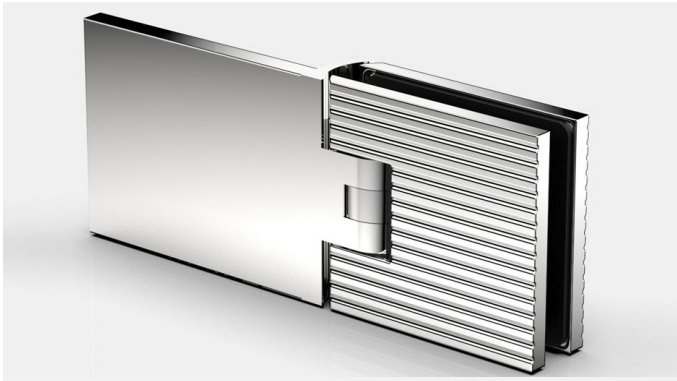

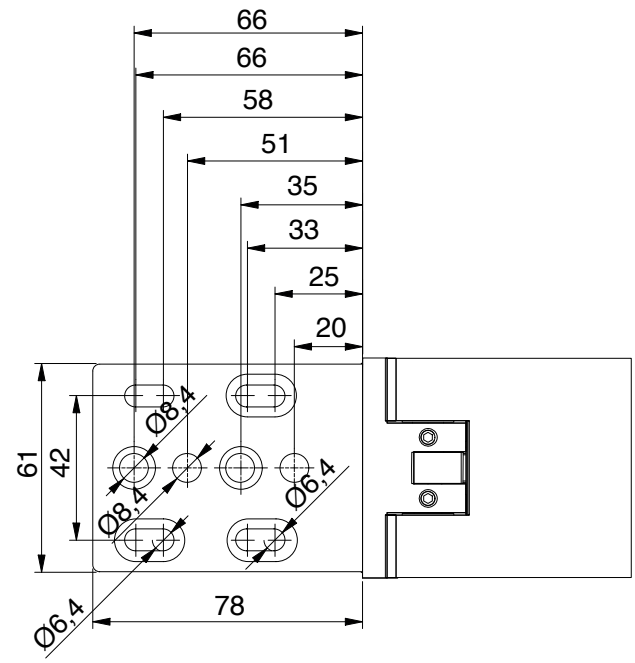

article no. FLAMEA+ LINEA		glass thickness
8133__-M1		6*/8/10* mm
finish		
	ZN5	gloss chrome
	ZN135	deep black matt

8133ZN glass-wall 180°

MADE IN GERMANY



without seal profile, *glass processing for 8 mm

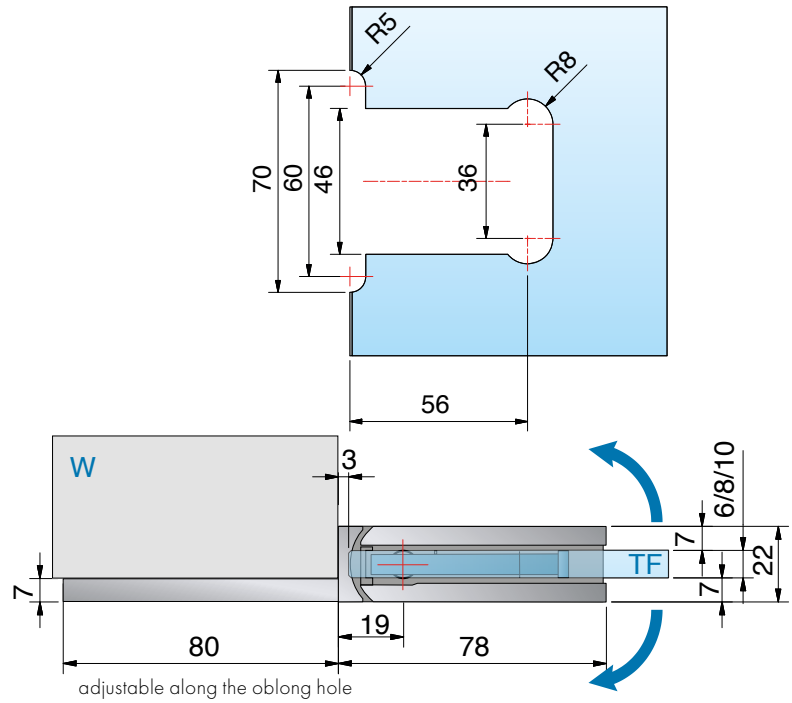

adjustable along the oblong hole



with seal profile 8861KU0-8-2010 (2500), *glass processing for 8 mm

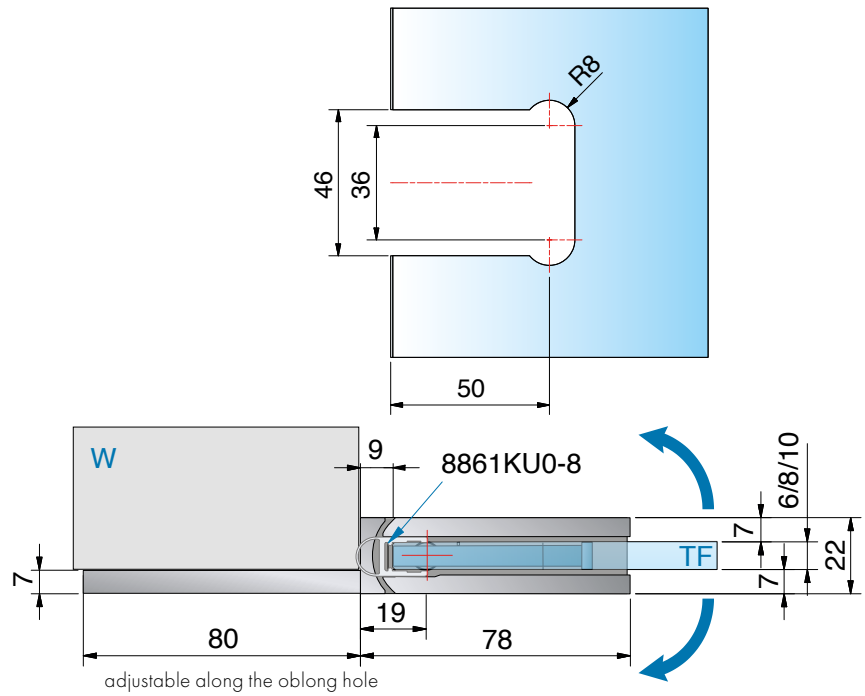

adjustable along the oblong hole

ST = side panel I TF = door panel I W = wall

8133ZN glass-wall 180°

MADE IN GERMANY



with seal profile 8862KU0-8-2010 (2500), *glass processing for 8 mm

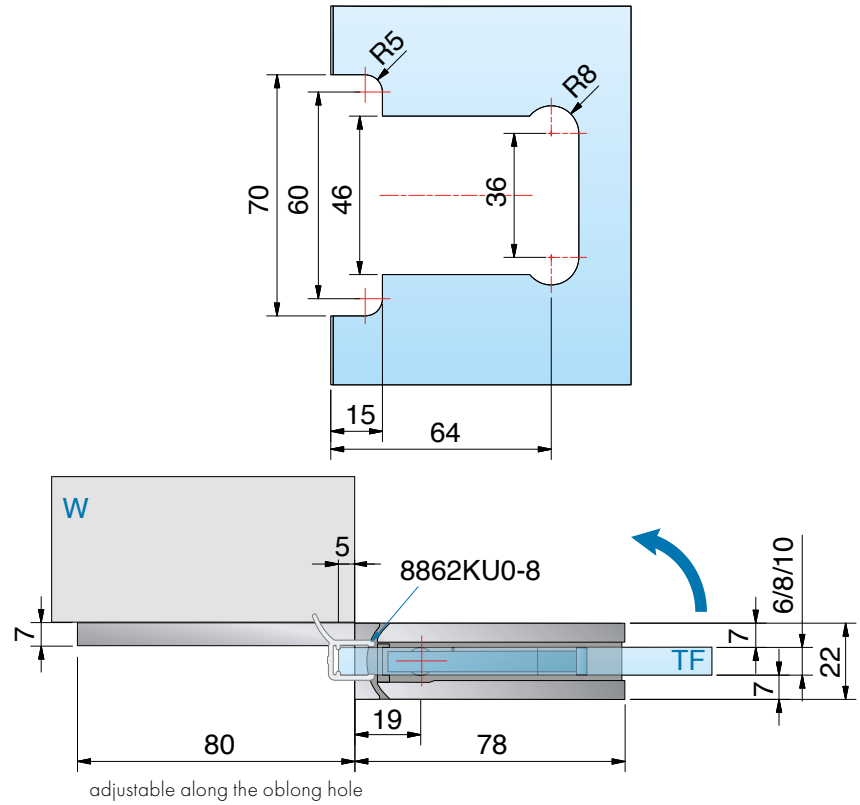

adjustable along the oblong hole

ST = side panel I TF = door panel I W = wall

8133ZN glass-wall 180°

MADE IN GERMANY



8136ZN glass-glass 90°

MADE IN GERMANY

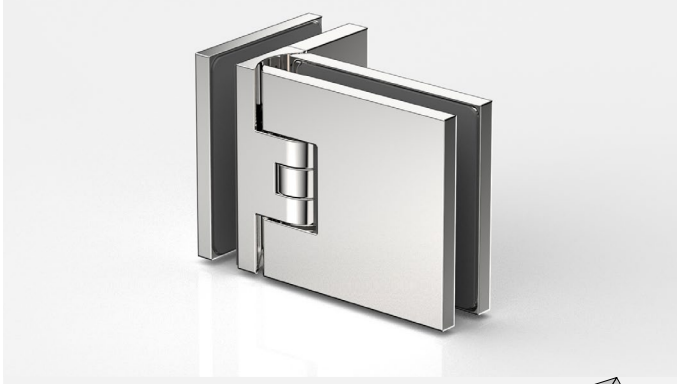

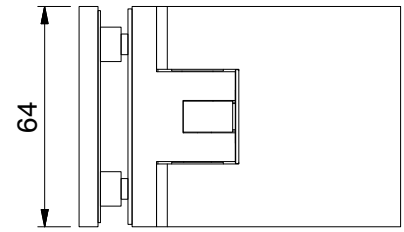

article no. FLAMEA+		glass thickness
8136__		6*/8/10* mm
finish		
	ZN5	gloss chrome
	ZN1	matt chrome
	ZN10	gloss nickel
	ZNPVD20	gold optic
	ZNPVD22	stainless steel optic
	ZNPVD35	black matt
	ZN134	white matt
	ZN135	deep black matt
	ZNPVD39	gold bronze brushed
	ZNPVD40	gold optic brushed
	ZNPVD41	copper optic brushed
	ZNPVD42	graphite metal optic brushed

features
opens in- and outwards 90°, with adjustable closed position, concealed screws with cover plate
*offset dimension **(A)** on the side panel can be determined by the installer

*Important
When using the hinges for 6 or 10 mm glass thickness, please use the insert set Art. No. HZ-SET3 per hinge free of charge.
*You can request the glass processing for 6 or 10 mm glass from our technical department.

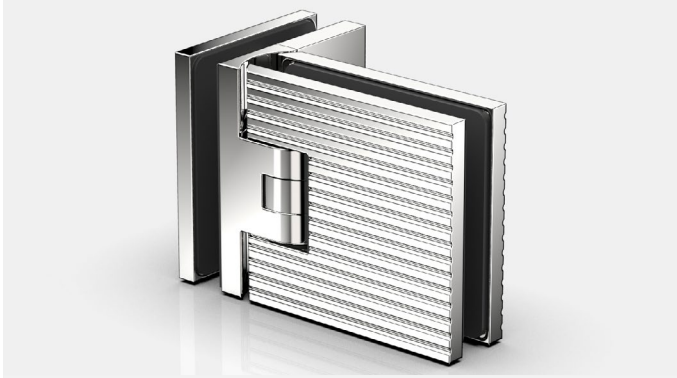

article no. FLAMEA+ LINEA		glass thickness
8136__-M1		6*/8/10* mm
finish		
	ZN5	gloss chrome
	ZN135	deep black matt

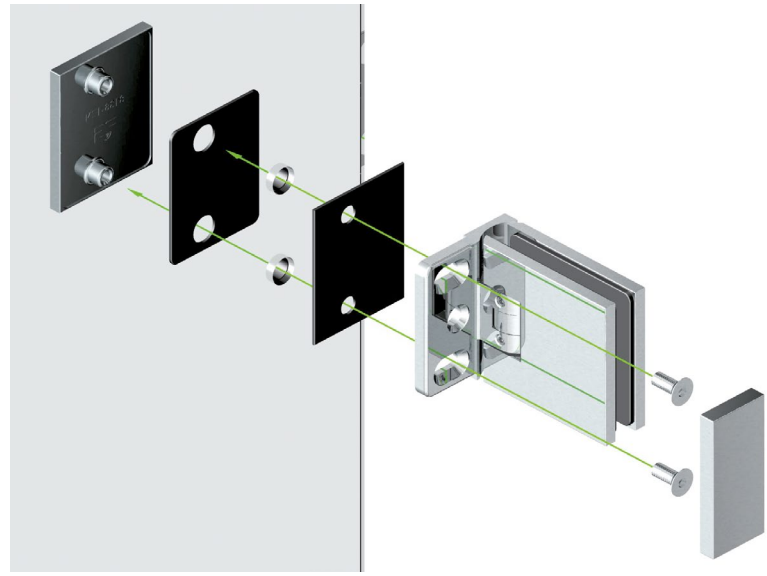

8136ZN glass-glass 90°

MADE IN GERMANY



- for glass-glass 90°, only drilled holes are required in the side panel, so that the glass door panel is set inwards and the overhang **(A)** can be determined by the installer.



8136ZN glass-glass 90°

MADE IN GERMANY

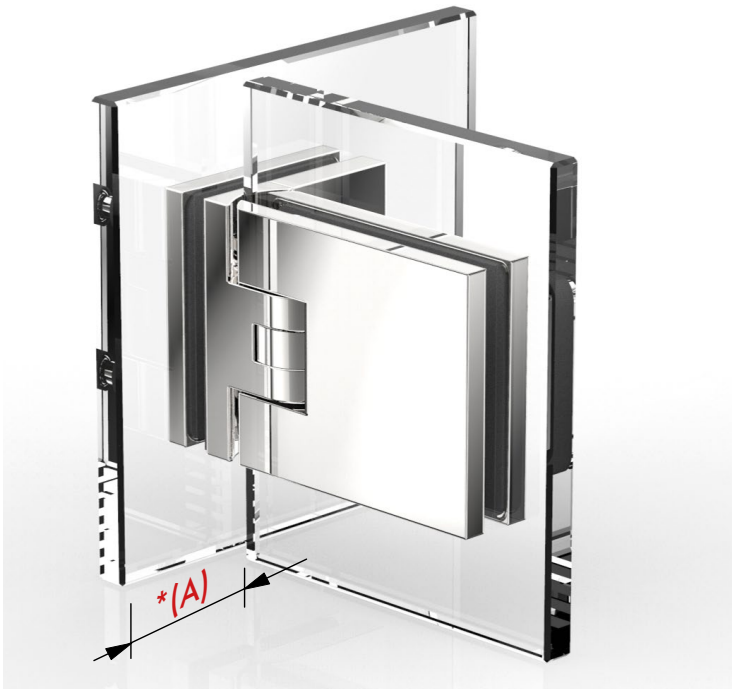

without seal profile, *glass processing for 8 mm
*You can request the glass processing for 6 or 10 mm glass from our technical department.

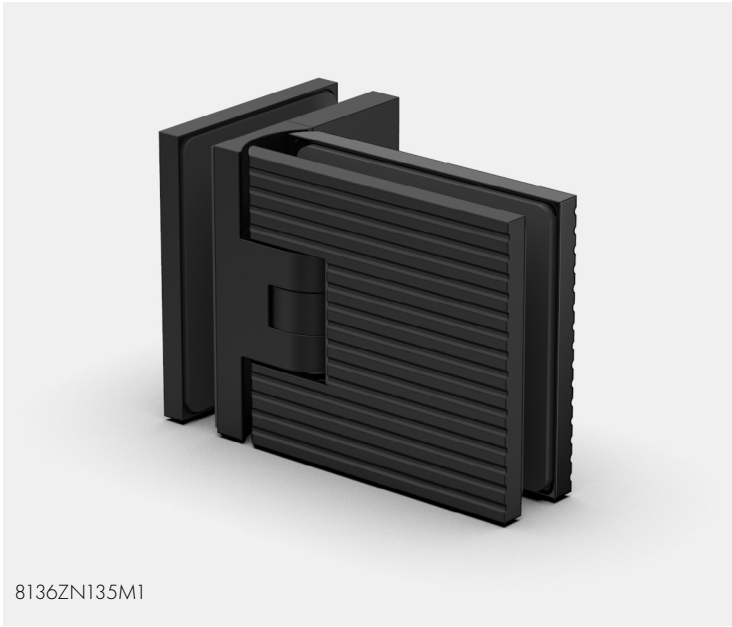

8136ZN135M1

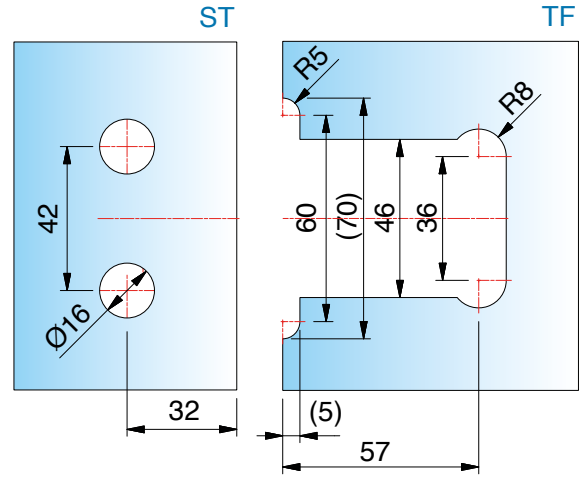

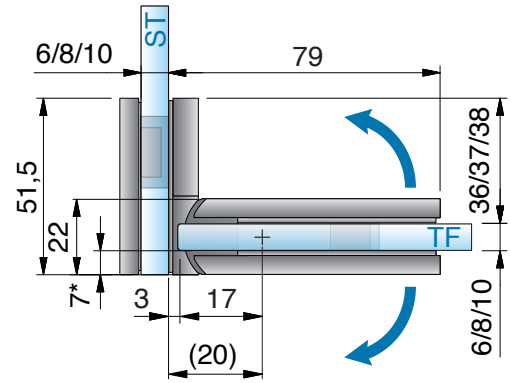

8136ZN glass-glass 90°

MADE IN GERMANY

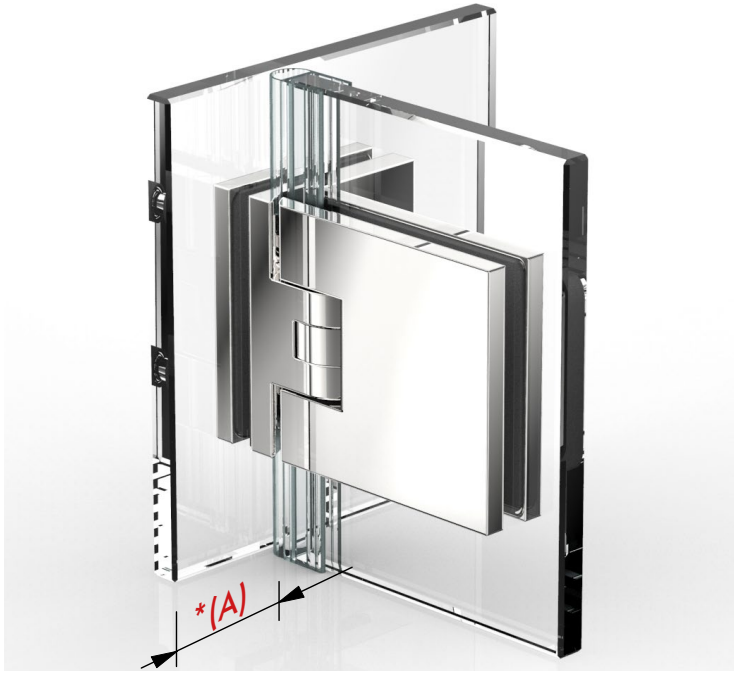

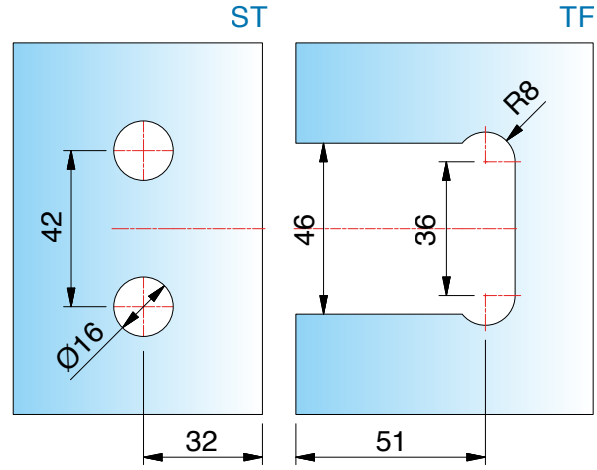

with seal profile 8861KU0-8-2010, *glass processing for 8 mm
*You can request the glass processing for 6 or 10 mm glass from our technical department.

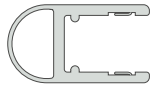

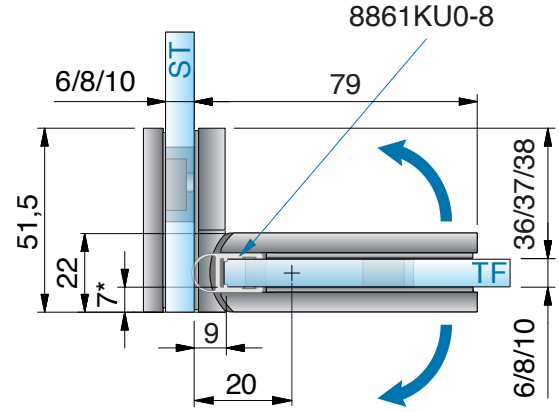

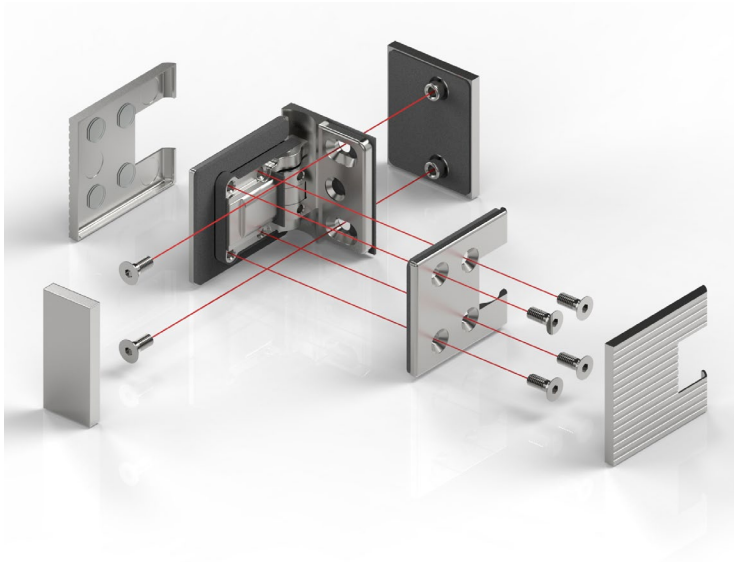

ST = side panel I TF = door panel I W = wall

8131ZN glass-glass 135°

MADE IN GERMANY



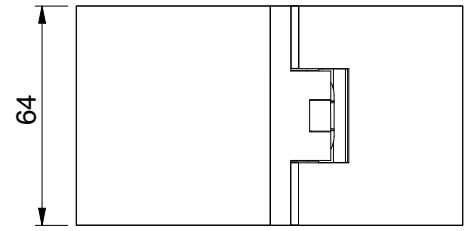

article no. FLAMEA+	glass thickness
8131__	6*/8/10* mm

features
opens in- and outwards 90° depending on sealing profile, with adjustable closed position, concealed screws with cover plate

*Important
When using the hinges for 6 or 10 mm glass thickness, please use the insert set Art. No. HZ-SET4 per hinge free of charge.
*You can request the glass processing for 6 or 10 mm glass from our technical department.

finish	
ZN5	gloss chrome
ZN1	matt chrome
ZN10	gloss nickel
ZNPVD20	gold optic
ZNPVD22	stainless steel optic
ZNPVD35	black matt
ZN134	white matt
ZN135	deep black matt
ZNPVD39	gold bronze brushed
ZNPVD40	gold optic brushed
ZNPVD41	copper optic brushed
ZNPVD42	graphite metal optic brushed

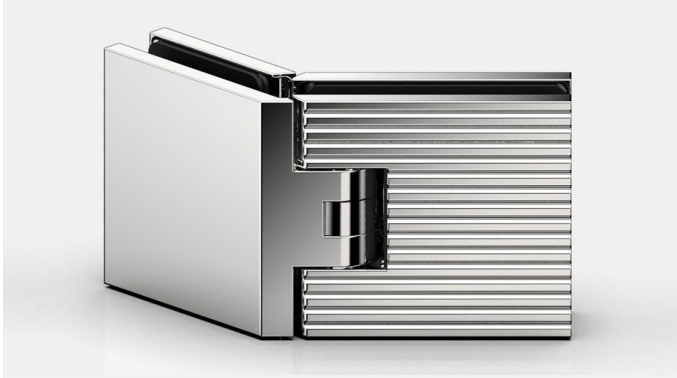

article no. FLAMEA+ LINEA	glass thickness
8131__-M1	6*/8/10* mm

finish	
ZN5	gloss chrome
ZN135	deep black matt



8131ZN glass-glass 135°

MADE IN GERMANY



without seal profile, *glass processing for 6/8/10 mm

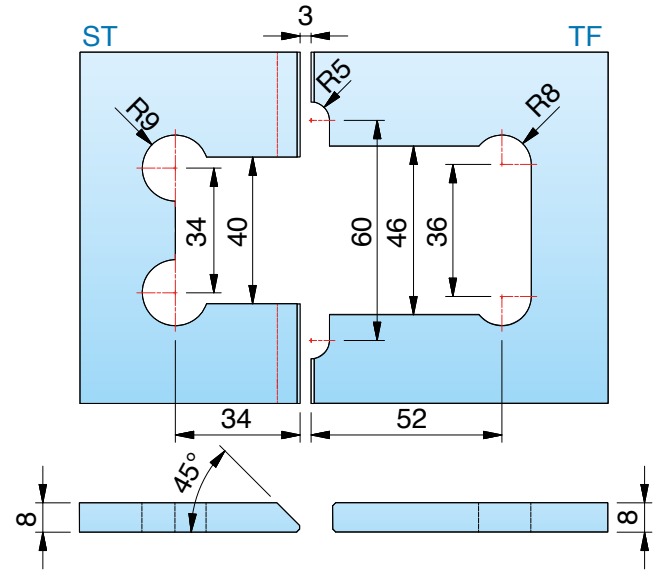

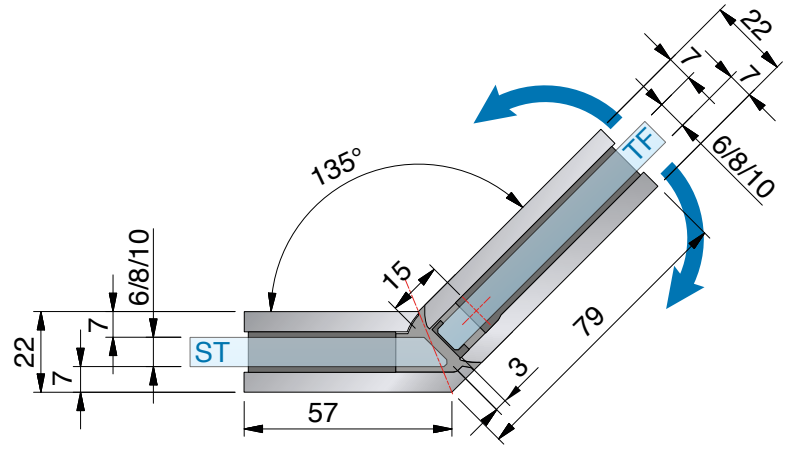

ST = side panel I TF = door panel I W = wall

8131ZN glass-glass 135°

MADE IN GERMANY



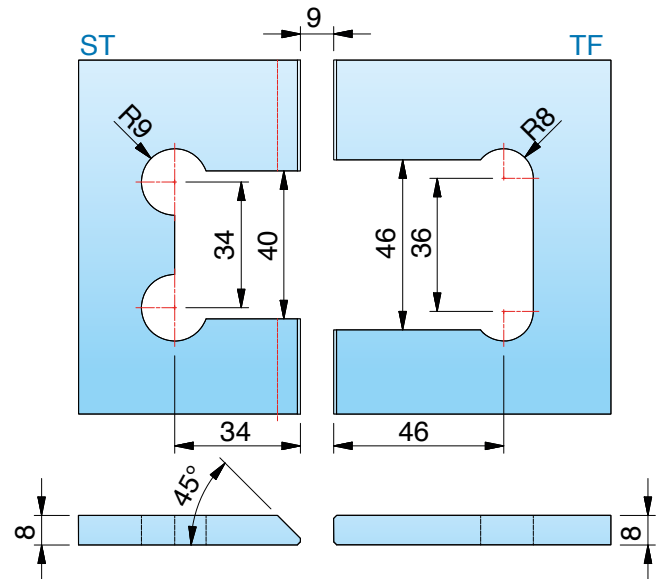

with seal profile 8861KU0-8-2010 (2500), *glass processing for 8 mm
*You can request the glass processing for 6 or 10 mm glass from our technical department.



8131ZN135-M1

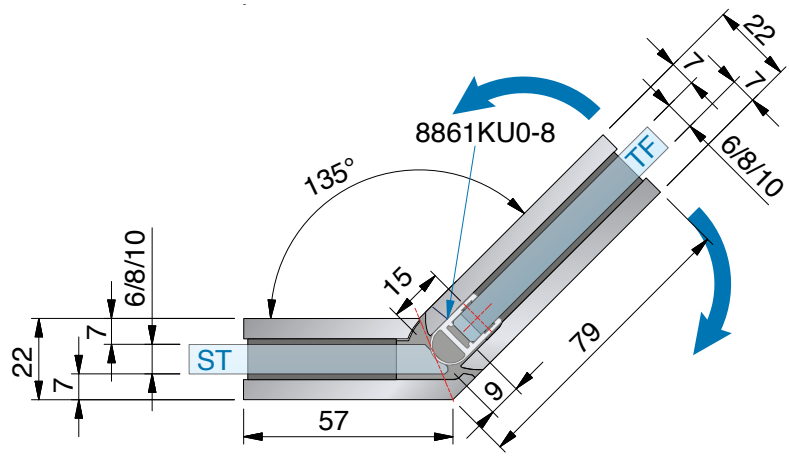

8131ZN glass-glass 135°

MADE IN GERMANY



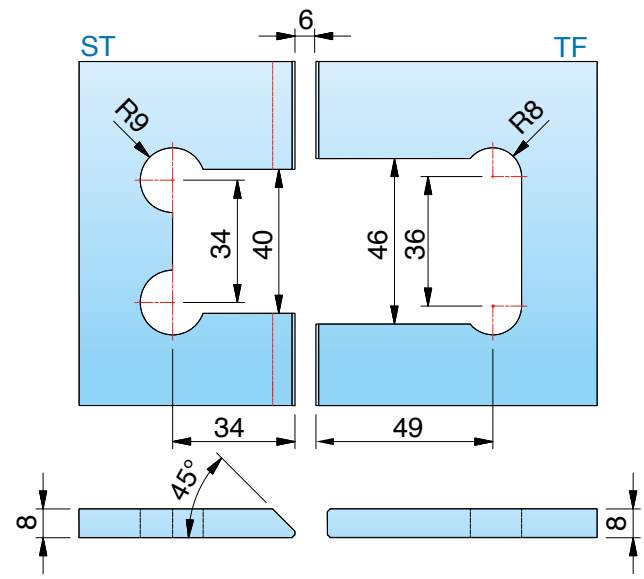

with seal profile 8860KU0-8-2010 (2500), *glass processing for 8 mm
*You can request the glass processing for 6 or 10 mm glass from our technical department.

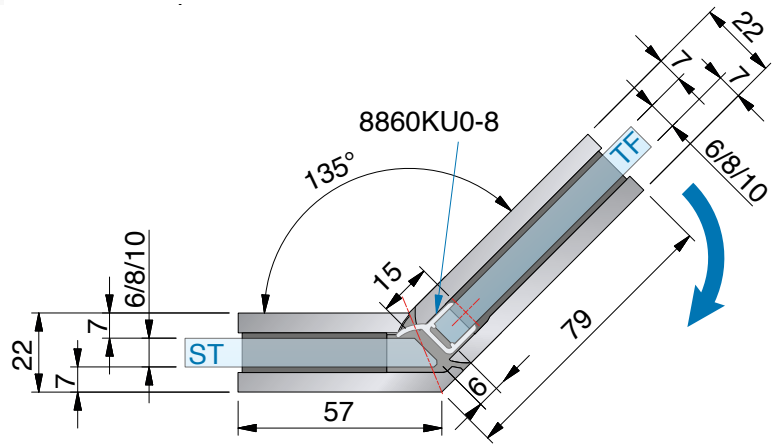

ST = side panel I TF = door panel I W = wall

8132ZN glass-glass 180°

MADE IN GERMANY



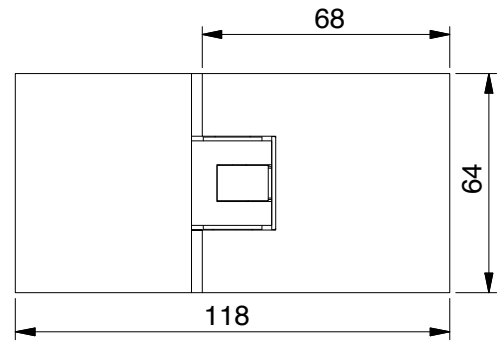

article no. FLAMEA+		glass thickness
8132__		6*/8/10* mm
finish		
	ZN5	gloss chrome
	ZN1	matt chrome
	ZN10	gloss nickel
	ZNPVD20	gold optic
	ZNPVD22	stainless steel optic
	ZNPVD35	black matt
	ZN134	white matt
	ZN135	deep black matt
	ZNPVD39	gold bronze brushed
	ZNPVD40	gold optic brushed
	ZNPVD41	copper optic brushed
	ZNPVD42	graphite metal optic brushed



article no. FLAMEA+ LINEA		glass thickness
8132__-M1		6*/8/10* mm
finish		
	ZN5	gloss chrome
	ZN135	deep black matt

features

opens in- and outwards 90° depending on sealing profile, with adjustable closed position, concealed screws with cover plate

*Important

When using the hinges for 6 or 10 mm glass thickness, please use the insert set Art. No. HZ-SET4 per hinge free of charge.

*You can request the glass processing for 6 or 10 mm glass from our technical department.



8132ZN glass-glass 180°

MADE IN GERMANY



without seal profile, *glass processing for 6/8/10 mm

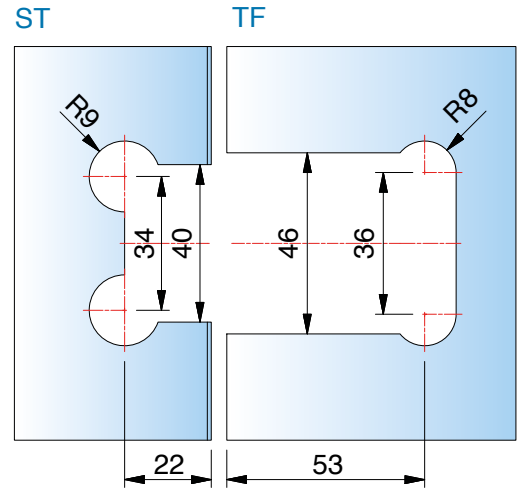

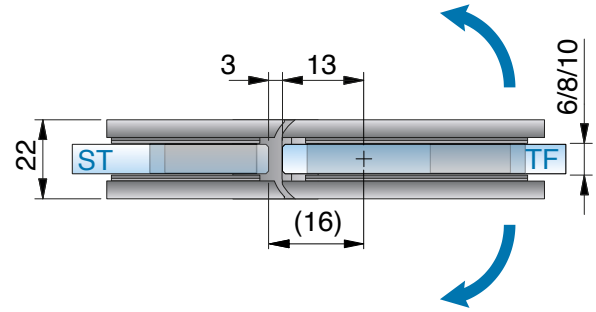

ST = side panel I TF = door panel I W = wall

8132ZN glass-glass 180°

MADE IN GERMANY



with seal profile 8861KU0-8-2010 (2500), *glass processing for 8 mm
*You can request the glass processing for 6 or 10 mm glass from our technical department.

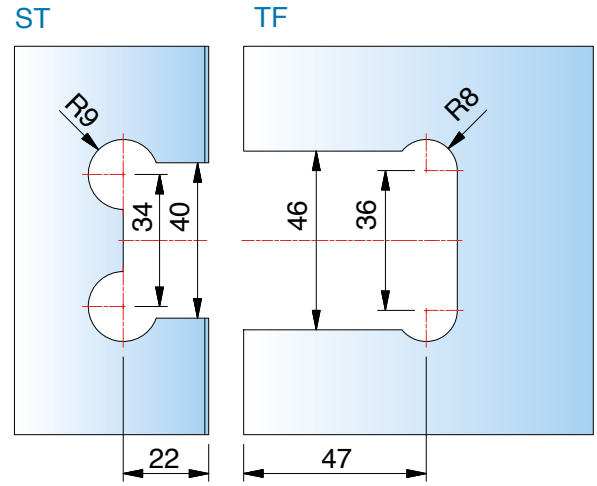

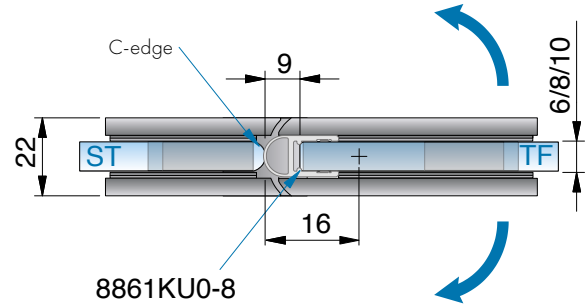



8132ZN135-M1

8132ZN glass-glass 180°

MADE IN GERMANY



with seal profile 8857KU0-8-2010 (2500), *glass processing for 6/8/10 mm



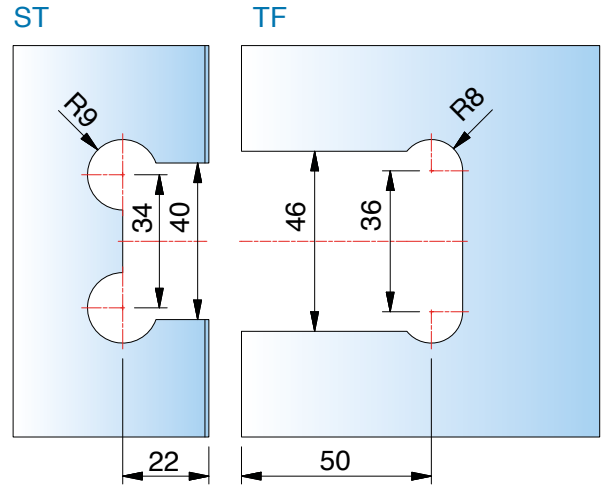

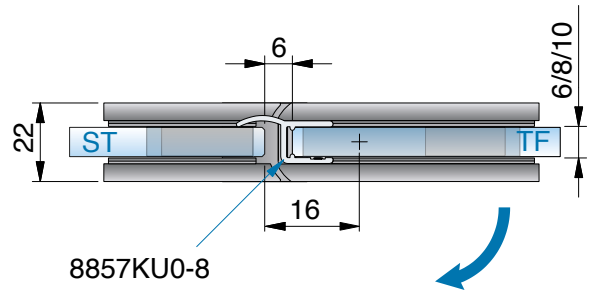

ST = side panel I TF = door panel I W = wall

8194ZN glass-wall 90° - fixed

MADE IN GERMANY



article no. FLAMEA+		glass thickness
8194__		6*/8/10* mm
finish		
	ZN5	gloss chrome
	ZN1	matt chrome
	ZN10	gloss nickel
	ZNPVD20	gold optic
	ZNPVD22	stainless steel optic
	ZNPVD35	black matt
	ZN134	white matt
	ZN135	deep black matt
	ZNPVD39	gold bronze brushed
	ZNPVD40	gold optic brushed
	ZNPVD41	copper optic brushed
	ZNPVD42	graphite metal optic brushed

features

with adjustable closed position, concealed screws with cover plate



article no. FLAMEA+ LINEA		glass thickness
8194__-M1		6/8/10 mm
finish		
	ZN5	gloss chrome
	ZN135	deep black matt

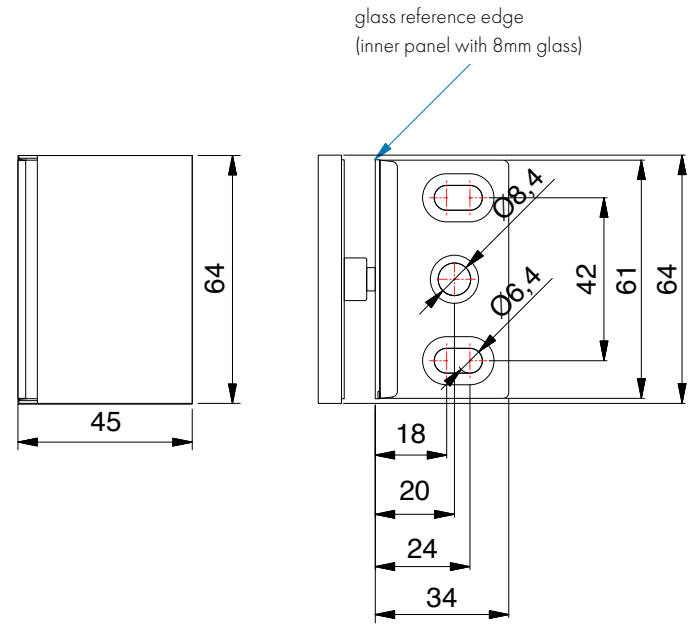

hole ø 20 mm or edge recess R35

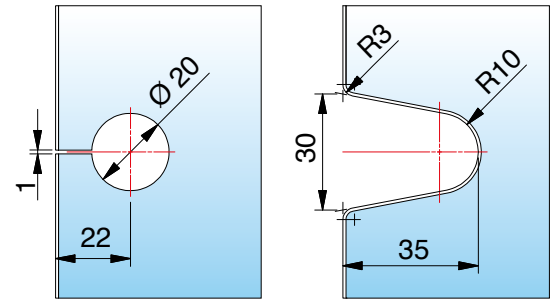

glass processing for 6/8/10 mm

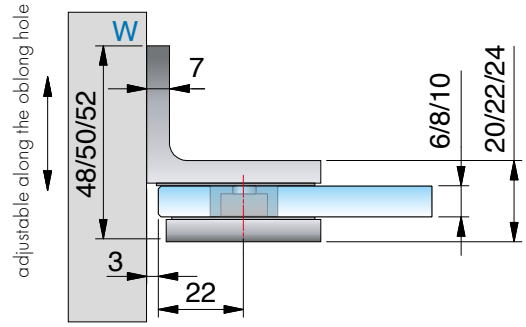

8193ZN glass-wall 180°

MADE IN GERMANY



article no. FLAMEA+	glass thickness
8193__	6*/8/10* mm

finish		
	ZN5	gloss chrome
	ZN1	matt chrome
	ZN10	gloss nickel
	ZNPVD20	gold optic
	ZNPVD22	stainless steel optic
	ZNPVD35	black matt
	ZN134	white matt
	ZN135	deep black matt
	ZNPVD39**	gold bronze brushed
	ZNPVD40**	gold optic brushed
	ZNPVD41**	copper optic brushed
	ZNPVD42**	graphite metal optic brushed

** Upon request

features
with adjustable closed position, concealed screws with cover plate



article no. FLAMEA+ LINEA	glass thickness
8193__-M1	6/8/10 mm

finish		
	ZN5	gloss chrome
	ZN135	deep black matt

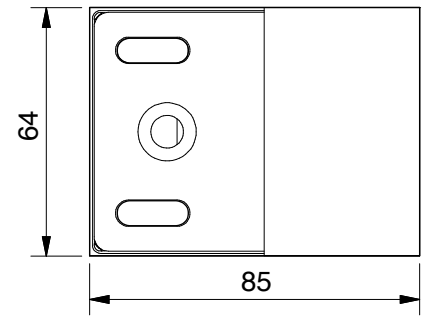

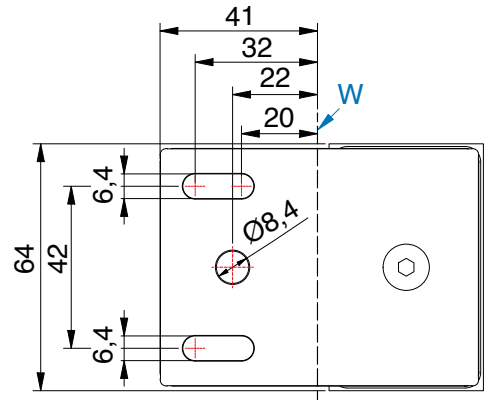

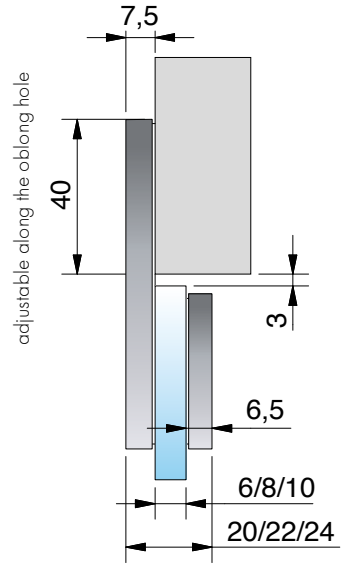

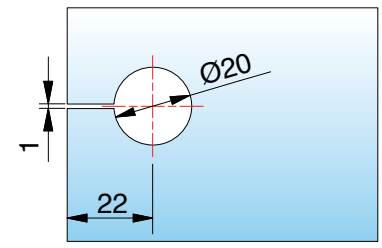

*glass processing for 8 mm

8196ZN glass-glass 90° - fixed

MADE IN GERMANY



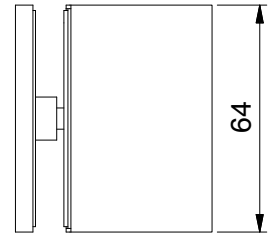

article no. FLAMEA+		glass thickness
8196__		6*/8/10* mm
finish		
	ZN5	gloss chrome
	ZN1	matt chrome
	ZN10	gloss nickel
	ZNPVD20	gold optic
	ZNPVD22	stainless steel optic
	ZNPVD35	black matt
	ZN134	white matt
	ZN135	deep black matt
	ZNPVD39**	gold bronze brushed
	ZNPVD40**	gold optic brushed
	ZNPVD41**	copper optic brushed
	ZNPVD42**	graphite metal optic brushed

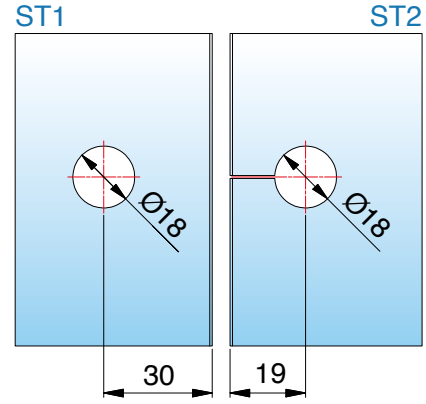

*glass processing for 8 mm

features
concealed screws with cover plate

** Upon request



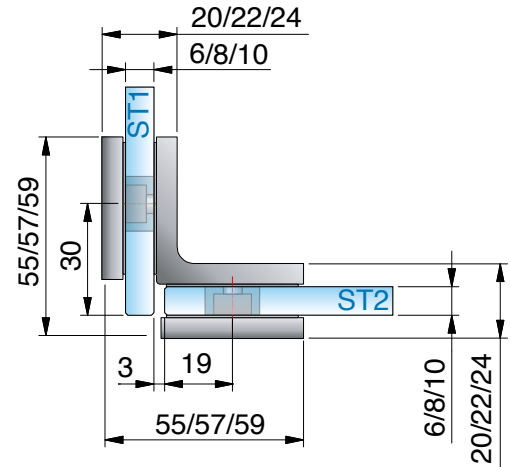

article no. FLAMEA+ LINEA		glass thickness
8196__-M1		6/8/10 mm
finish		
	ZN5	gloss chrome
	ZN135	deep black matt

*You can request the glass processing for 6 or 10 mm glass from our technical department.

8191ZN glass-glass 180°

MADE IN GERMANY



article no. FLAMEA+		glass thickness
8191__		6*/8/10* mm
finish		
	ZN5	gloss chrome
	ZN1	matt chrome
	ZN10	gloss nickel
	ZNPVD20	gold optic
	ZNPVD22	stainless steel optic
	ZNPVD35	black matt
	ZN134	white matt
	ZN135	deep black matt
	ZNPVD39**	gold bronze brushed
	ZNPVD40**	gold optic brushed
	ZNPVD41**	copper optic brushed
	ZNPVD42**	graphite metal optic brushed

features
concealed screws with cover plate

** Upon request



article no. FLAMEA+ LINEA		glass thickness
8191__-M1		6/8/10 mm
finish		
	ZN5	gloss chrome
	ZN135	deep black matt

*You can request the glass processing for 6 or 10 mm glass from our technical department.

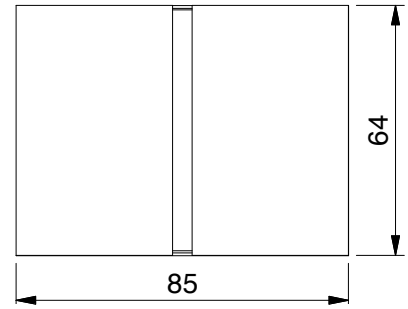

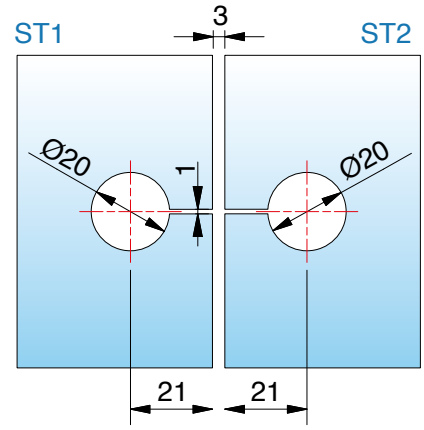

*glass processing for 8 mm

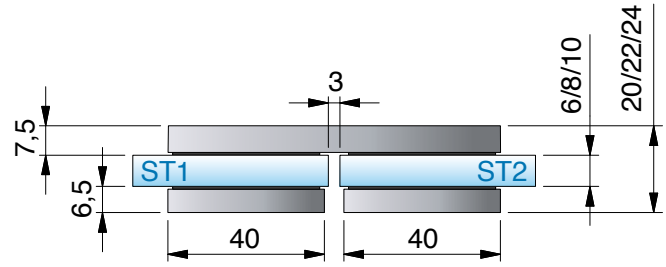

8199ZN glass-wall 90° - adjustable

MADE IN GERMANY



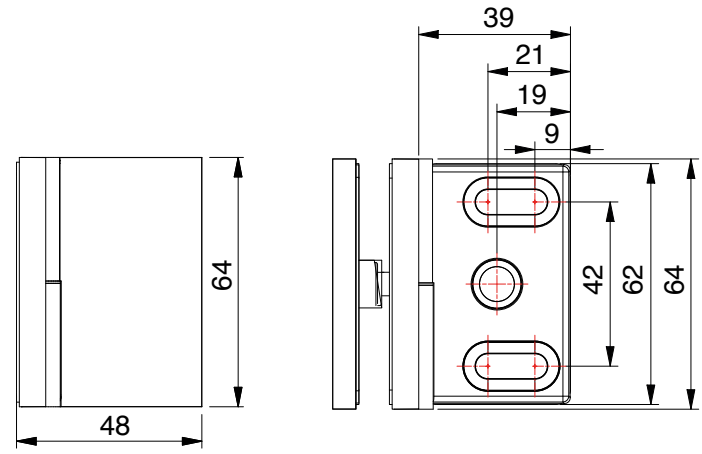

article no. FLAMEA+		glass thickness
8199__		6*/8/10* mm
finish		
	ZN5	gloss chrome
	ZN1	matt chrome
	ZN10	gloss nickel
	ZNPVD20	gold optic
	ZNPVD22	stainless steel optic
	ZNPVD35	black matt
	ZN134	white matt
	ZN135	deep black matt
	ZNPVD39	gold bronze brushed
	ZNPVD40	gold optic brushed
	ZNPVD41	copper optic brushed
	ZNPVD42	graphite metal optic brushed

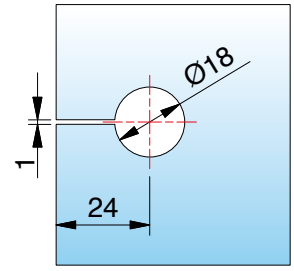

*glass processing for 8 mm glass

With other angles the miter angle and/or hole distance is changing according to chart.

features
concealed screws with cover plate



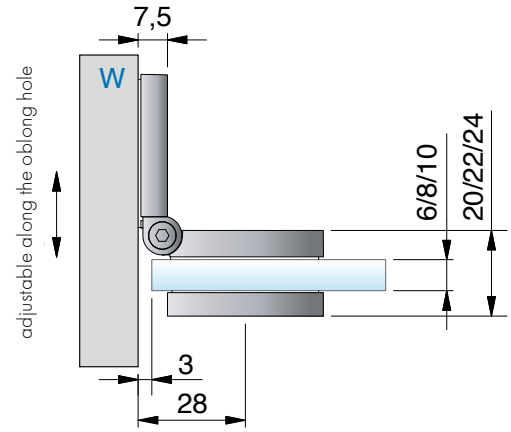

article no. FLAMEA+ LINEA		glass thickness
8199__-M1		6/8/10 mm
finish		
	ZN5	gloss chrome
	ZN135	deep black matt

*You can request the glass processing for 6 or 10 mm glass from our technical department.

8199ZN glass-wall 90° - adjustable

MADE IN GERMANY





miter angle and hole distances for **8199ZN**

corner	hole distances from glass edge	miter angle	remarks
60°	33 mm	30°	-
65°	31 mm	25°	-
70°	30 mm	20°	-
75°	28 mm	15°	-
80°	27 mm	10°	-
85°	26 mm	5°	-
90°	24 mm	without miter angle	hole slotted
95°	23 mm	5°	hole slotted
100°	22 mm	10°	hole slotted

8189ZN glass-wall 135° - adjustable

MADE IN GERMANY



article no. FLAMEA+		glass thickness
8189__		6*/8/10* mm
finish		
	ZN5	gloss chrome
	ZN1	matt chrome
	ZN10	gloss nickel
	ZNPVD20	gold optic
	ZNPVD22	stainless steel optic
	ZNPVD35	black matt
	ZN134	white matt
	ZN135	deep black matt
	ZNPVD39	gold bronze brushed
	ZNPVD40	gold optic brushed
	ZNPVD41	copper optic brushed
	ZNPVD42	graphite metal optic brushed

features

degree of angle is fully adjustable between 100° and 135°, concealed screws with cover plate

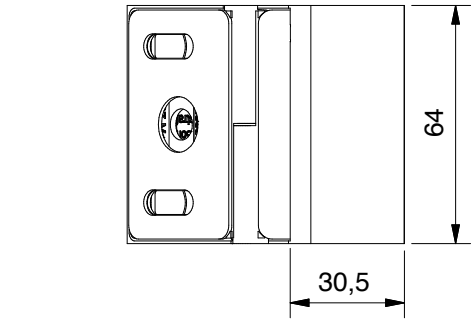

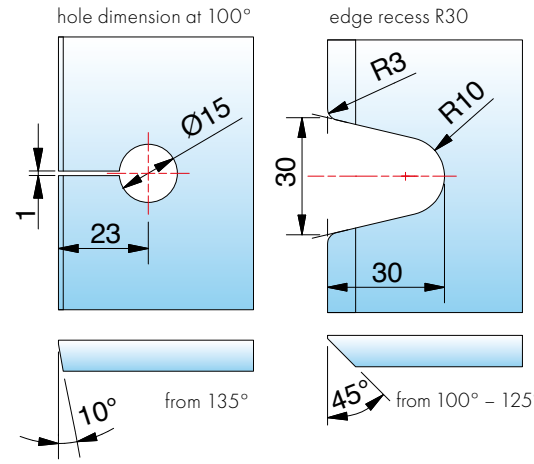

*glass processing for 8 mm glass

With other angles the miter angle and/or hole distance is changing according to chart.

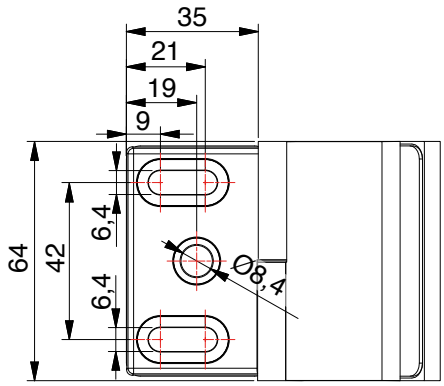

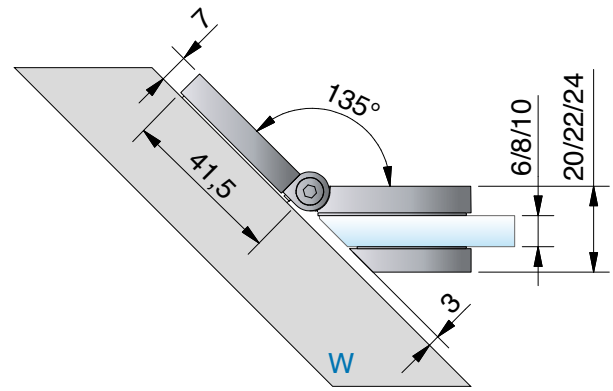

*You can request the glass processing for 6 or 10 mm glass from our technical department.

8189ZN glass-wall 135° - adjustable

MADE IN GERMANY





miter angle and hole distances for **8189ZN**

corner	hole distances from glass edge	miter angle	remarks
100°	23 mm	10°	hole slotted
105°	23 mm	15°	hole slotted
110°	22 mm	20°	hole slotted
115°	22 mm	25°	hole slotted
120°	21 mm	30°	hole slotted
125°	21 mm	35°	hole slotted
130°	-	40°	edge recess R30
135°	-	45°	edge recess R30

8198ZN glass-glass 90° - adjustable

MADE IN GERMANY



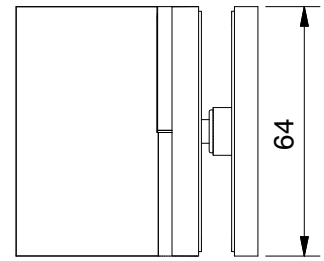

ST1

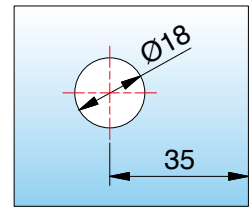

ST2

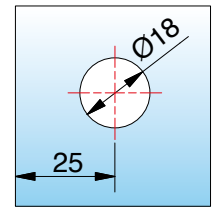

*glass processing for 8 mm glass

With other angles the miter angle and/or hole distance is changing according to chart.

article no. FLAMEA+		glass thickness
8198__		6*/8/10* mm
finish		
	ZN5	gloss chrome
	ZN1	matt chrome
	ZN10	gloss nickel
	ZNPVD20	gold optic
	ZNPVD22	stainless steel optic
	ZNPVD35	black matt
	ZN134	white matt
	ZN135	deep black matt
	ZNPVD39	gold bronze brushed
	ZNPVD40	gold optic brushed
	ZNPVD41	copper optic brushed
	ZNPVD42	graphite metal optic brushed

features

degree of angle is fully adjustable between 80° – 180°, concealed screws with cover plate

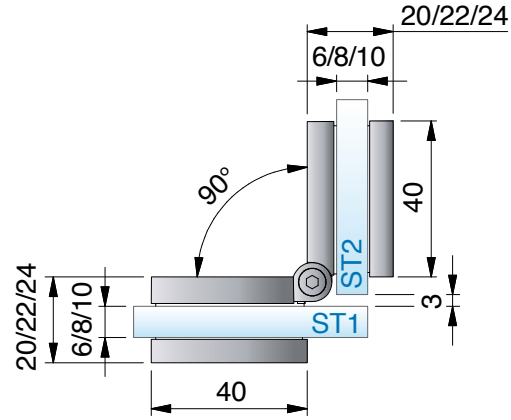



article no. FLAMEA+ LINEA		glass thickness
8198__-M1		6/8/10 mm
finish		
	ZN5	gloss chrome
	ZN135	deep black matt

*You can request the glass processing for 6 or 10 mm glass from our technical department.

ST = side panel I TF = door panel I W = wall

8198ZN glass-glass 90° - adjustable

MADE IN GERMANY

*glass processing for 8 mm glass

With other angles the miter angle and/or hole distance is changing according to chart.

*You can request the glass processing for 6 or 10 mm glass from our technical department.

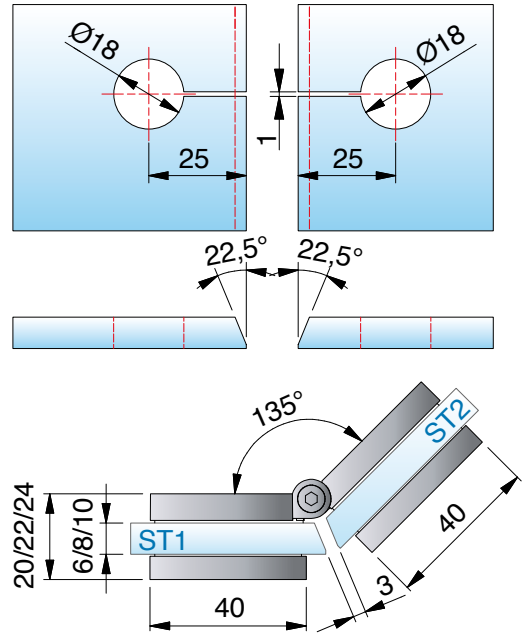

miter angle and hole distances for **8198ZN**

corner	hole distances from glass edge	miter angle	remarks
80°	36 mm	50°	-
85°	35 mm	47,5°	-
90°	33 mm	45°	-
95°	32 mm	42,5°	-
100°	31 mm	40°	hole slotted
105°	30 mm	37,5°	hole slotted
110°	29 mm	35°	hole slotted
115°	28 mm	32,5°	hole slotted
120°	28 mm	30°	hole slotted
125°	27 mm	27,5°	hole slotted
130°	26 mm	25°	hole slotted
135°	25 mm	22,5°	hole slotted
140°	25 mm	20°	hole slotted
145°	24 mm	17,5°	hole slotted
150°	23 mm	15°	hole slotted
155°	23 mm	12,5°	hole slotted
160	22 mm	10°	hole slotted
165°	22 mm	7,5°	hole slotted
170°	21 mm	5°	hole slotted
175°	20 mm	0°	hole slotted
180°	20 mm	0°	hole slotted



8195ZN wall-glass-wall 90°

MADE IN GERMANY



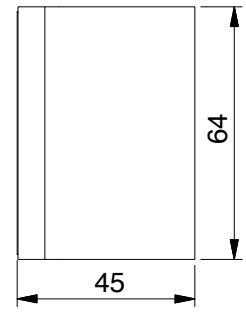

article no. FLAMEA+		glass thickness
8195__		6*/8/10* mm
finish		
	ZN5	gloss chrome
	ZN1	matt chrome
	ZN10	gloss nickel
	ZNPVD20	gold optic
	ZNPVD22	stainless steel optic
	ZNPVD35	black matt
	ZN134	white matt
	ZN135	deep black matt
	ZNPVD39	gold bronze brushed
	ZNPVD40	gold optic brushed
	ZNPVD41	copper optic brushed
	ZNPVD42	graphite metal optic brushed

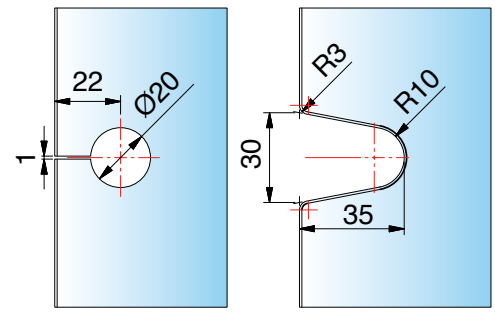

glass processing for 6/8/10 mm glass

features
double-sided fastening brackets, concealed screws with cover plate

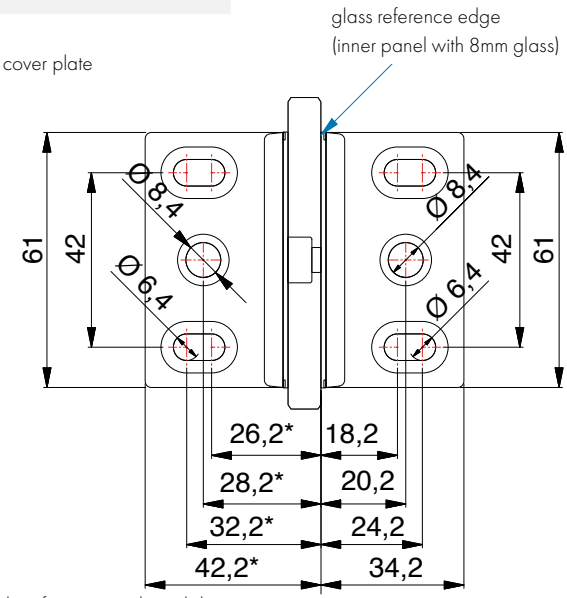

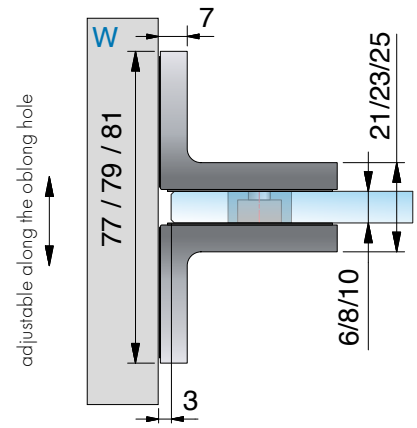

ST = side panel I TF = door panel I W = wall

*You can request the glass processing for 6 or 10 mm glass from our technical department.

8197ZN glass-glass 90°

MADE IN GERMANY



article no. FLAMEA+		glass thickness
8197__		6*/8/10* mm

finish		
	ZN5	gloss chrome
	ZN1	matt chrome
	ZN10	gloss nickel
	ZNPVD20	gold optic
	ZNPVD22	stainless steel optic
	ZNPVD35	black matt
	ZN134	white matt
	ZN135	deep black matt
	ZNPVD39	gold bronze brushed
	ZNPVD40	gold optic brushed
	ZNPVD41	copper optic brushed
	ZNPVD42	graphite metal optic brushed

features
concealed screws with cover plate

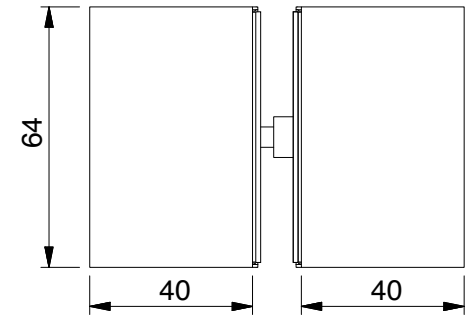

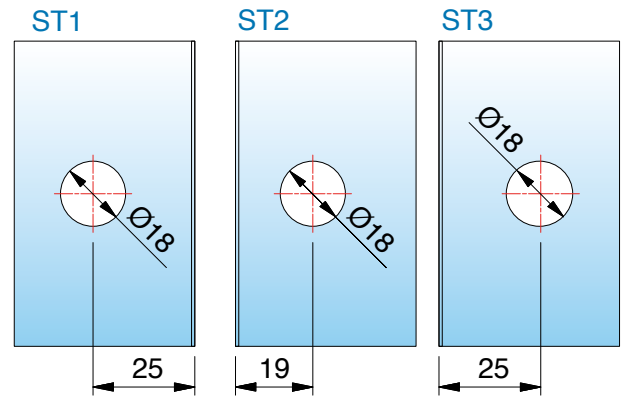

*glass processing for 8 mm glass

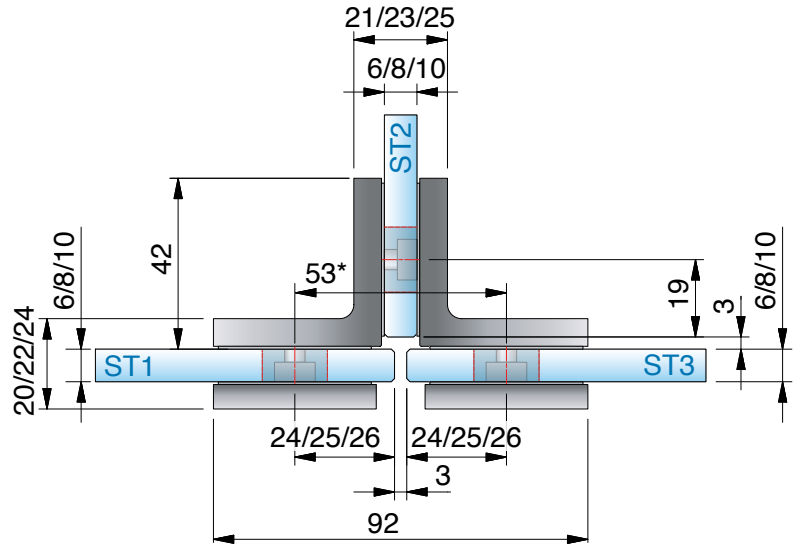

ST = side panel I TF = door panel I W = wall

*You can request the glass processing for 6 or 10 mm glass from our technical department.

available **surface colors**



ZN5
gloss chrome

compatibility chart for fittings manufacturer colors see page 14







corresponding **angle brackets**

for FARDELLO can be found on page 346.

MADE
IN
GERMANY



FARDELLO

shower swing door hinge



Faltanlage Kombination FARDELLO / FLINTER

FARDELLO – bearing capacity for modern bathroom architecture

MADE IN GERMANY

The shower swing door hinge FARDELLO is characterized by high load capacity and compact dimensions. With a height of only 56 mm, two hinges can support a maximum of 42 kg. This is made possible by the intelligent construction of the hinge: counter plate and hinge body interlock and are securely fastened together. This ensures more safety. In combination with FLINTER, various folding door systems can also be implemented..

- load capacity (2 hinges): max. permissible weight: 42 kg
- max. door panel width: 1000 mm
- glass thickness: 6/8/10 mm
- swing door hinge: glass-wall / glass-glass
- suitable angle brackets
- optimized for installation without sealing profiles
- minimized gap dimensions
- closed position fully adjustable
- the durability of the hardware has been tested internally according to DIN EN 14428:2015 5.5
- self-closing during the last 15 - 20°
- hinge height: 56 mm (like FLAMEA and FLINTER shower door hinge)
- fields of application:
  wellness area, barrier-free bathrooms, public areas






- **with easy-to-install cover:**
  To fasten the cover caps in place, they can be secured with the studsquickly and very easily into the pre-assembled EPDM molded parts andand pressed into place. To protect the caps against theft, there are still adhesive pads to hold them in place



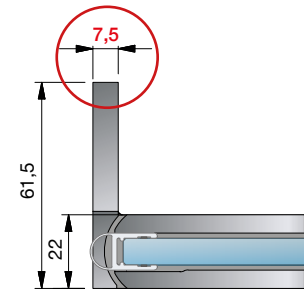

- **simple inward positioning of side panel**

With the glass-glass 90° hinge, only glass holes are required in the side panel. This allows the glass door panel to be moved inwards and the overhang (A) can be determined by the user

features

- the 7.5 mm thick wall mounting plate offers better load transfer
- the 3rd fixing hole prevents the fittings from warping on the wall
- the shower hinge is designed to allow this hole to be drilled with an 8 mm drill bit while already mounted

Please note that the instruction manual can be found on www.pauli.de.

folding systems with FARDELLO/ FLINTER

MADE IN GERMANY

FARDELLO is at its best in combination with the FLINTER series. The elegant eye-catcher with high load-bearing capacity and the smallpower pack with intelligent spring technology unfold their full capabilities and flexibility, particularly in combined bathtub andvarious folding door systems. The whole process is simple and uncomplicated to implement - with the specialist expertise of Pauli + Sohn.



FARDELLO – 8900ZN



FLINTER – 8160ZN – available with 0-3 springs



hinges with **1 spring**
for light doors



hinges with **2 springs**
for medium-heavy doors



hinges with **3 springs**
for heavy doors

The spring technology of the FLINTER shower door hinge allows you to determine the closing force of your door yourself when ordering. In the **chart on page 292**, you can find Pauli + Sohn's recommendations on the optimum closing force of the hinges, based on the door size. Please always include these in your order.

oversizes with folding systems without risk of over opening

MADE IN GERMANY

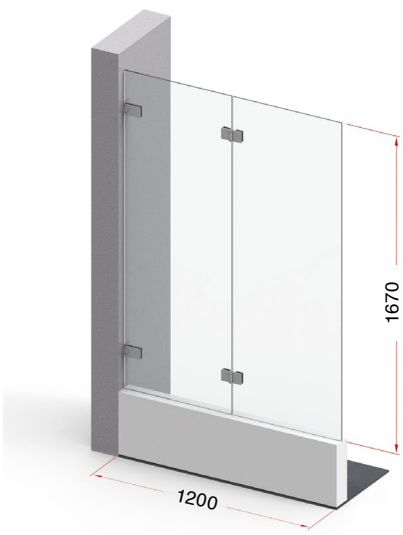

load capacity for system width 1200 mm: 40 kg

corresponds to a door height of 1670 mm with 8 mm glass

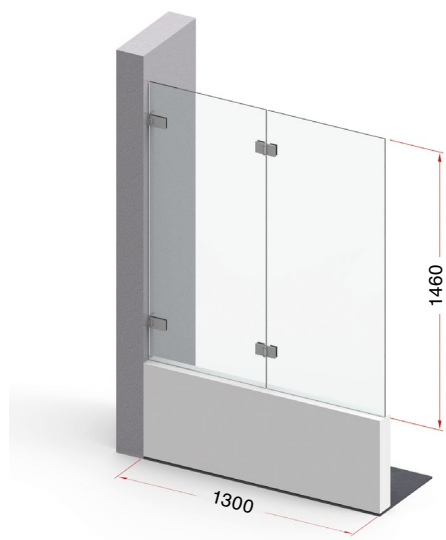

load capacity for system width 1300 mm: 38 kg

corresponds to a door height of 1460 mm with 8 mm glass

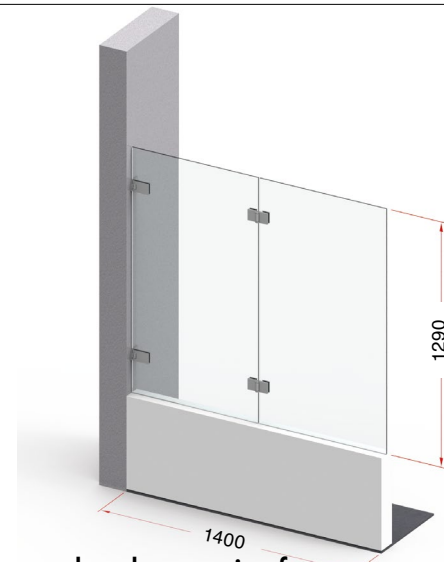

load capacity for system width 1400 mm: 36 kg

corresponds to a door height of 1290 mm with 8 mm glass

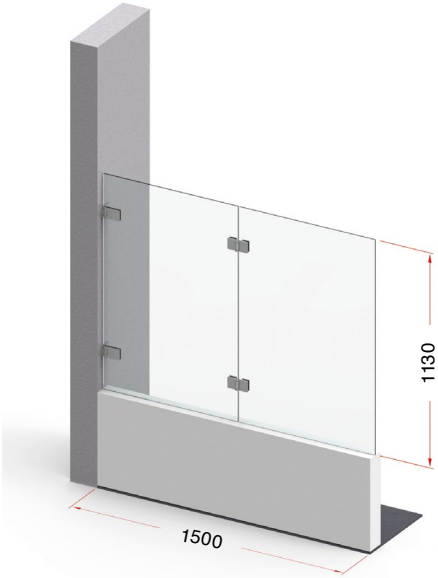

load capacity for system width 1500 mm: 34 kg

corresponds to a door height of 1130 mm with 8 mm glass







Attention: This data is only valid with optimal wall mounting and without the risk of over opening. Further information and examples of folding systems can be found from page 30.

folding systems dimensions with FARDELLO/ FLINTER – glass-wall

MADE IN GERMANY

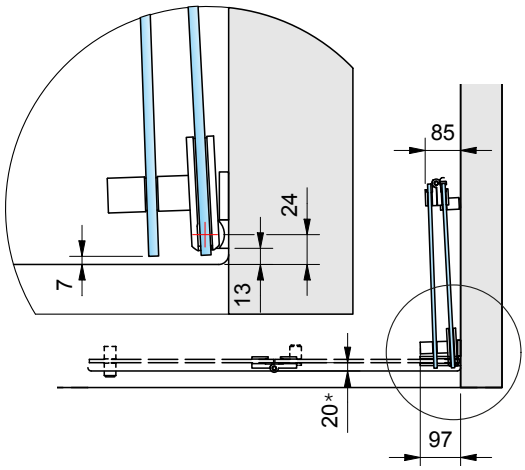

folding system 1: 8900ZN without seal profile and 8160ZN with seal profile 8865KU0

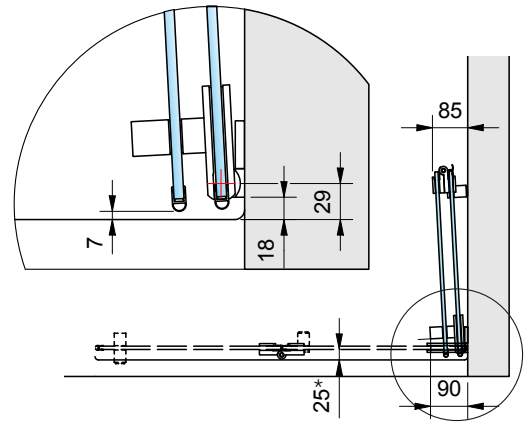

folding system 2: 8900ZN with seal profile 8861KU0 und 8160ZN with seal profile 8861KU0

* tray offset dimension









■ FARDELLO is also available in black!

folding systems dimensions with FARDELLO/ FLINTER – glass-glass

MADE IN GERMANY

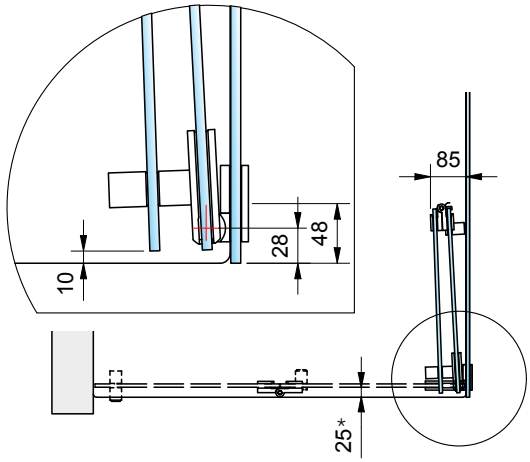

folding system 3: 8902ZN without seal profile and 8160ZN with seal profile 8865KU0

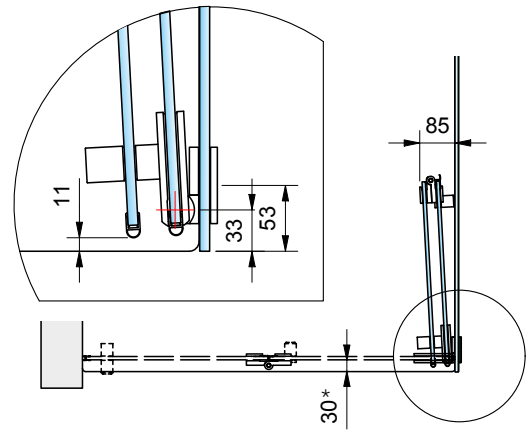

folding system 4: 8902ZN with seal profile 8861KU0 and 8160ZN with seal profile 8861KU0

* tray offset dimension







■ we recommend the seal profile: 8865KU0 (KU35) for folding door systems.

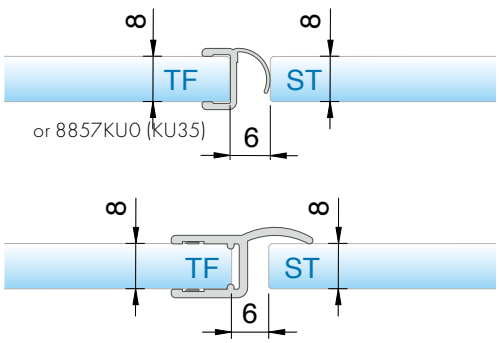

The deduction dimension of the seal applies to 8 mm glass. For 6 or 10 mm glass, please contact our application engineering department.

Hole spacing for:



8273ZN



8271ZN

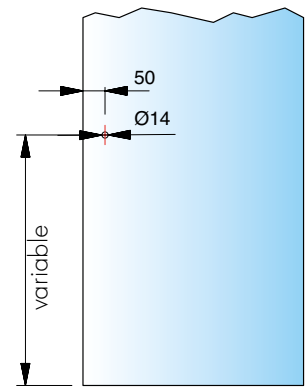

■ for more information about the knobs 8271 and 8273 see page 301

8900ZN glass-wall 90°

MADE IN GERMANY



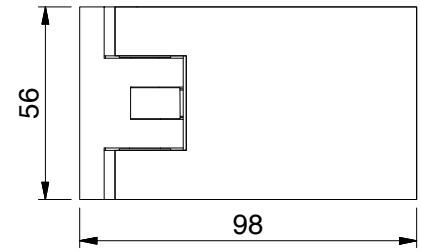

article no.	glass thickness
8900__	6*/8/10* mm



finish	
ZN5	gloss chrome

features

90° opening in both directions, with or without sealing profile, concealed screws, internal wall mounting with oblong hole adjustment, closed-position infinitely variable and adjustable as often as required, self-closing from approx. 15°-20°self-closing, sealing profile discontinued in the hinge area.

*Important

When using the hinges for 6 or 10 mm glass thickness, please use the insert set Art. No. HZ-SET5 per hinge free of charge.

*You can request the glass processing for 6 or 10 mm glass from our technical department.



glass reference edge
(inner panel with 8mm glass)

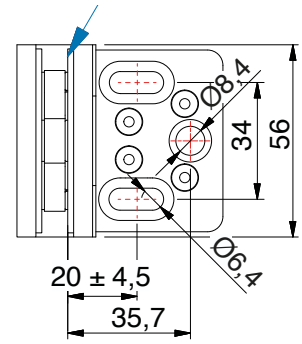



8900ZN glass-wall 90°

MADE IN GERMANY



without seal profile, *glass processing for 8 mm

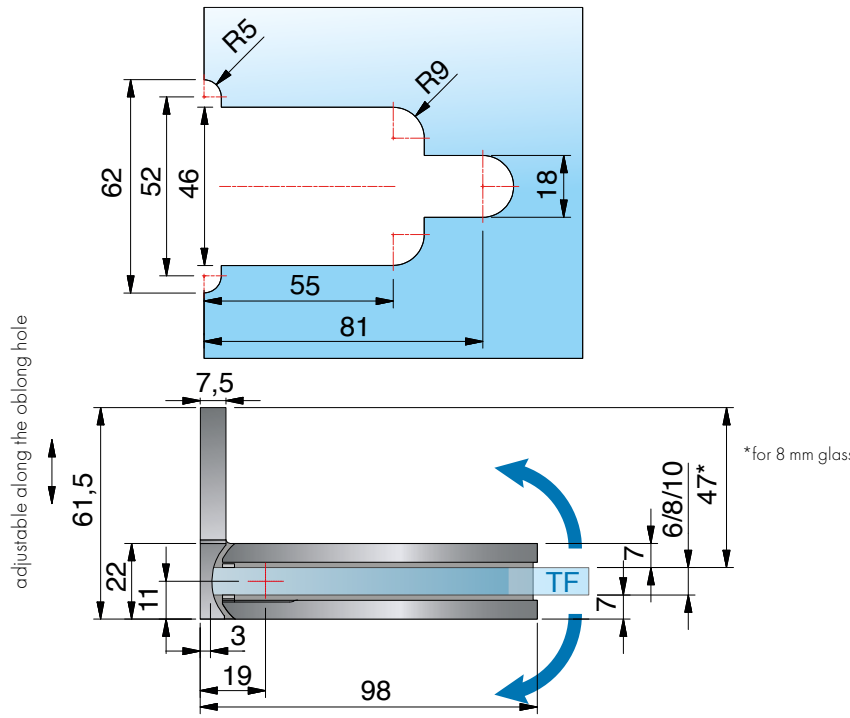



with seal profile 8861KU0-8-2010 (2500), *glass processing for 8 mm

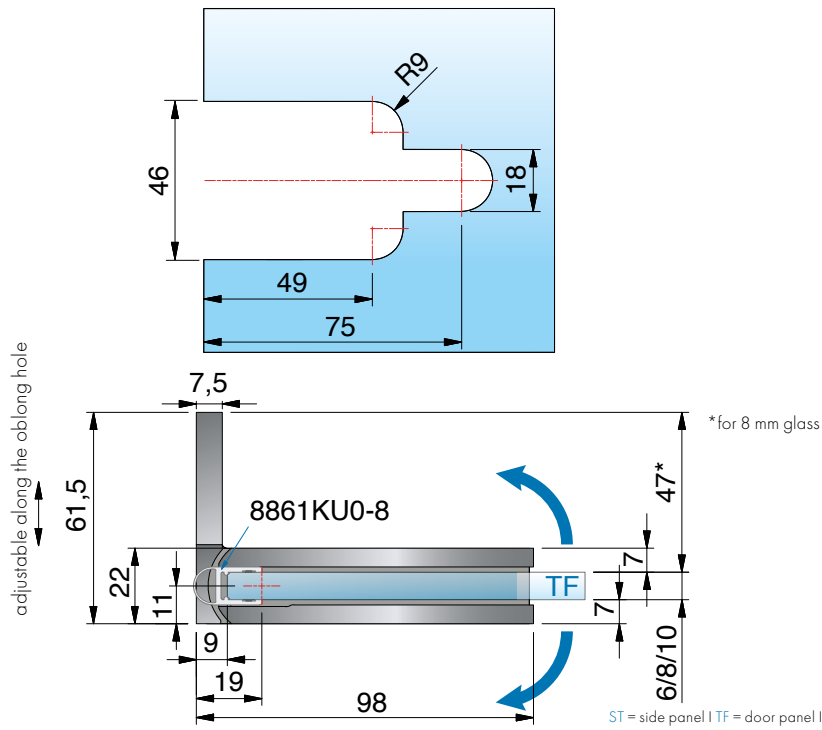

ST = side panel I TF = door panel I W = wall

8901ZN glass-glass 180°

MADE IN GERMANY



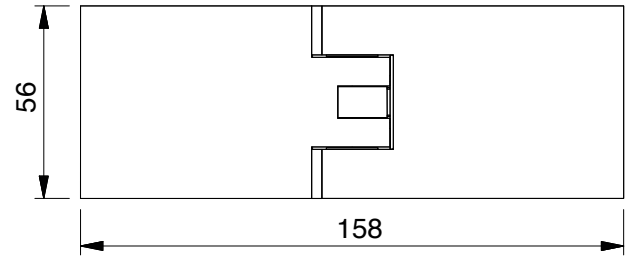

article no.		glass thickness
8901__		6*/8/10* mm
finish		
	ZN5	gloss chrome



features

90° opening in both directions, with or without sealing profile, concealed screws, closed position fully adjustable, self-closing from approx. 15°-20°, seal profile cut in the hinge area.

*Important

When using the hinges for 6 or 10 mm glass thickness, please use the insert set Art. No. HZ-SET6 per hinge free of charge.

*You can request the glass processing for 6 or 10 mm glass from our technical department.

8901ZN glass-glass 180°

MADE IN GERMANY



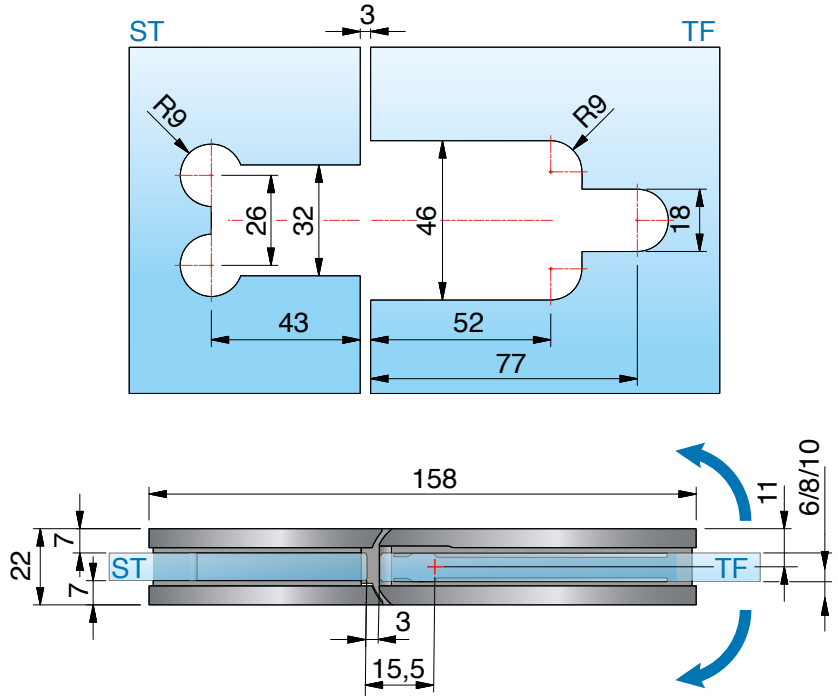

without seal profile, *glass processing for 8 mm



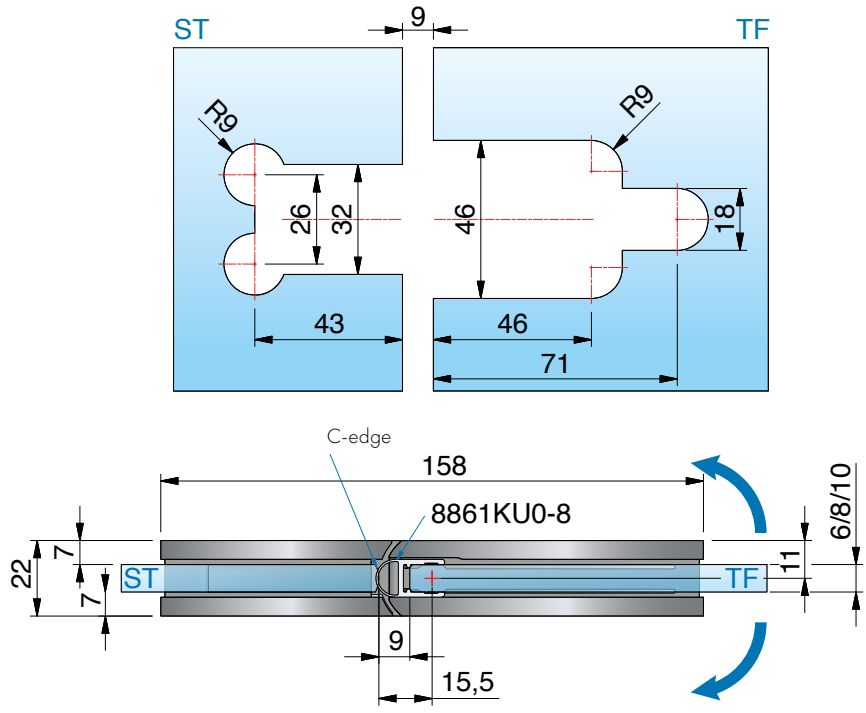

with seal profile 8861KU0-8-2010 (2500), *glass processing for 8 mm

ST = side panel I TF = door panel I W = wall

8901ZN glass-wall 90°

MADE IN GERMANY



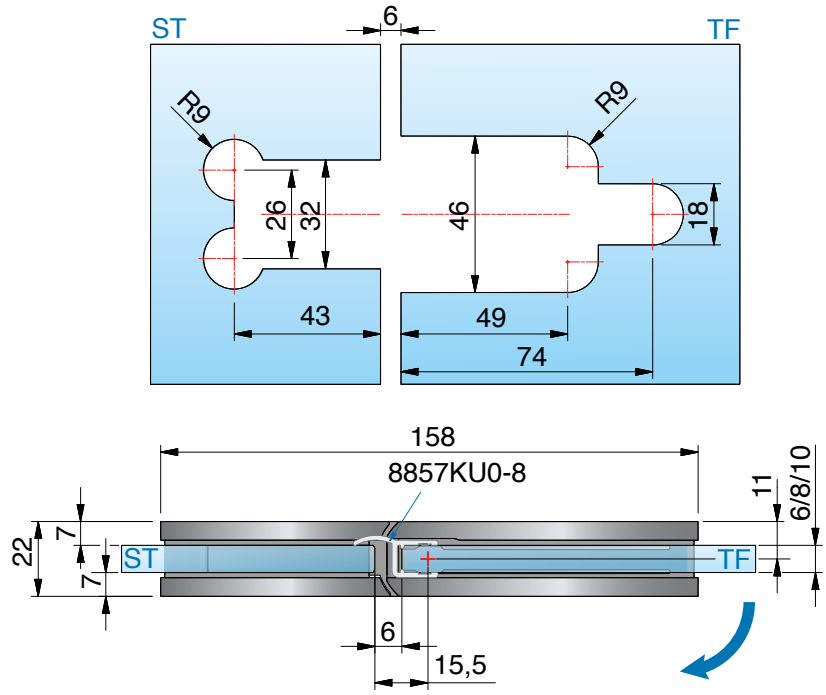

with sealing profile 8857KU0-8K-2010 (2500), for glass 8 mm



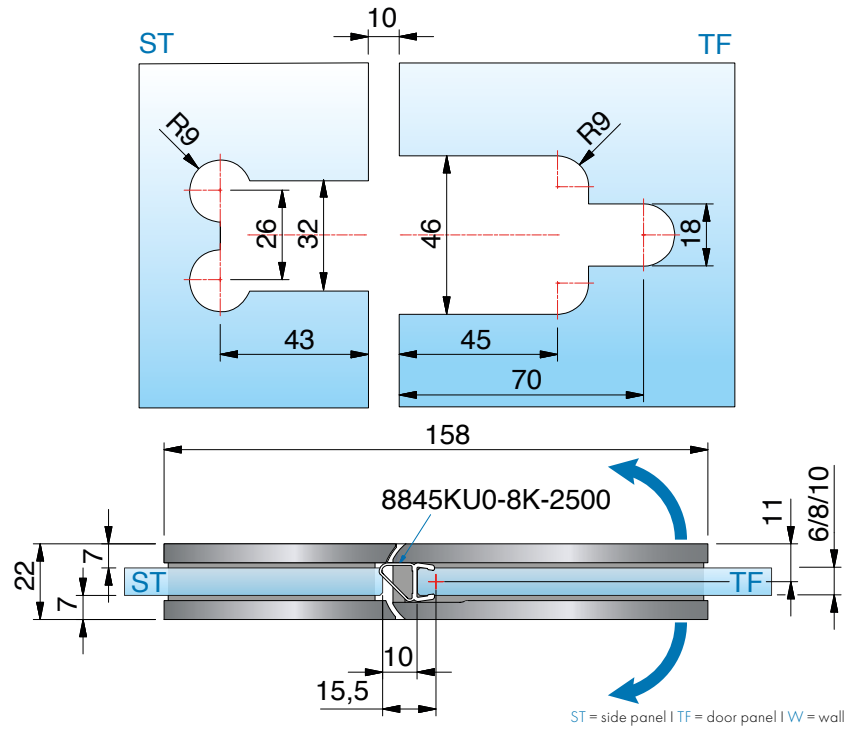

with sealing profile 8845KU0-8K-2500, for glass 8 mm

ST = side panel I TF = door panel I W = wall

8901ZN glass-wall 90°

MADE IN GERMANY



8902ZN glass-glass 90°

MADE IN GERMANY



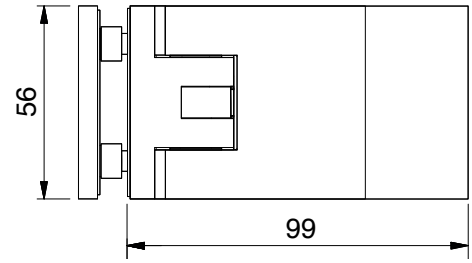

article no.	glass thickness
8902__	6*/8/10* mm

finish

ZN5 gloss chrome

features

90° opening in both directions, with or without sealing profile, concealed screws, closed position fully adjustable, self-closing from approx. 15°-20°, seal profile cut in the hinge area.
**offset dimension (A) of the side panel can be determined by the user.

*Important

When using the hinges for 6 or 10 mm glass thickness, please use the insert set Art. No. HZ-SET5 per hinge free of charge.
*You can request the glass processing for 6 or 10 mm glass from our technical department.



simple inward positioning of side panel

With the glass-glass 90° hinge, only glass holes are required in the side panel. This allows the glass door panel to be moved inwards and the overhang (A) can be determined by the user

8902ZN glass-glass 90°

MADE IN GERMANY



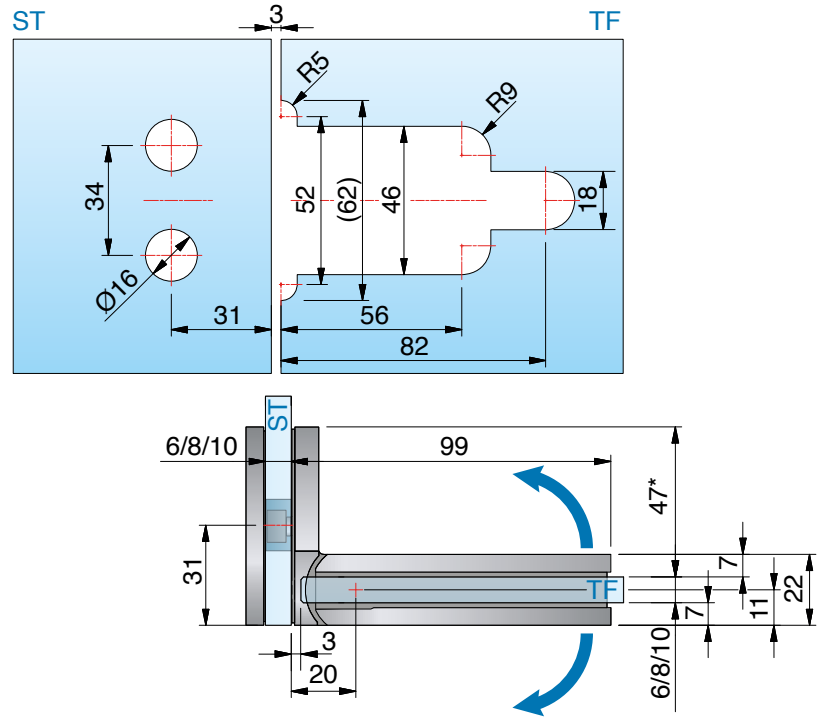

without seal profile, *glass processing for 8 mm, 7 mm set inwards

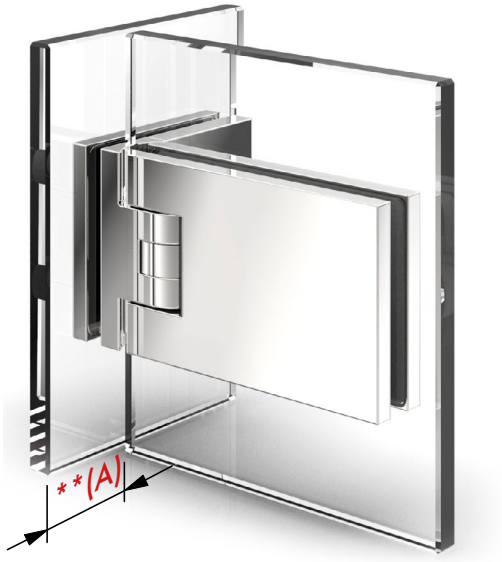

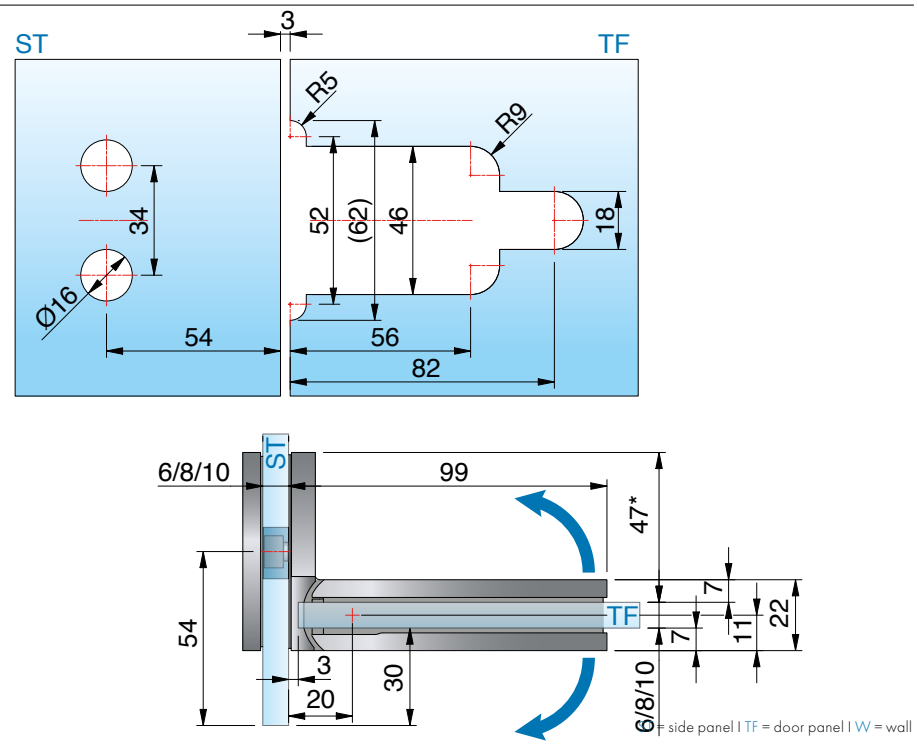

without seal profile, *glass processing for 8 mm, 30 mm set inwards

ST = side panel I TF = door panel I W = wall

8902ZN glass-glass 90°

MADE IN GERMANY

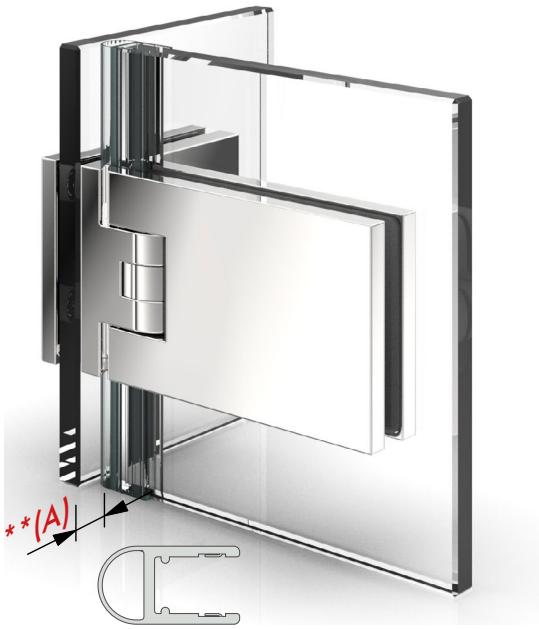

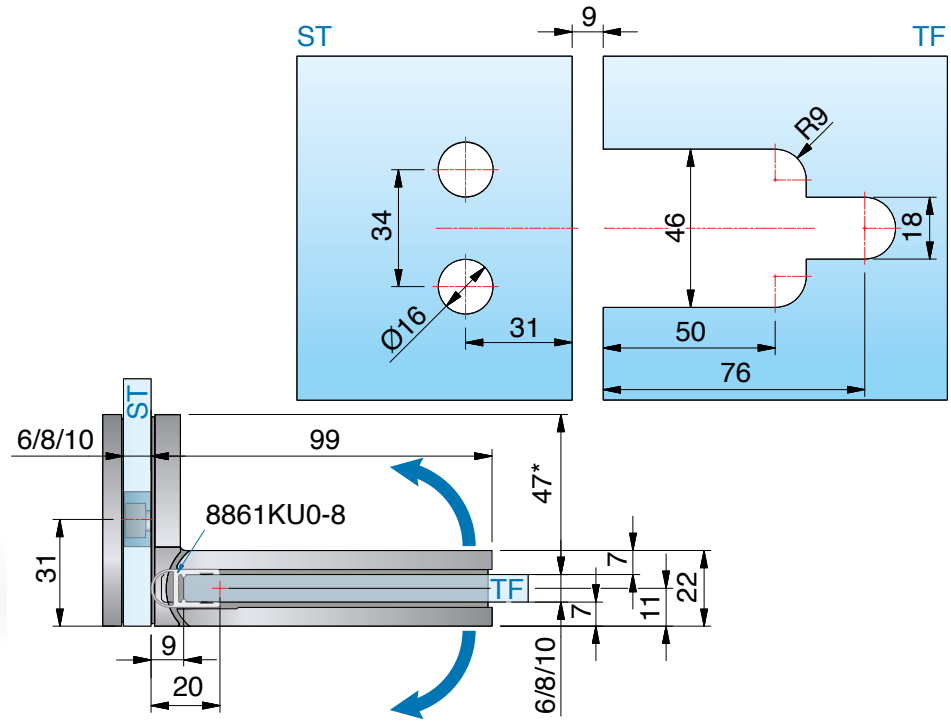

without seal profile, *glass processing for 8 mm, 7 mm set inwards



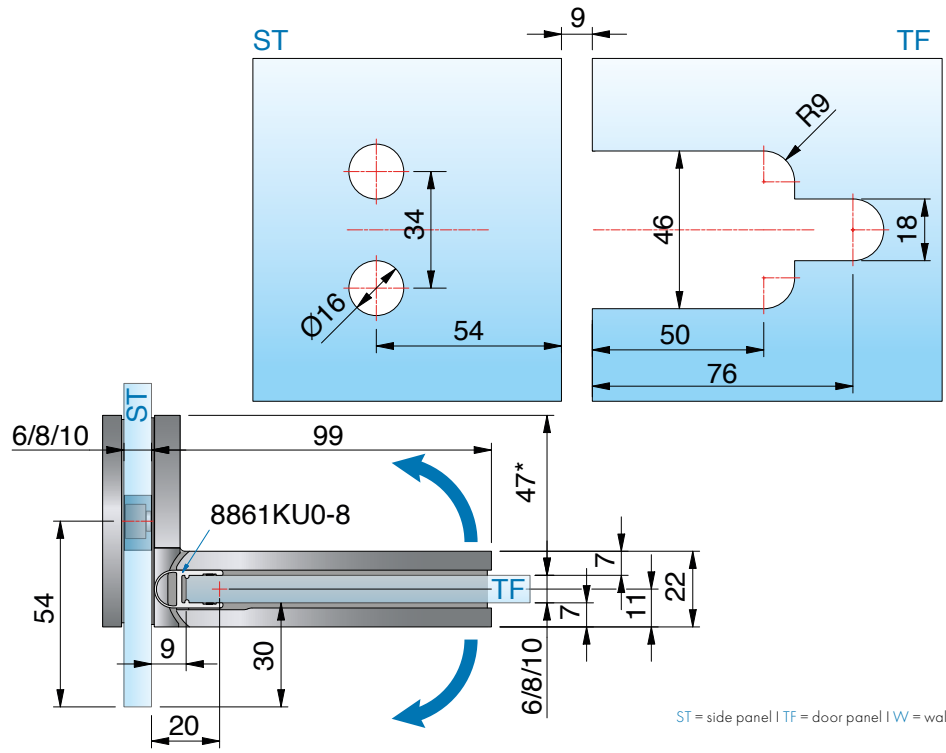

without seal profile, *glass processing for 8 mm, 30 mm set inwards

ST = side panel I TF = door panel I W = wall

8902ZN glass-glass 90°

MADE IN GERMANY

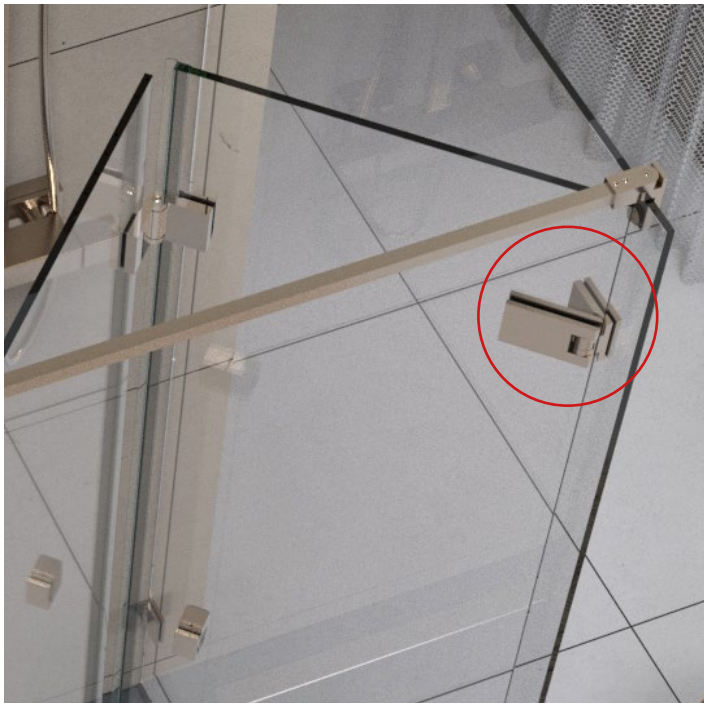



Fardello / Flinter combination in special colour

available **surface colors**



ZN5
gloss chrome

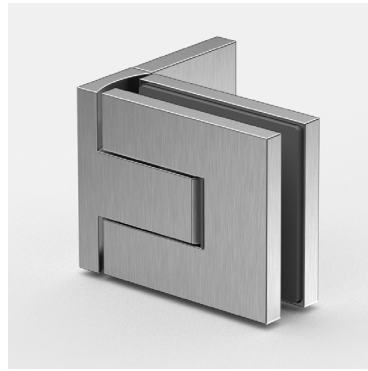

ZNPVD22
stainless steel optic

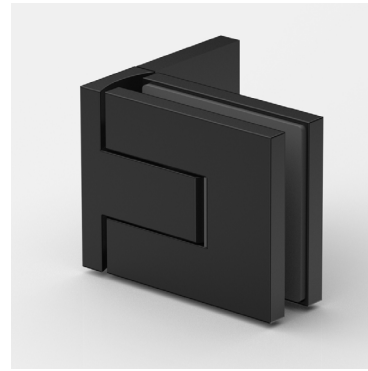

ZN135
deep black matt



ZNPVD39
gold bronze brushed



ZNPVD40
gold optic brushed

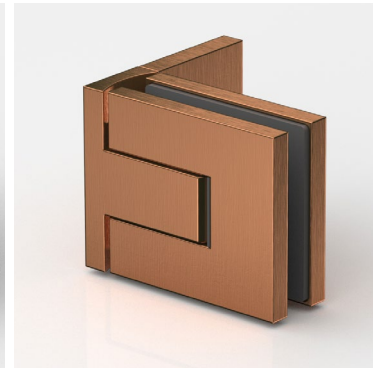

ZNPVD41
copper optic brushed

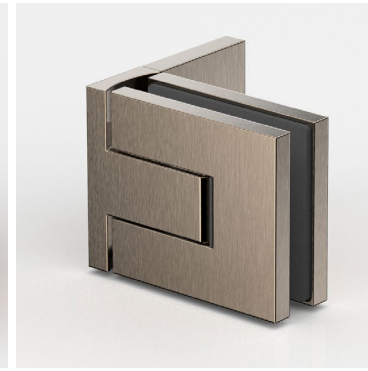

ZNPVD42
graphite metal optic brushed

compatibility chart for fittings manufacturer colors see page 14



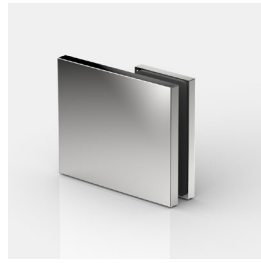

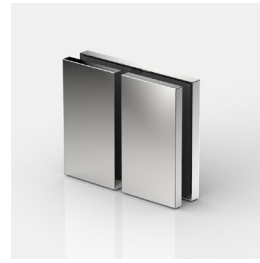



corresponding **angle brackets**

for FLAMEA pro mini can be found on page 346.

MADE IN GERMANY



FLAMEA pro mini

shower swing door hinge



FLAMEA pro mini – small format, high performance

MADE IN GERMANY

The shower door hinge combines innovative technology and sophisticated design,to meet the highest demands in the field of modern shower systems.in the field of modern shower systems. The hinge is designed for an opening angle on both sidesof 97°, which ensures convenient handling and flexibility of use.and flexibility of use. It is a swing door hinge that can be usedsuitable for both glass-to-wall and glass-to-glass applications.applications. Another outstanding feature is the optimised design for use withoutwithout sealing profiles, whereby minimised gap dimensions are achieved.are minimised. This not only improves the appearance, but also reduces themaintenance effort.
The innovative cap technology makes installation considerably easier,while the concealed zero position adjustment.

- load capacity (2 hinges): max. permissible weight: 38 kg, max. door panel width: 900 mm
- glass thickness: 8/10 mm
- opening angle of the hinge 97° possible on both sides
- swing door hinge: glass-wall / glass-glass
- matching angle brackets
- sealing profile spaced on the fitting side in the hinge area
- optimized for installation without sealing profiles
- minimized gap dimensions
- self-closing over the last few centimeters
- convenient installation thanks to innovative cover-cap-technology
- concealed closed-position adjustment
- areas of application:
  wellness area, barrier-free bathrooms, commercial projects

innovative techniques

MADE IN GERMANY





- **with easy-to-install cover:**
  To fasten the cover caps in place, they can be secured with the studsquickly and very easily into the pre-assembled EPDM molded parts andand pressed into place. To protect the caps against theft, there are still adhesive pads to hold them in place





- **Suitable angle brackets**
  for many desired situations

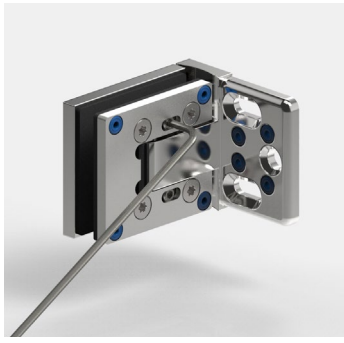
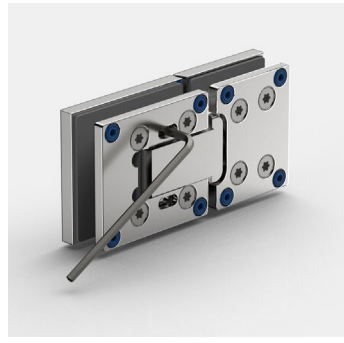
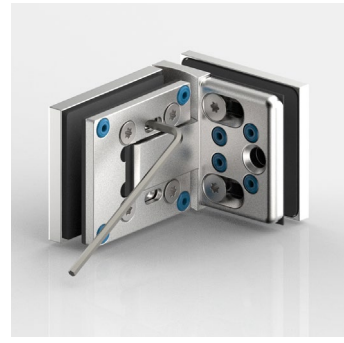


- **innovative, force-fit system for stepless close position setting,**
  which allows repeated adjustments without causing mechanical damage.

Please note that the instruction manual at www.pauli.de.

innovative techniques

MADE IN GERMANY





For glass-glass 90°, only drilled holes are required in the side panel, so that the glass door panel is set inwards and the overhang (A) can be determined by the installer. (A).





- **enlarged opening angle:**
  - opening angle of the hinge 97° possible on both sides
  - Very well suited for barrier-free areas
  - Easier access even in small bathrooms
  - Safety reserves against incorrect operation
  - Prevents doors from being pushed too hard

innovative techniques

MADE IN GERMANY

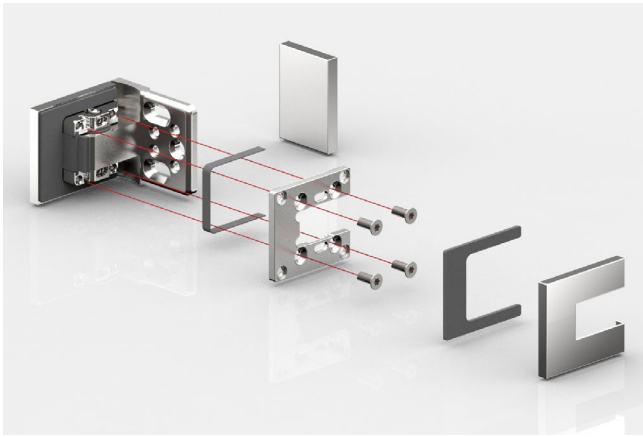

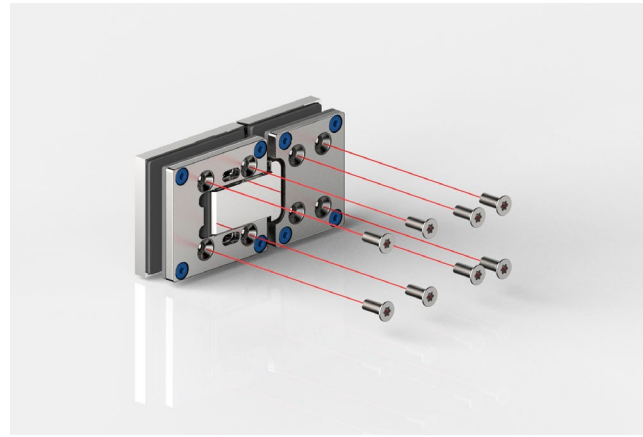

- Fitting body and counterplate **interlock in the fitting body** and are secured with four screws with TX 25 drive for maximum contact pressure

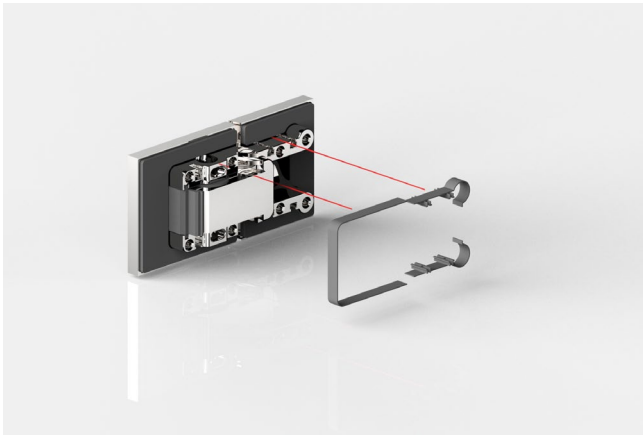

- **Inserted edge protection**
  for greater protection within the fitting

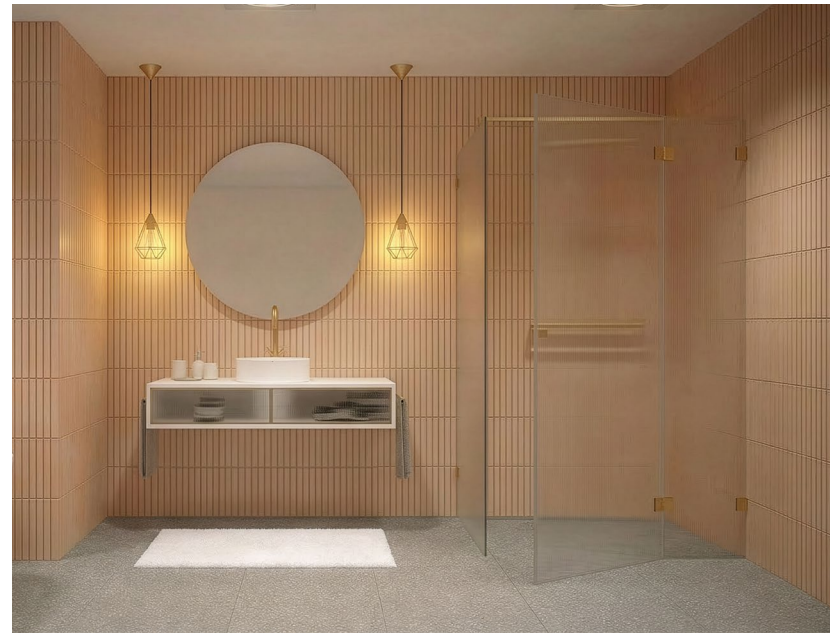



ZNPVD40

- **Many new finishes:** example gold optic brushed
- compatibility chart for fittings manufacturer colors
  see page 14

8330ZN glass-wall 90°

MADE IN GERMANY



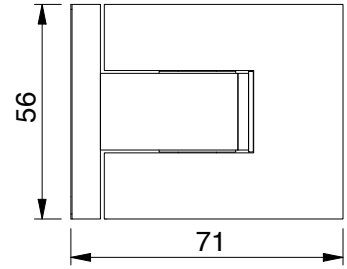

features

97° opening in both directions, one-sided mounting bracket, oblong hole, slotted hole adjustment with cover cap, infinitely adjustable closed-position, self-closing on the last centimetres, sealing profile interrupted on the hardware side in the hinge area, Load capacity (2 hinges) 38 kg (max. door panel width 900 mm)

*important

when using the hinges for 10 mm glass, please order the insert-set:
for **6 mm glass insert-set art. no. HZ-SET20**
for **10 mm glass insert-set art. no. HZ-SET18**
*You can request the glass processing for 6 or 10 mm glass from our technical department.

article no.		glass thickness
8330__		6* 8/10* mm
finish		
ZN5	gloss chrome	
ZNPVD22	stainless steel optic	
ZN135	deep black matt	
ZNPVD39	gold bronze brushed	
ZNPVD40	gold optic brushed	
ZNPVD41	copper optic brushed	
ZNPVD42	graphite metal optic brushed	

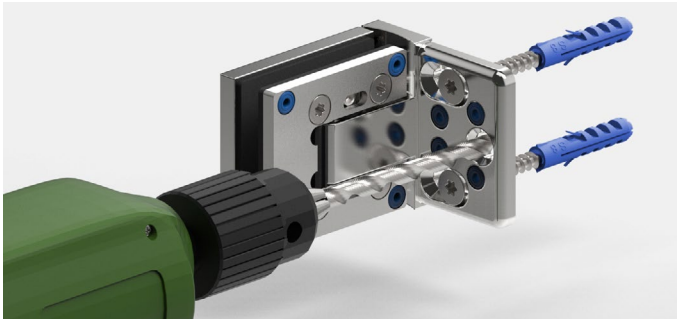

The 3rd fixing hole prevents the fittings from twisting on the wall. The shower hinge is designed in such a way that this hole can be drilled with an 8 mm drill bit while mounted.

glass reference edge
(inner panel with 8 mm glass)

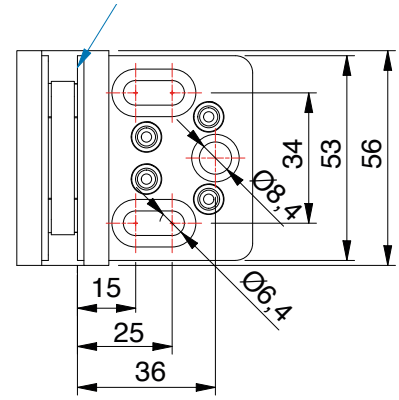

8330ZN glass-wall 90°

MADE IN GERMANY



without seal profile, *glass processing for 8 mm

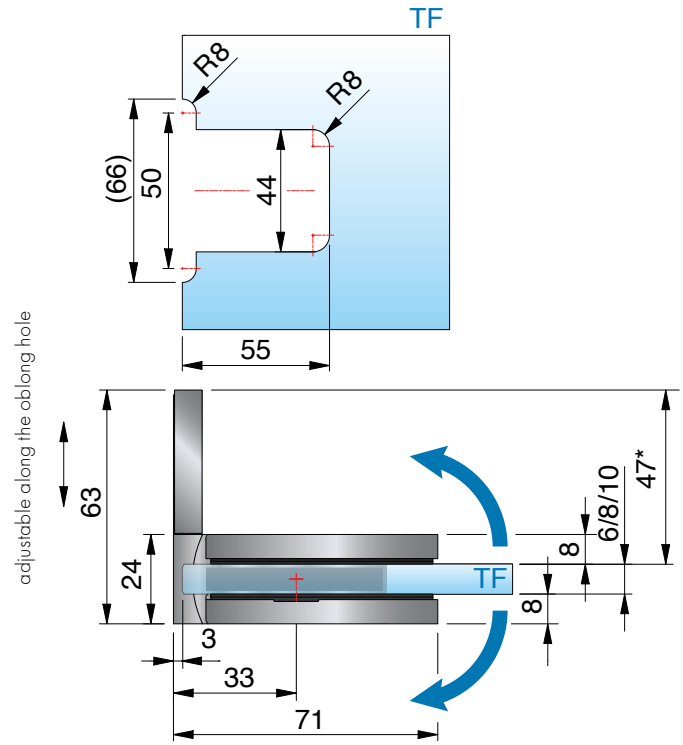



with seal profile 8861KU0-8-2010 (2500), *glass processing for 8 mm

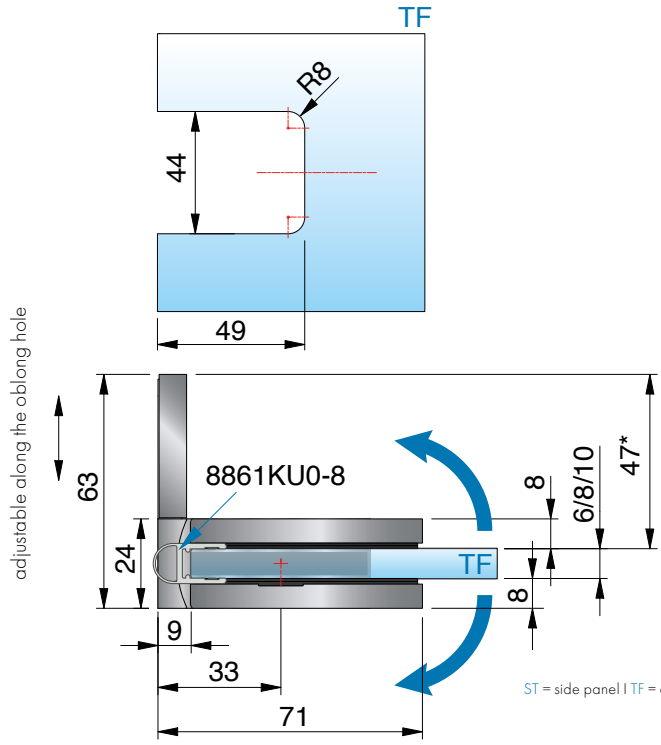

ST = side panel I TF = door panel I W = wall

8332ZN glass-glass 180°

MADE IN GERMANY



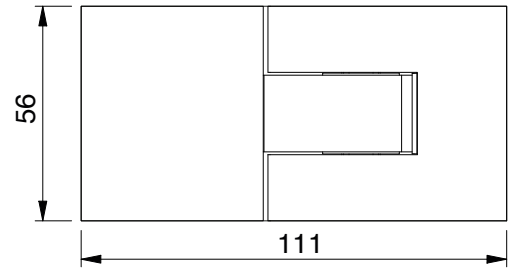

features
97° opening in both directions, adjustment with cover cap, infinitely adjustable closed-position, self-closing on the last centimetres, sealing profile interrupted on the hardware side in the hinge area, Load capacity (2 hinges) 38 kg (max. door panel width 900 mm)

article no.	glass thickness
8332__	6* 8/10* mm



finish	
ZN5	gloss chrome
ZNPVD22	stainless steel optic
ZN135	deep black matt
ZNPVD39	gold bronze brushed
ZNPVD40	gold optic brushed
ZNPVD41	copper optic brushed
ZNPVD42	graphite metal optic brushed

*important
when using the hinges for 10 mm glass, please order the insert-set:
for **6 mm glass insert-set art. no. HZ-SET21**
for **10 mm glass insert-set art. no. HZ-SET19**
*You can request the glass processing for 6 or 10 mm glass from our technical department.

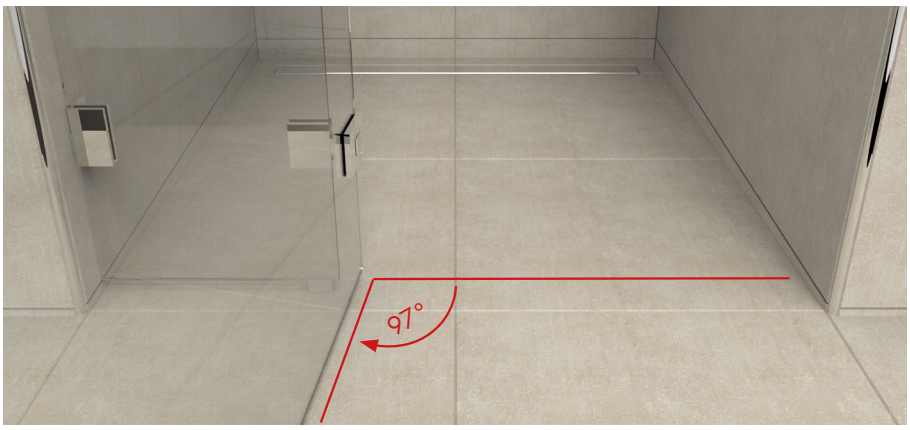

- **enlarged opening angle:**
  - opening angle of the hinge 97° possible on both sides
  - Very well suited for barrier-free areas
  - Easier access even in small bathrooms
  - Safety reserves against incorrect operation
  - Prevents doors from being pushed too hard

8332ZN glass-glass 180°

MADE IN GERMANY



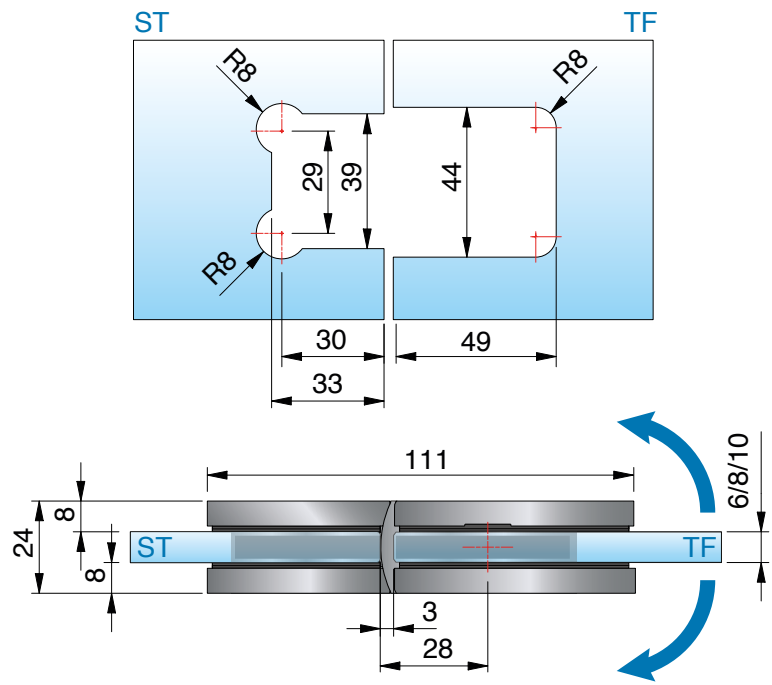

without seal profile, *glass processing for 8 mm



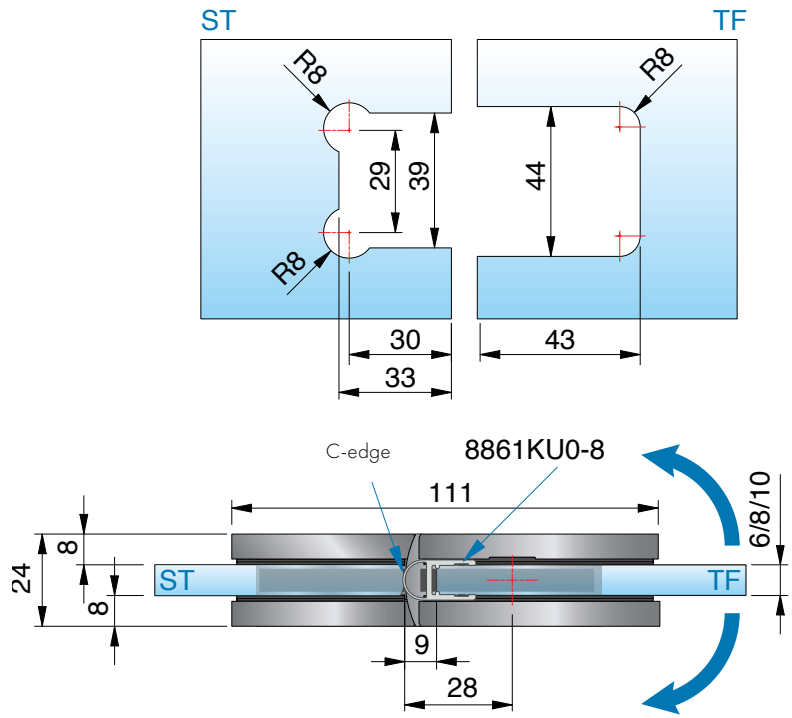

with seal profile 8861KU0-8-2010 (2500), *glass processing for 8 mm

ST = side panel I TF = door panel I W = wall

8332ZN glass-glass 180°

MADE IN GERMANY



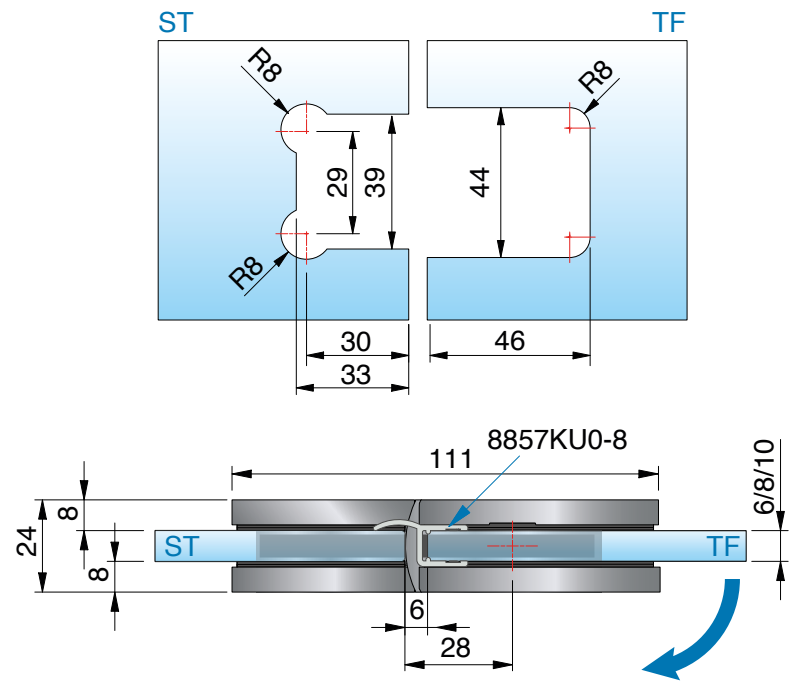

with seal profile 8857KU0-8-2010(2500), *glass processing for 8 mm



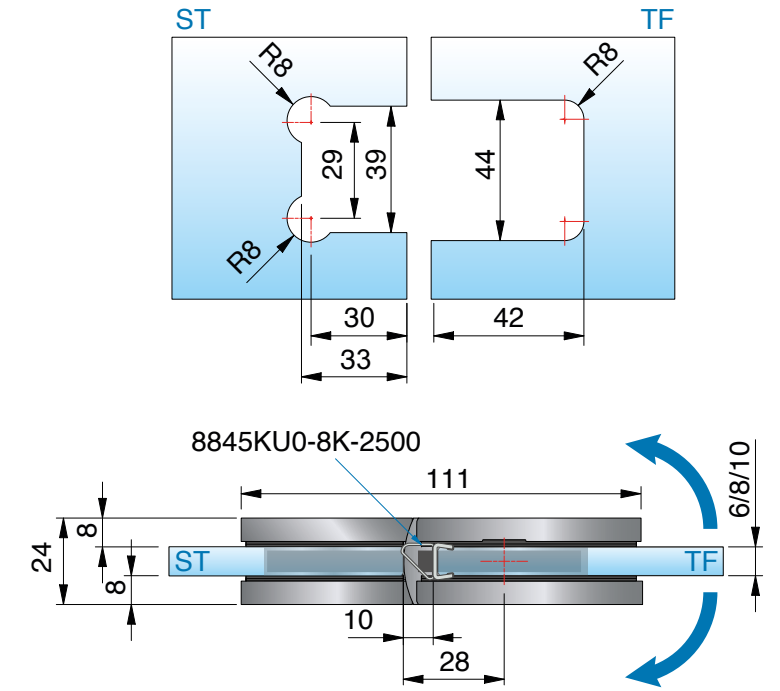

with seal profile 8845KU0-8K-2500, *glass processing for 8 mm

ST = side panel I TF = door panel I W = wall



8334ZN Glas-Glas 90°

MADE IN GERMANY



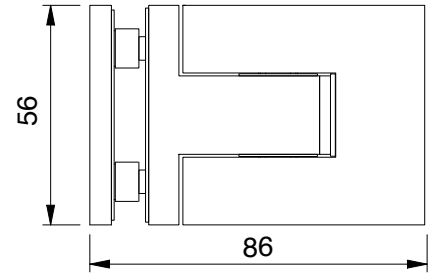

features

97° opening in both directions, one-sided mounting bracket, with cover cap, infinitely adjustable closed-position, self-closing on the last centimetres, sealing profile interrupted on the hardware side in the hinge area, Load capacity (2 hinges) 38 kg (max. door panel width 900 mm)

article no.	glass thickness
8334__	6* 8/10* mm

finish		
	ZN5	gloss chrome
	ZNPVD22	stainless steel optic
	ZN134	white matt
	ZN135	deep black matt
	ZNPVD39	gold bronze brushed
	ZNPVD40	gold optic brushed
	ZNPVD41	copper optic brushed
	ZNPVD42	graphite metal optic brushed

*important

when using the hinges for 10 mm glass, please order the insert-set:
for **6 mm glass insert-set art. no. HZ-SET20**
for **10 mm glass insert-set art. no. HZ-SET18**
*You can request the glass processing for 6 or 10 mm glass from our technical department.

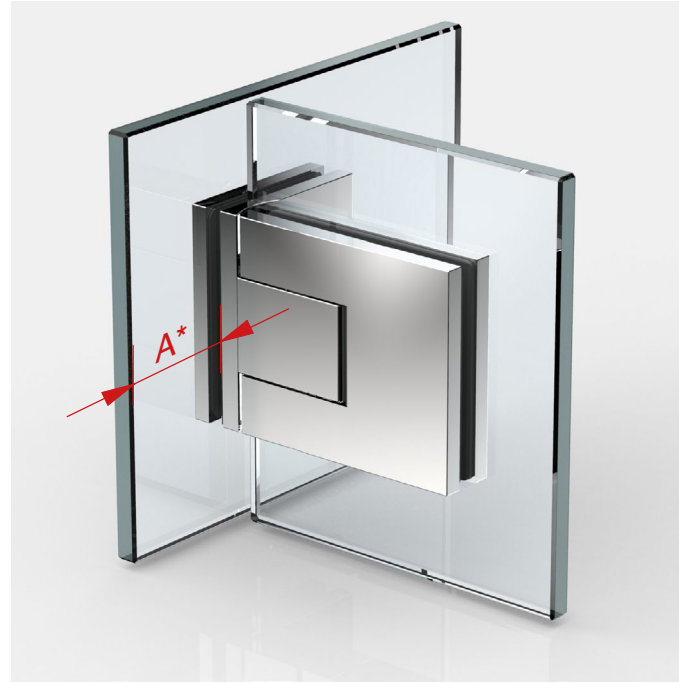

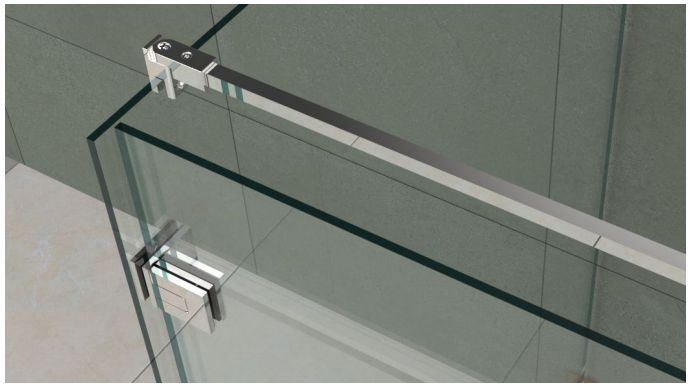

For glass-glass 90°, only drilled holes are required in the side panel, so that the glass door panel is set inwards and the overhang (A) can be determined by the installer.

8334ZN Glas-Glas 90°

MADE IN GERMANY



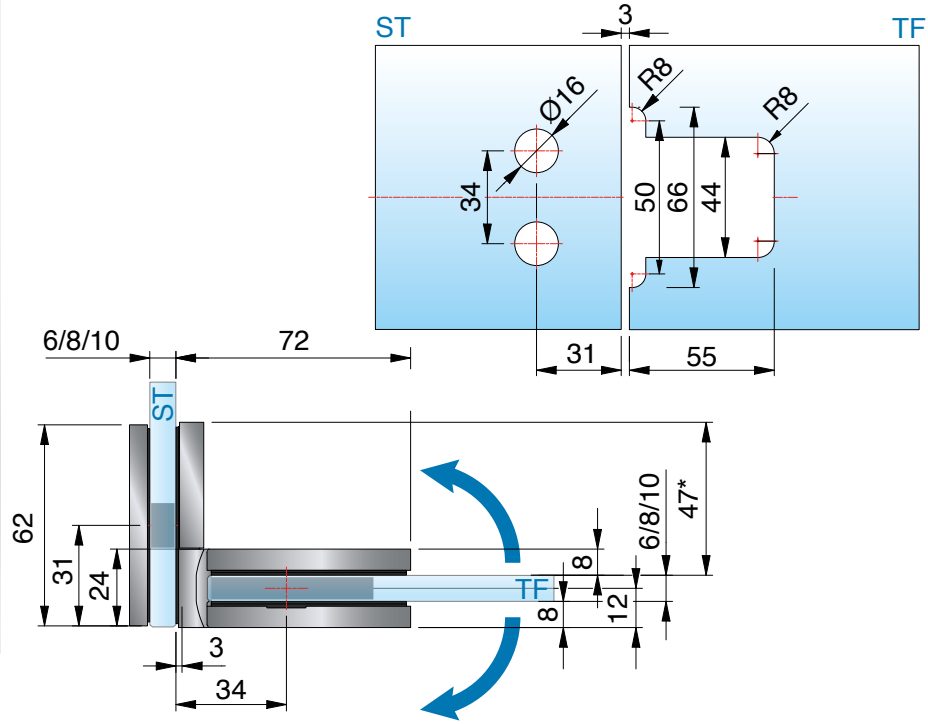

without seal profile, *glass processing for 8 mm



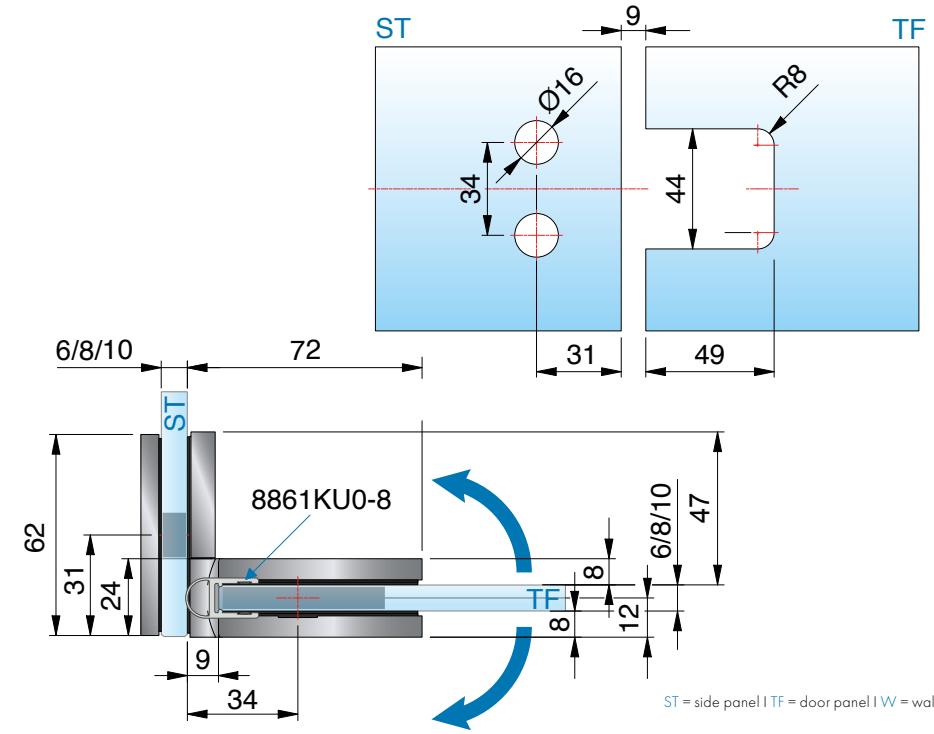

with seal profile 8861KU0-8-2010 (2500), *glass processing for 8 mm

ST = side panel I TF = door panel I W = wall

available **surface colors**

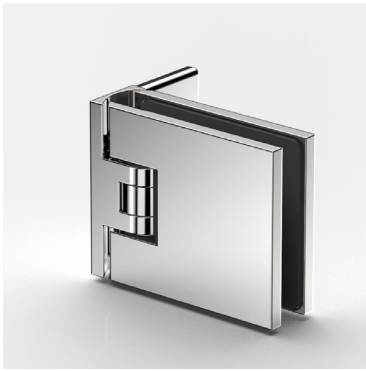

ZN5
gloss chrome

compatibility chart for fittings manufacturer colors see page 14







corresponding **angle brackets**

for FLAMEA can be found on page 346.

MADE
IN
GERMANY



FLAMEA

shower swing door hinge



FLAMEA – consequent: formal-aesthetic

MADE IN GERMANY

FLAMEA is the epitome of design and function – this stylish variant combines intelligent technology and functionality. The successful reduction to the essentials – a highlight for enthusiasts. The continuously adjustable zero position and the option of dispensing with a sealing profile ensure perfect adaptation to a wide variety of installation situations.

- self-closing during the last 15 - 20°
- centered pivot-point, therefore usage as swing door possible
- fully adjustable closed position
- load capacity (2 hinges): 36 kg
  corresponding to a glass door with the dimension 900 x 2000 mm and a glass thickness of 8 mm
- optimized for application without using sealing profiles
- the durability of the hardware has been tested internally according to DIN EN 14428:2015 5.5

- 90° shower swing door hinge



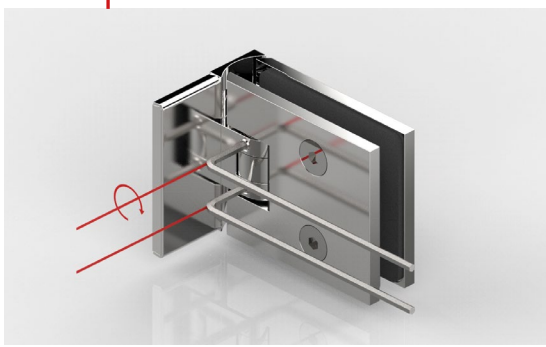





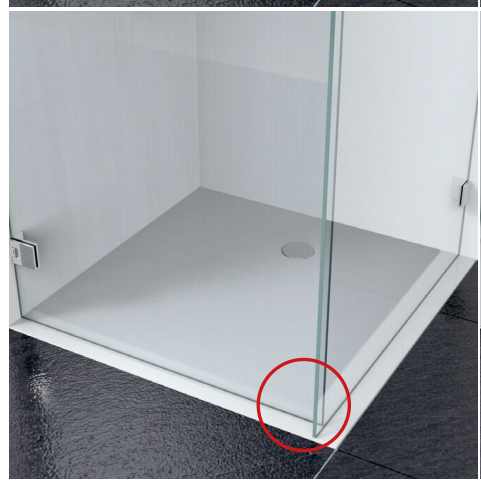



The closed position can be fully adjusted as often as needed. Due to the fully adjustable closed-position, the hinges can be mounted much faster, even on walls that are not aligned to each other.

- by positioning the glass within the shower area, a natural splash guard is created



general remarks:

- depending on the loading transfer to the wall, please also take the small mounting plate into consideration
- perpendicular mounting of the shower door hinge on solid surfaces

Please note that the instruction manual can be found on www.paili.de

8180ZN glass-wall 90°

MADE IN GERMANY



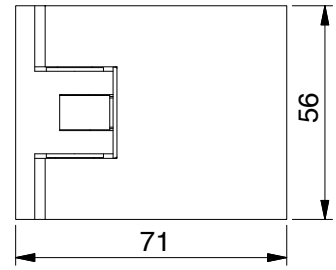

article no.	glass thickness
8180__	6*/8/10* mm

finish

ZN5 gloss chrome

features

opens in- and outwards 90°, with adjustable closed position, adjustable anlong the oblong hole, single sided mounting plate

shim plates in thicknesses 2/3/5/10 mm can be found on page XX

*Important

When using the hinges for 6 or 10 mm glass thickness, please use the insert set Art. No. HZ-SET1 per hinge free of charge.

*You can request the glass processing for 6 or 10 mm glass from our technical department.



glass reference edge
(inner panel with 8mm glass)

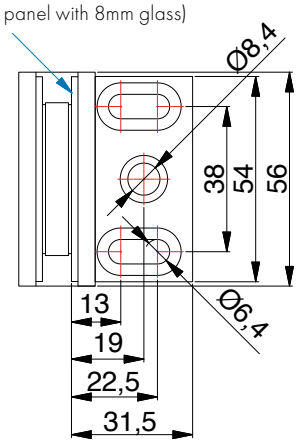

8180ZN glass-wall 90°

MADE IN GERMANY



without seal profile, *glass processing for 8 mm

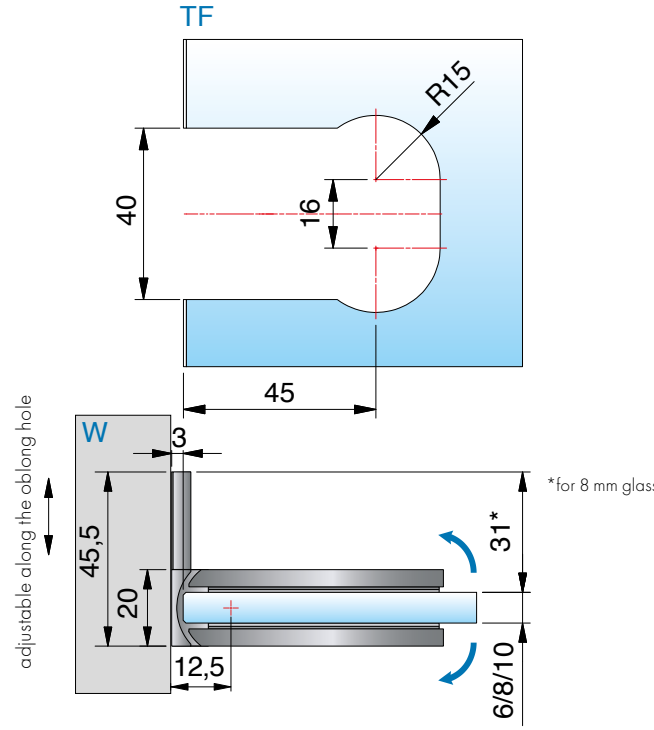

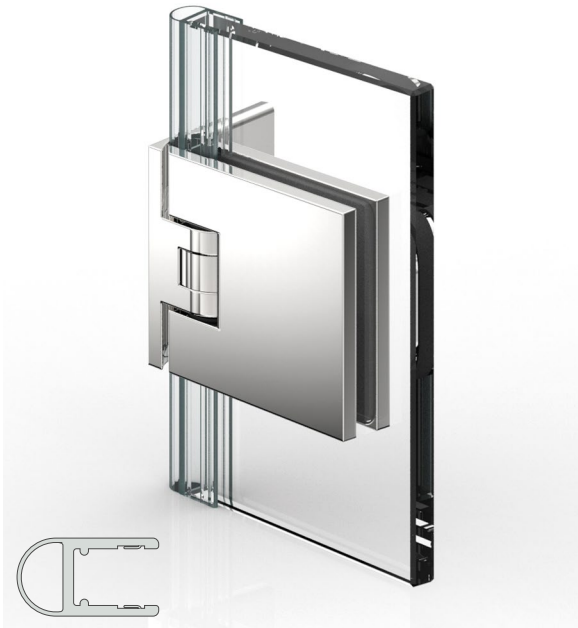

with seal profile 8861KU0-8-2010 (2500), *glass processing for 8 mm

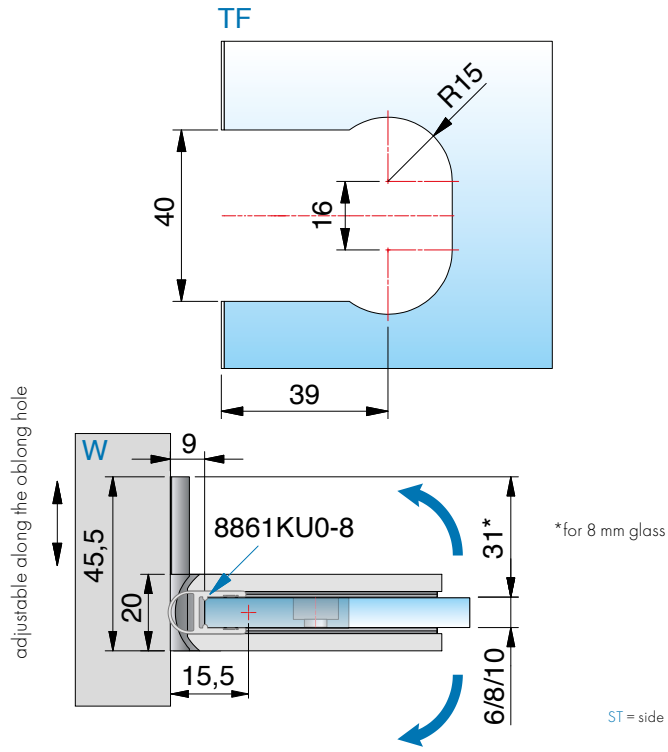

ST = side panel I TF = door panel I W = wall

8182ZN glass-wall 90°

MADE IN GERMANY



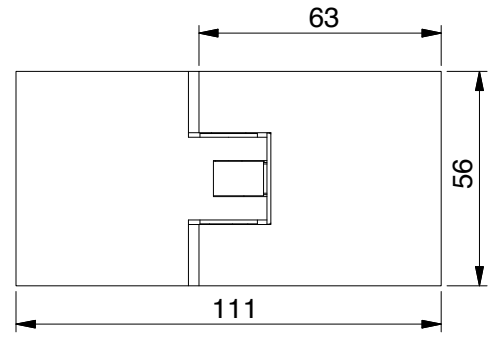

article no.	glass thickness
8182__	6*/8/10* mm

finish

ZN5 gloss chrome

features

depending on the used seal profile, opens in- and outwards 90°, with adjustable closed position

*Important

When using the hinges for 6 or 10 mm glass thickness, please use the insert set Art. No. HZ-SET2 per hinge free of charge.

*You can request the glass processing for 6 or 10 mm glass from our technical department.

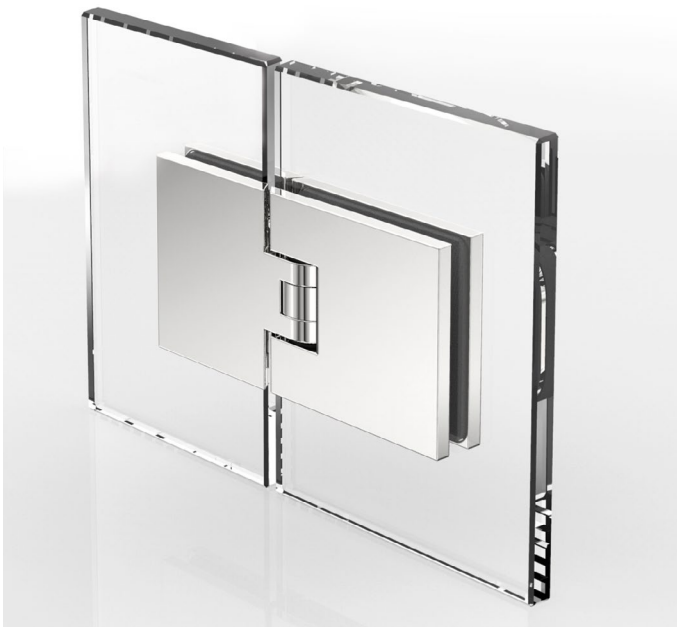

without seal profile, for 8 mm glass

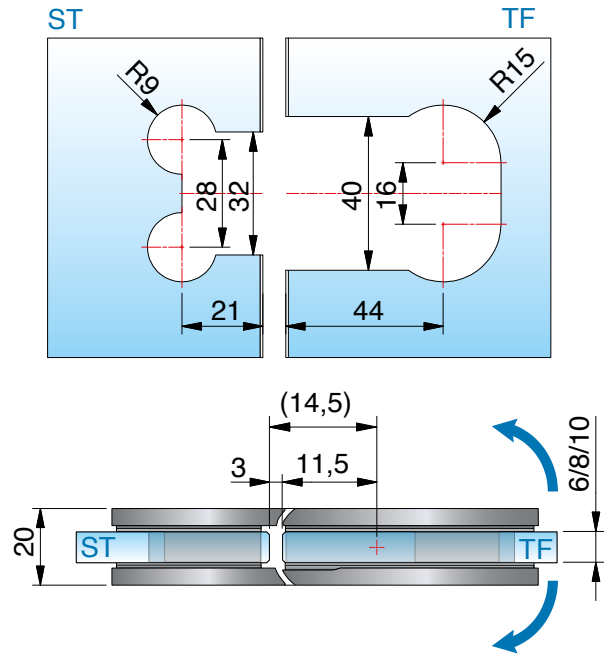

8182ZN glass-wall 90°

MADE IN GERMANY



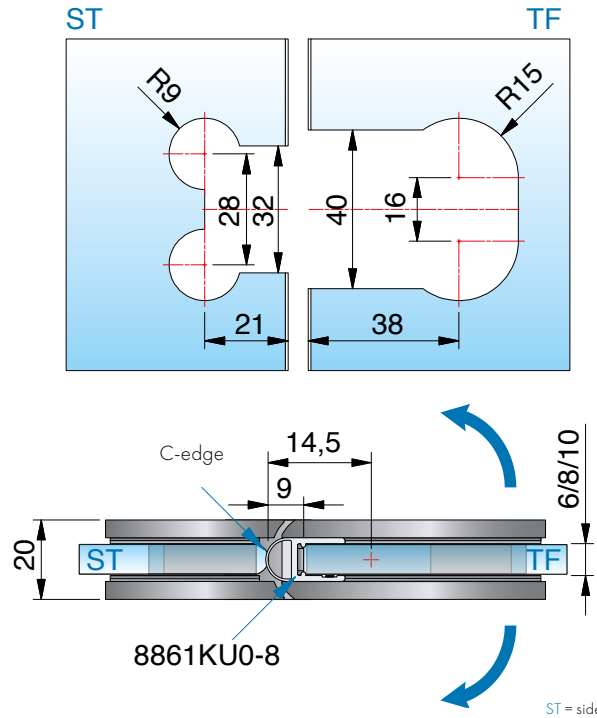

with seal profile 8861KU0-8-2010 (2500), *glass processing for 8 mm

ST = side panel I TF = door panel I W = wall



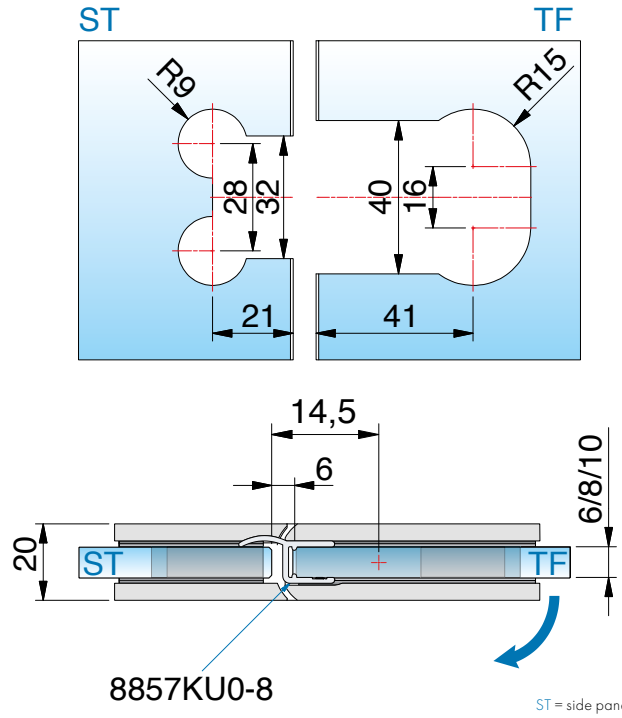

with seal profile 8857KU0-8-2010(2500), *glass processing for 8 mm

ST = side panel I TF = door panel I W = wall

available **surface colors**



ZN5
gloss chrome



ZN1
matt chrome



ZN135
deep black matt



ZNPVD39
gold bronze brushed



ZNPVD40
gold optic brushed

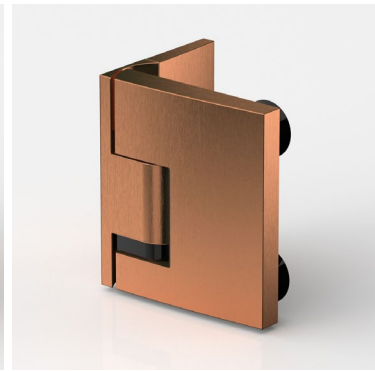

ZNPVD41
copper optic brushed



ZNPVD42
graphite metal optic brushed

compatibility chart for fittings manufacturer colors see page 14



corresponding **angle brackets**

for PAVONE can be found on page 200.

MADE
IN
GERMANY



PAVONE

flush lifting swing door hinge

Our service for you!

At **www.pauli.de**, you will find many different measurement sheets for all standard installation situations.





8390ZN135



8393ZN Glas-Glas 90°



8397ZN

option: mounting bracket facing outwards

PAVONE – highest demands on functionality and aesthetic

MADE IN GERMANY

With our new innovative developments in the lifting hinge area we give you the possibility, depending on the application, to build the shower without seals.

- 90° opens in- and outwards
- lifting function
- with flush screws
- self-closing during the lowering process
- fully adjustable closed position
- load capacity (2 hinges): 36 kg
  corresponds to a maximum door panel size of 900 x 2000mm with 8 mm glass thickness
- optimized for assembly without seals depending on the building situation (3mm gap to the wall with modified glass processing with mitered edge)
- the durability of the hardware has been tested internally according to DIN EN 14428:2015 5.5





8392ZN135



8399ZN135



- flush glass mounting for simpler cleaning
- lifting function - lifts 6 mm, after approx. 54°
- self-closing during the lowering process

- all hinges available also in black

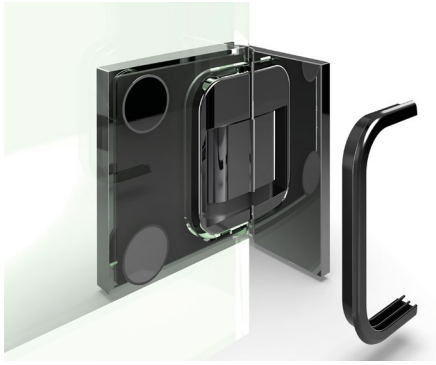

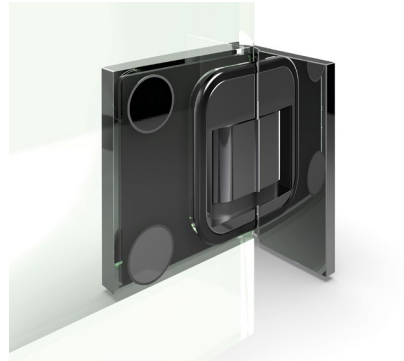

- for a smooth assembly process:
  insert the sealing gasket before aligning the panel.

Since the edge cutout of the glass remains visible largely due to the flushness of the surface, we recommend for the glass processing to use **CNC grinding**. this helps to avoid breakage i.e. over- and under breaking in the area of the edge cutout

Please note that the instruction manual can be found on page 382.

Attention: please take into account when planning!

MADE IN GERMANY









- Installation note:
  To ensure a permanently secure seal, we generally recommend the use of a lower splash guard for corner showers. When cutting sealing profiles in the corner area, it is not possible to achieve a reliable seal. We therefore advise against using only seal no. 8863KU0-8 and recommend a seal variant with a splash guard profile.

Attention: please take into account when planning!

MADE IN GERMANY

flush-mounted **fixing kits**





end cap, right-hand side
art no. 8587__-R

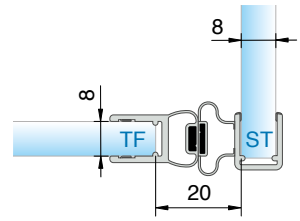

Art no.	lenght
8849KU0-8-2500	2500 mm

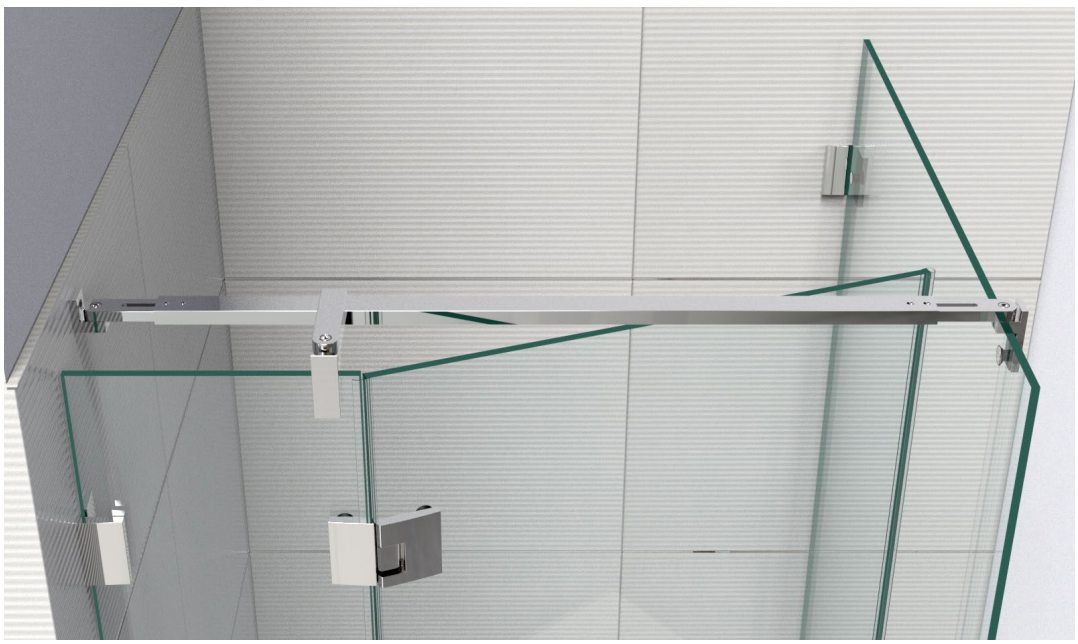



8471MS7
for 8474MS and 8475MS



8794ZN5-GF

8390ZN-L glass-wall 90°– mounted on the left

MADE IN GERMANY



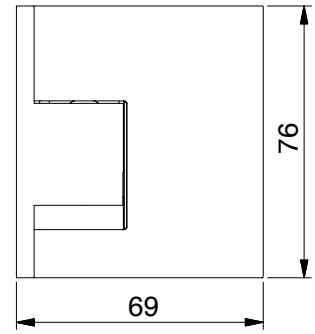

article no	glass thickness
8390__-L	8/10 mm

finish	
ZN5	gloss chrome
ZNPVD22	stainless steel optic
ZN135	depp black matt
ZNPVD39	gold bronze brushed
ZNPVD40	gold optic brushed
ZNPVD41	copper optic brushed
ZNPVD42	graphite metal optic brushed

features

mounted on the left, opening in- and outwards, glass fixtures flush, concealed screws with cover plate, point fixture assembly adjustable independent of each other ± 2 mm in any direction, closed position adjustable. assembly without side seal possible with altered glass processing

Attention: Please note the information on page 182 !

You can request the glass processing for 10 mm glass from our technical department.



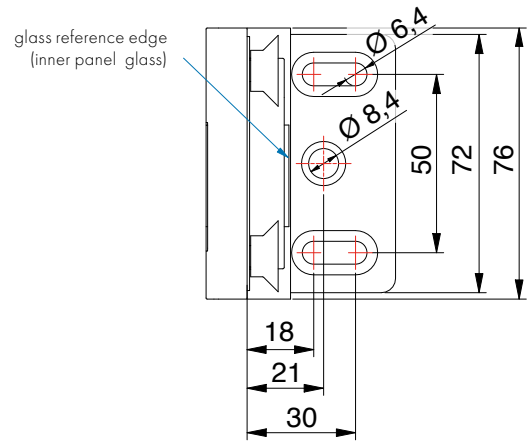

8390ZN-L glass-wall 90°– mounted on the left

MADE IN GERMANY

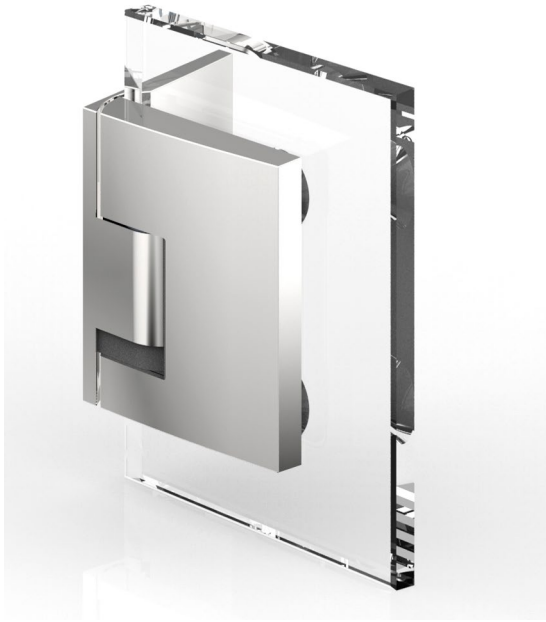

without sealing profile, for glass 8 mm

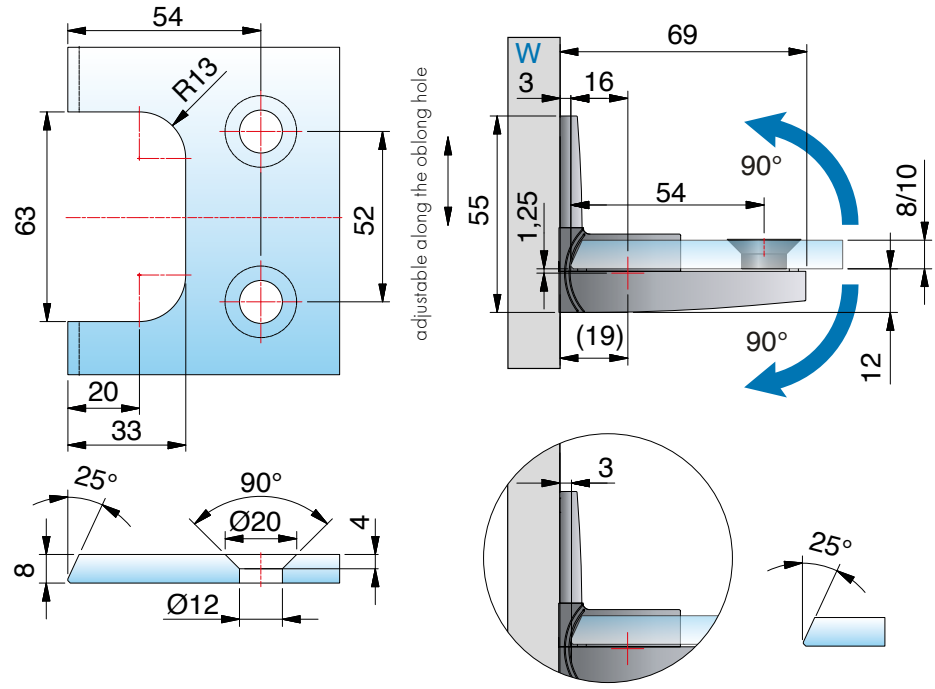

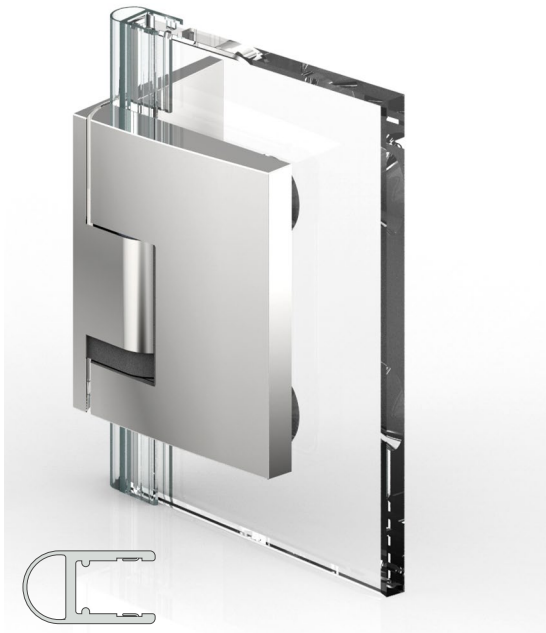

with sealing profile 8861KU0-8-2010(2500), for glass 8 mm

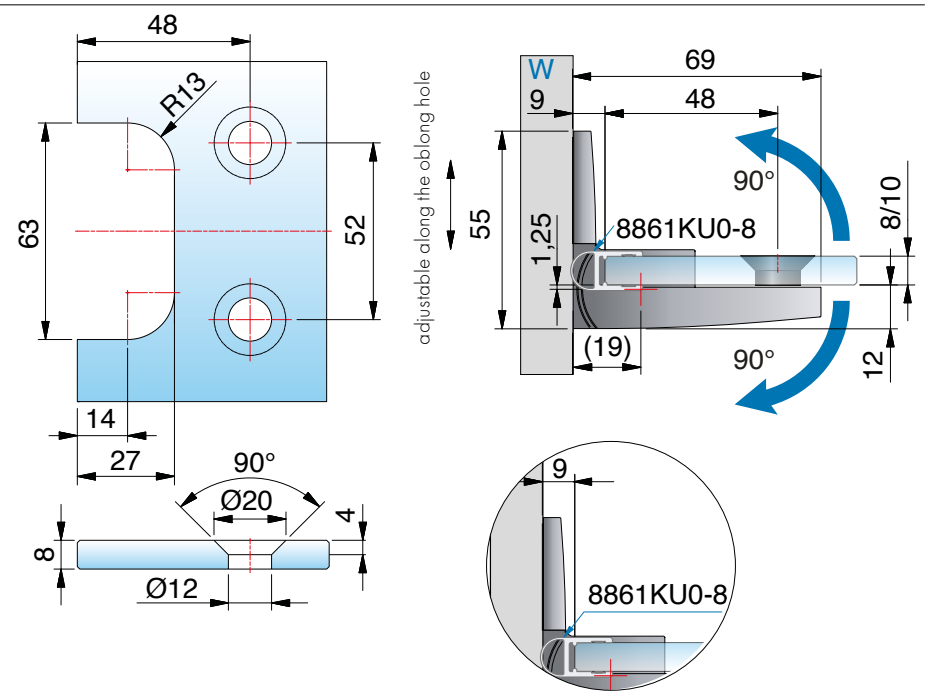

ST = side panel I TF = door panel I W = wall

8390ZN-R glass-wall 90°– mounted on the right

MADE IN GERMANY



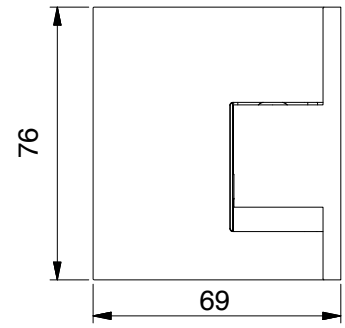

article no	glass thickness
8390__-R	8/10 mm

finish

	ZN5	gloss chrome
	ZNPVD22	stainless steel optic
	ZN135	depp black matt
	ZNPVD39	gold bronze brushed
	ZNPVD40	gold optic brushed
	ZNPVD41	copper optic brushed
	ZNPVD42	graphite metal optic brushed

features

mounted on the right, opening in- and outwards, glass fixtures flush, concealed screws with cover plate, point fixture assembly adjustable independent of each other ± 2 mm in any direction, closed position adjustable. assembly without side seal possible with altered glass processing

Attention: Please note the information on page 182 !
You can request the glass processing for 10 mm glass from our technical department.

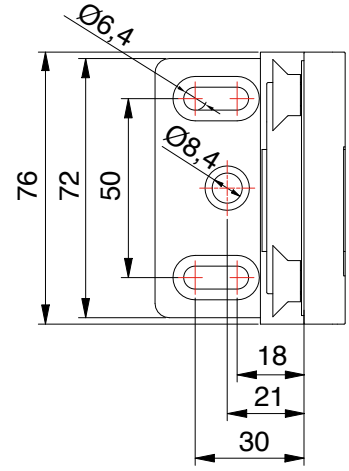



8390ZN-R glass-wall 90°– mounted on the right

MADE IN GERMANY



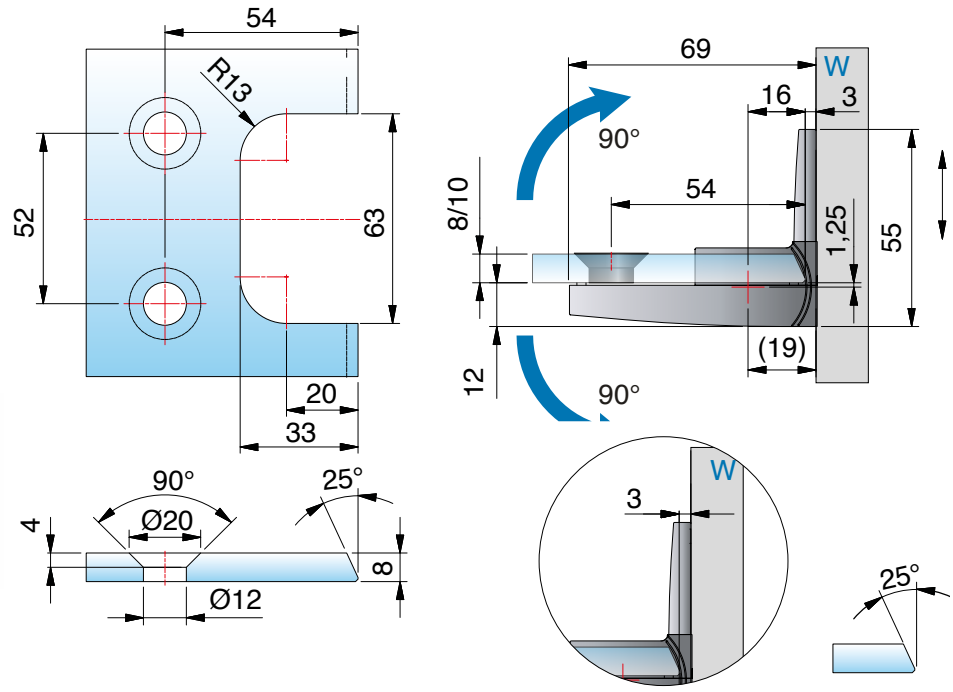

without sealing profile, for glass 8 mm

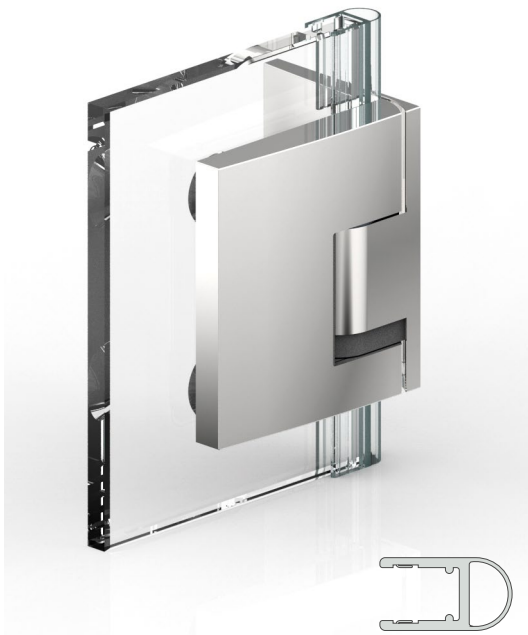

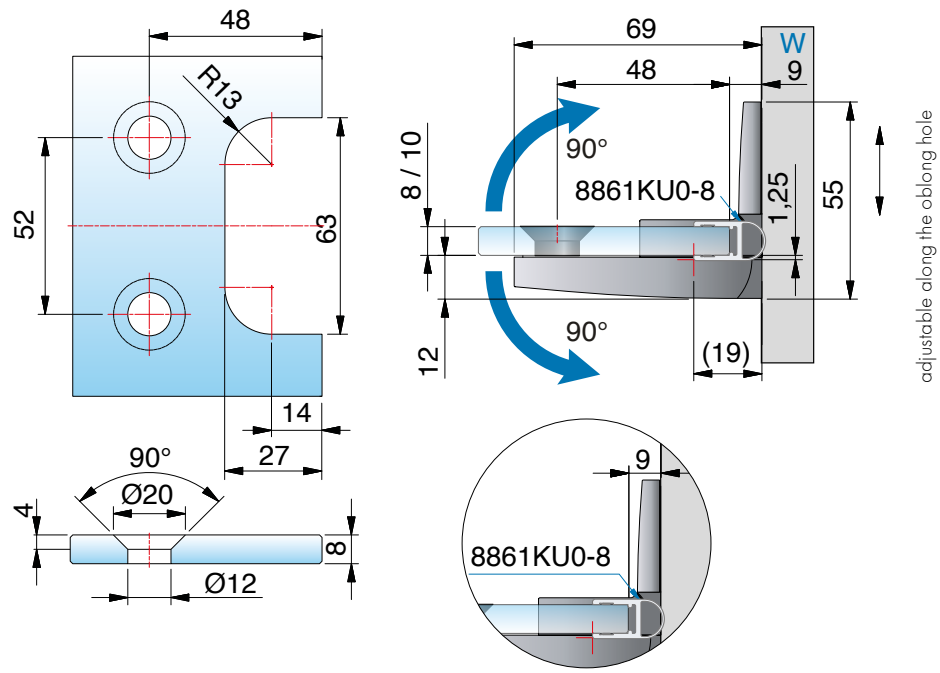

with sealing profile 8861KU0-8-2010(2500), for glass 8 mm

ST = side panel I TF = door panel I W = wall

adjustable along the oblong hole

8391ZN-L glass-wall 90°– mounted on the left

MADE IN GERMANY



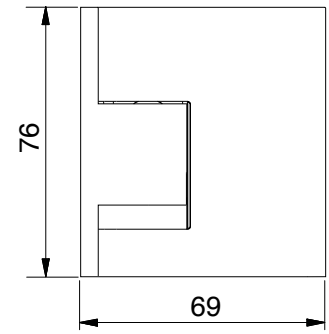

article no	glass thickness
8391__-L	8/10 mm

finish

	ZN5	gloss chrome
	ZNPVD22	stainless steel optic
	ZN135	depp black matt
	ZNPVD39	gold bronze brushed
	ZNPVD40	gold optic brushed
	ZNPVD41	copper optic brushed
	ZNPVD42	graphite metal optic brushed

features

mounted on the left, opening in- and outwards, glass fixtures flush, concealed screws with cover plate, point fixture assembly adjustable independent of each other ± 2 mm in any direction, closed position adjustable. assembly without side seal possible with altered glass processing

Attention: Please note the information on page 182 !
You can request the glass processing for 10 mm glass from our technical department.

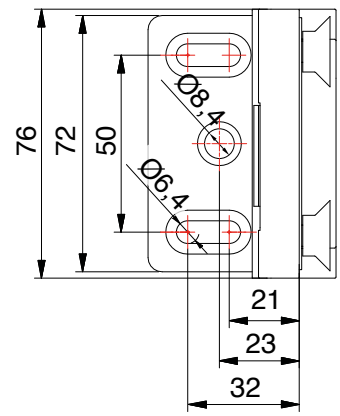



8391ZN-L glass-wall 90°– mounted on the left

MADE IN GERMANY



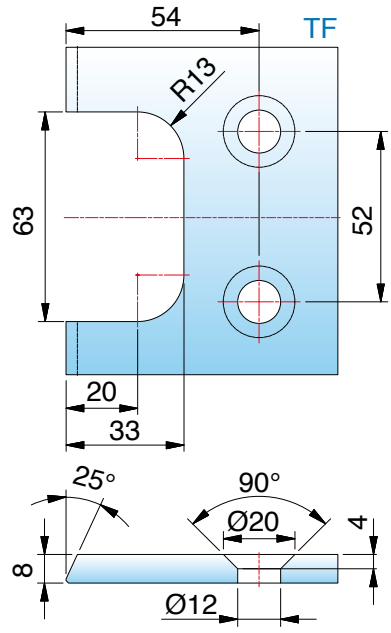

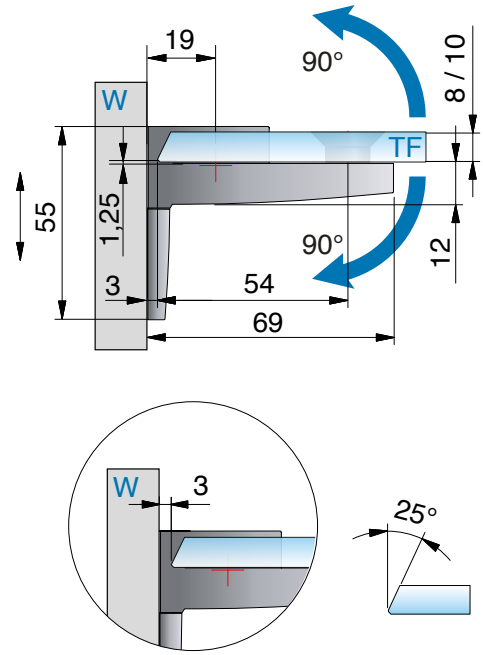

without sealing profile, for glass 8 mm

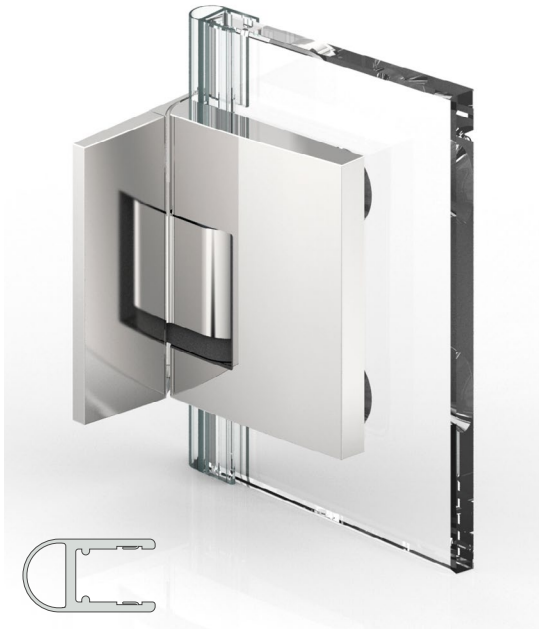

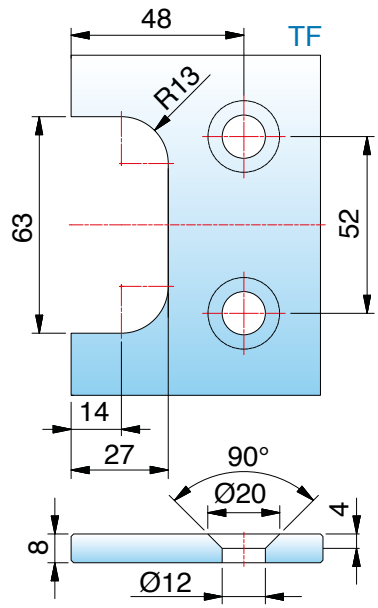

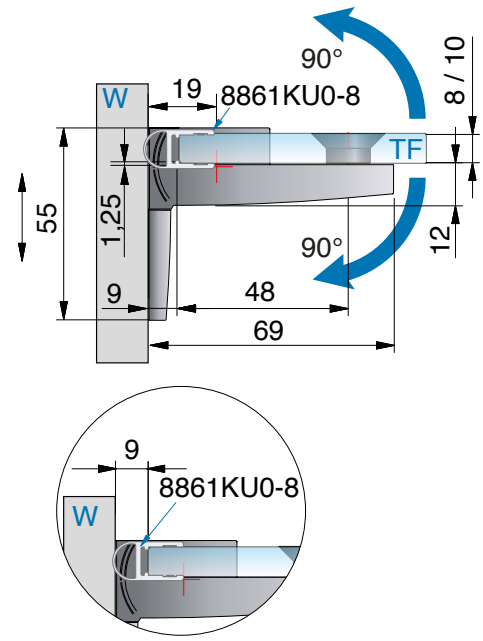

with sealing profile 8861KU0-8-2010(2500), for glass 8 mm

ST = side panel I TF = door panel I W = wall

8391ZN-R glass-wall 90°– mounted on the right

MADE IN GERMANY



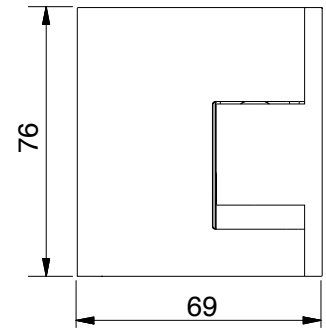

article no	glass thickness
8391__-R	8/10 mm

finish

	ZN5	gloss chrome
	ZNPVD22	stainless steel optic
	ZN135	depp black matt
	ZNPVD39	gold bronze brushed
	ZNPVD40	gold optic brushed
	ZNPVD41	copper optic brushed
	ZNPVD42	graphite metal optic brushed

features

mounted on the right., opening in- and outwards, glass fixtures flush, concealed screws with cover plate, point fixture assembly adjustable independent of each other ± 2 mm in any direction, closed position adjustable. assembly without side seal possible with altered glass processing

Attention: Please note the information on page 182 !
You can request the glass processing for 10 mm glass from our technical department.



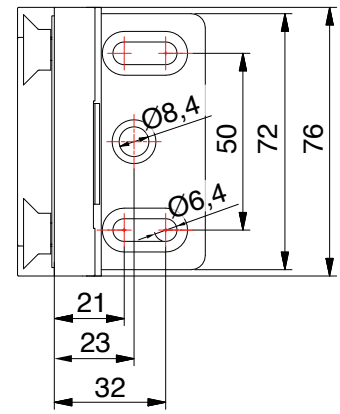

8391ZN-R glass-wall 90°– mounted on the right

MADE IN GERMANY

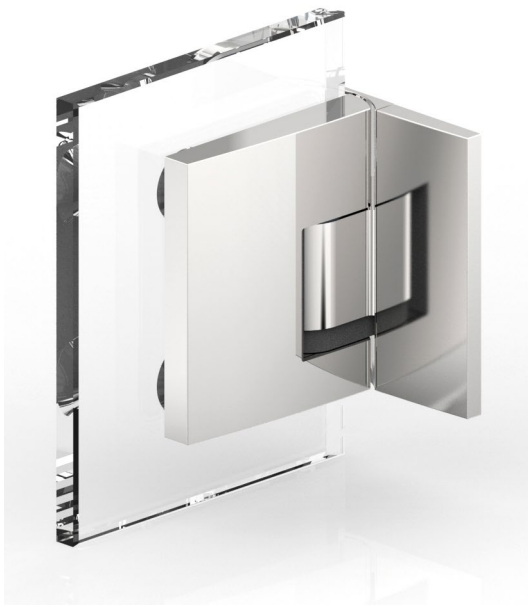

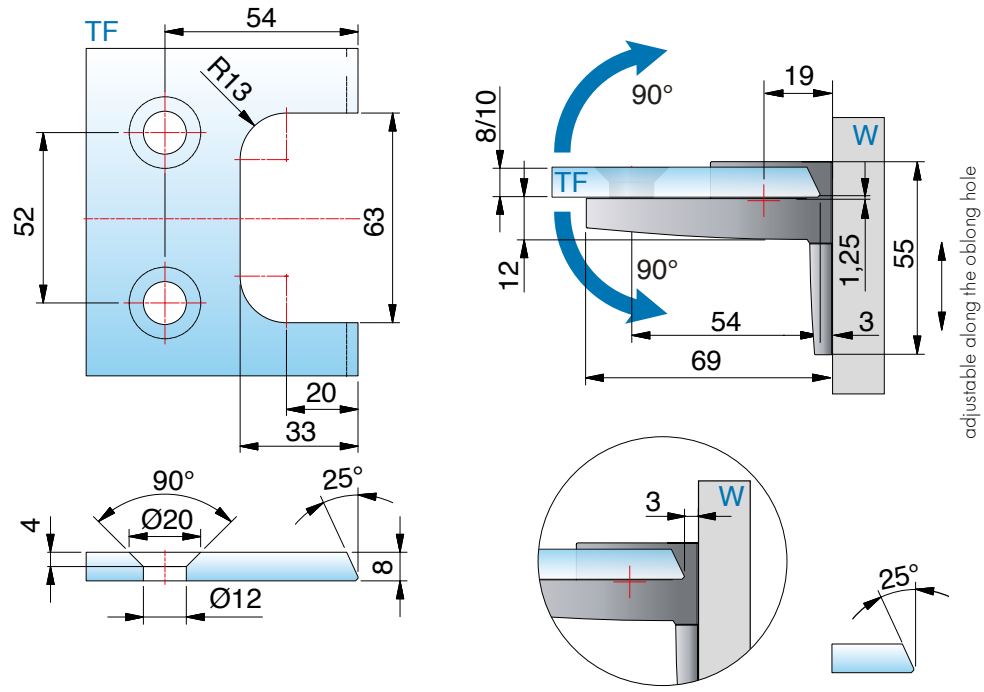

without sealing profile, for glass 8 mm

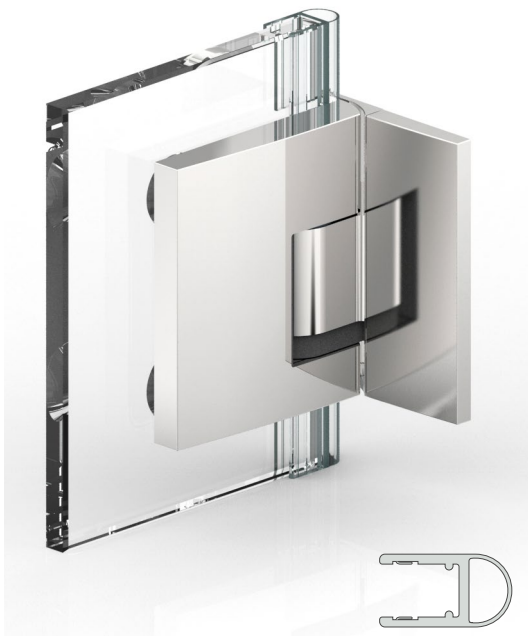

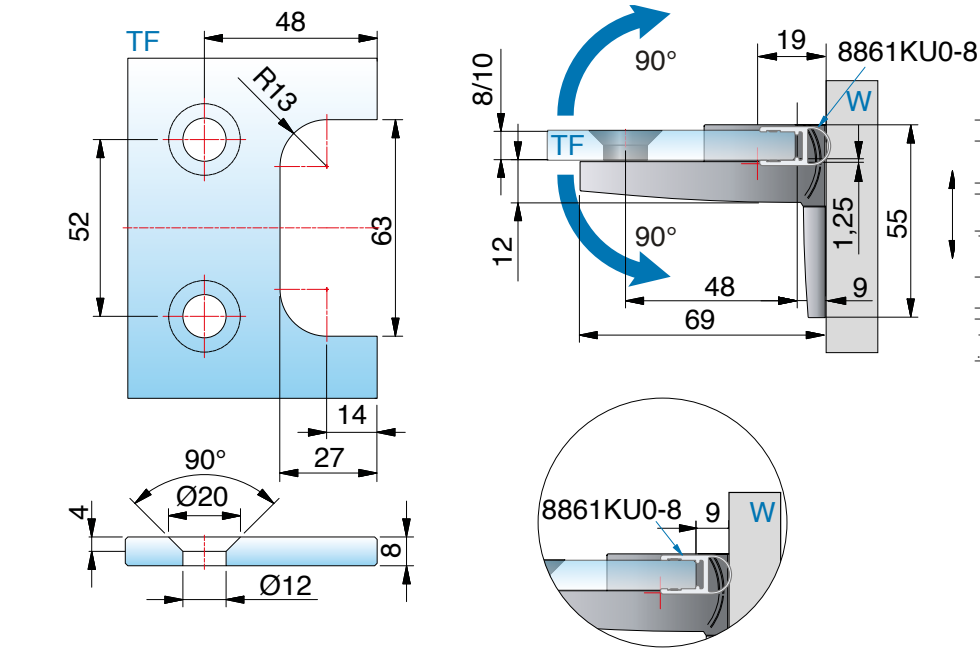

with sealing profile 8861KU0-8-2010(2500), for glass 8 mm

ST = side panel I TF = door panel I W = wall

8392ZN-L glass-glass 180°– mounted on the left

MADE IN GERMANY



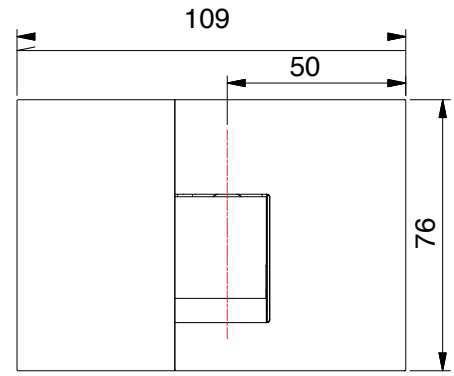

features

mounted on the left, opening in- and outwards, glass fixtures flush, point fixture assembly adjustable independent of each other ± 2 mm in any direction, closed position adjustable

Attention: Please note the information on page 182 !

You can request the glass processing for 10 mm glass from our technical department.

article no	glass thickness
8392__-L	8/10 mm

finish	
ZN5	gloss chrome
ZNPVD22	stainless steel optic
ZN135	depp black matt
ZNPVD39	gold bronze brushed
ZNPVD40	gold optic brushed
ZNPVD41	copper optic brushed
ZNPVD42	graphite metal optic brushed

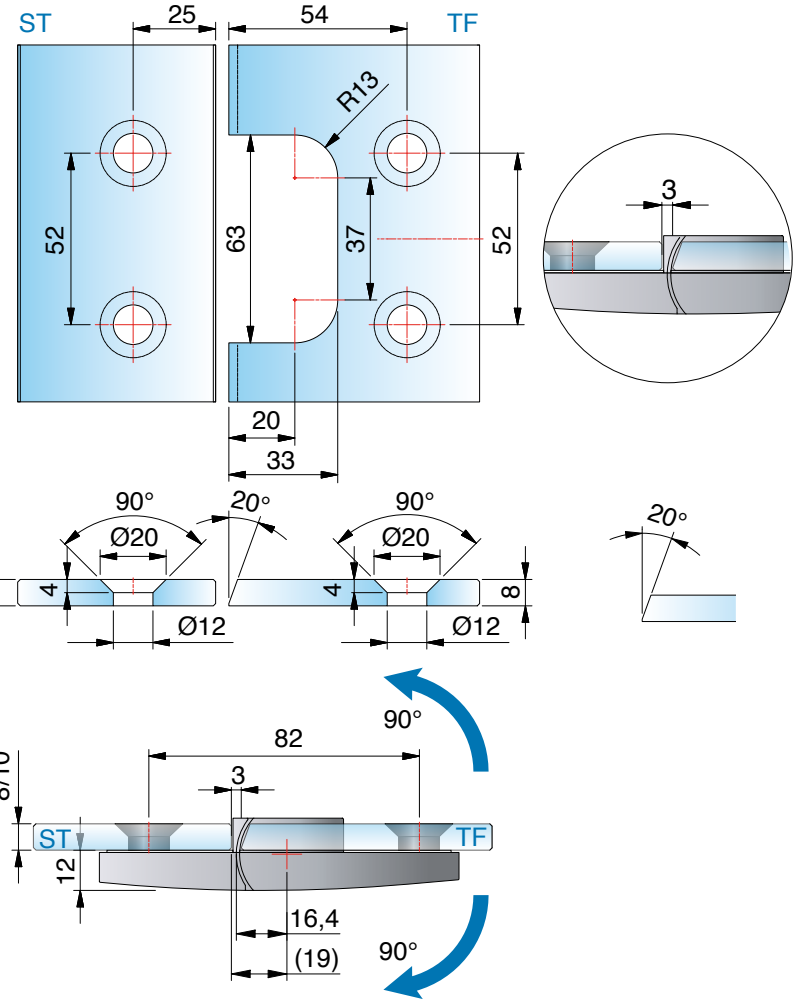

without sealing profile, for glass 8 mm

8392ZN-L glass-glass 180°– mounted on the left

MADE IN GERMANY



with sealing profile 8845KU0-8K-2500, for glass 8 mm

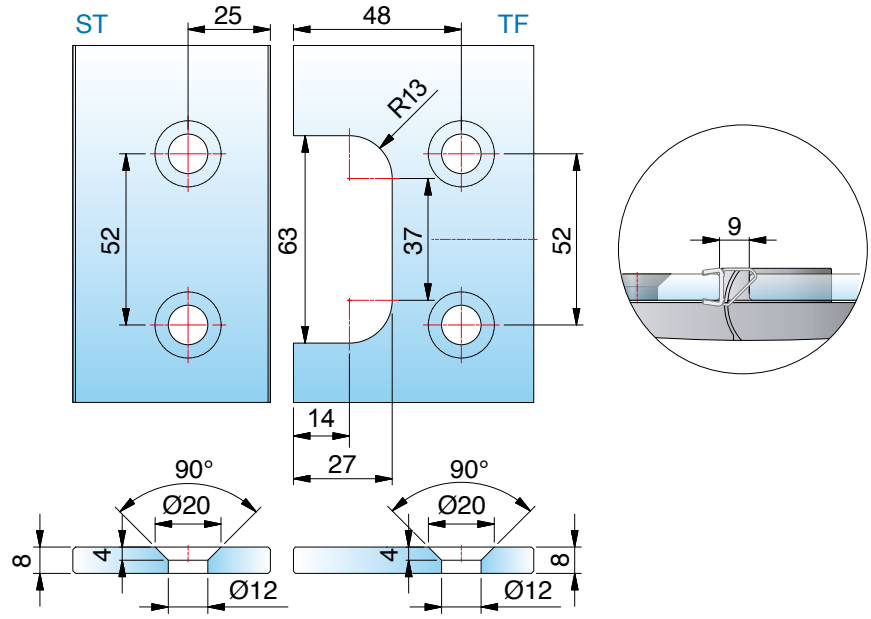

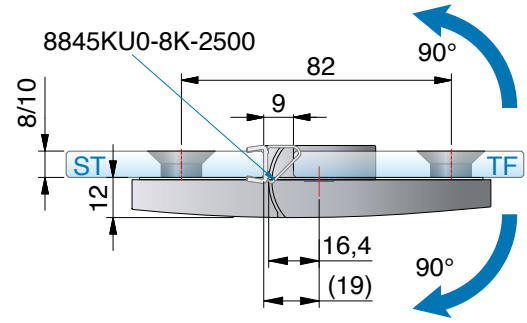

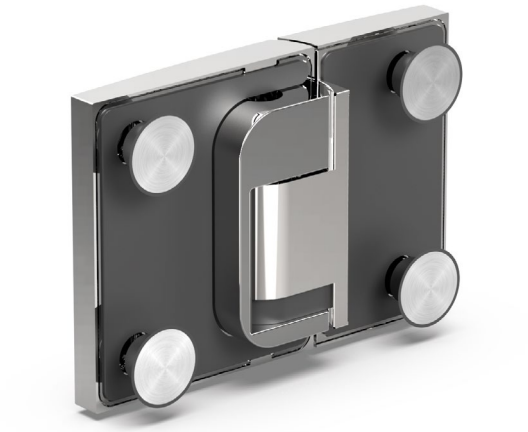

ST = side panel I TF = door panel I W = wall

8392ZN-R glass-glass 180°– mounted on the right

MADE IN GERMANY



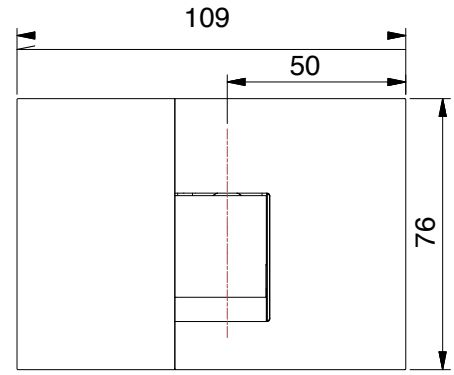

features

mounted on the right, opening in- and outwards, glass fixtures flush, point fixture assembly adjustable independent of each other ± 2 mm in any direction, closed position adjustable

Attention: Please note the information on page 182 !

You can request the glass processing for 10 mm glass from our technical department.

article no	glass thickness
8392__-R	8/10 mm

finish		
	ZN5	gloss chrome
	ZNPVD22	stainless steel optic
	ZN135	depp black matt
	ZNPVD39	gold bronze brushed
	ZNPVD40	gold optic brushed
	ZNPVD41	copper optic brushed
	ZNPVD42	graphite metal optic brushed

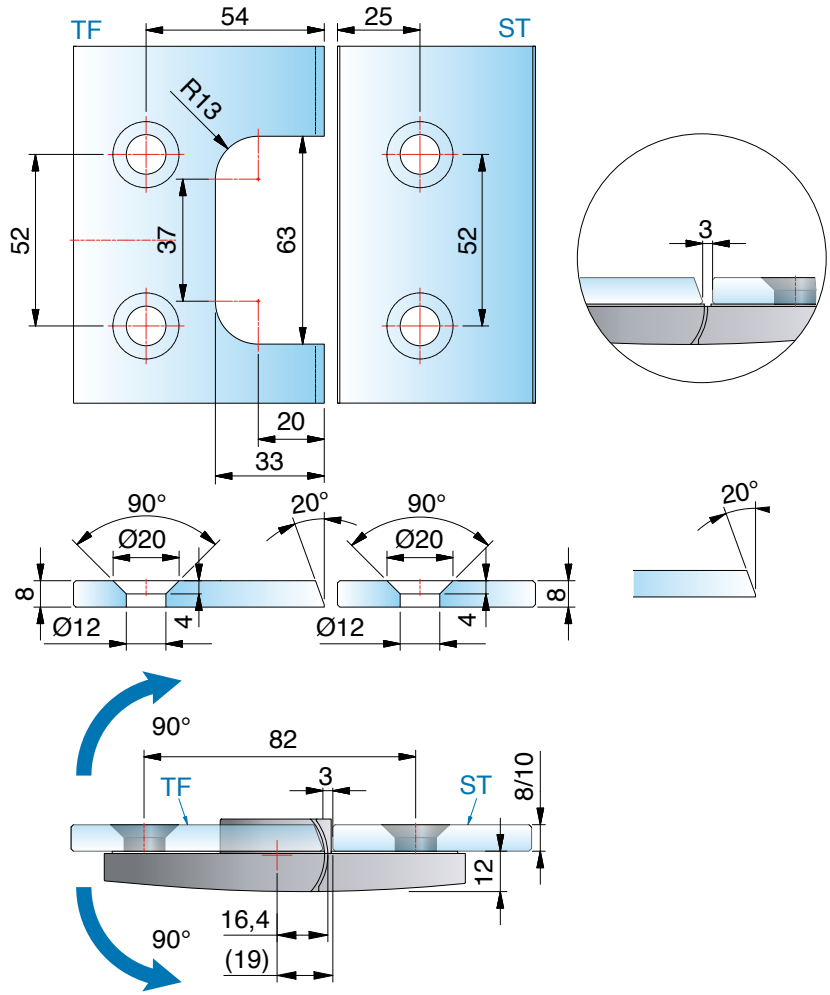

without sealing profile, for glass 8 mm

8392ZN-R glass-glass 180°– mounted on the right

MADE IN GERMANY



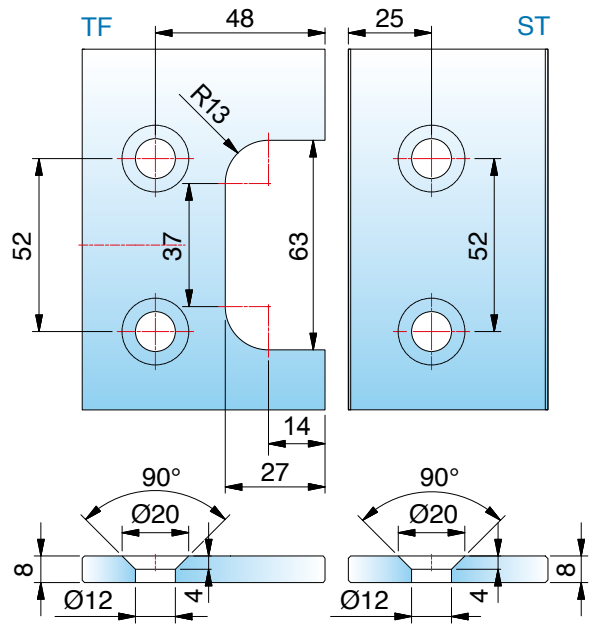

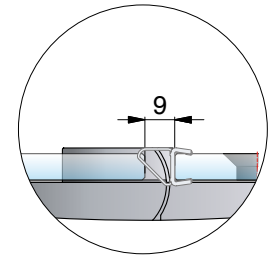

with sealing profile 8845KU0-8K-2500, for glass 8 mm

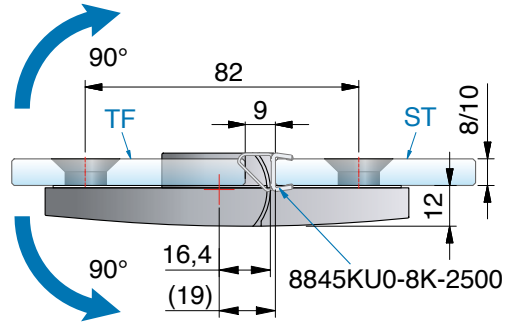

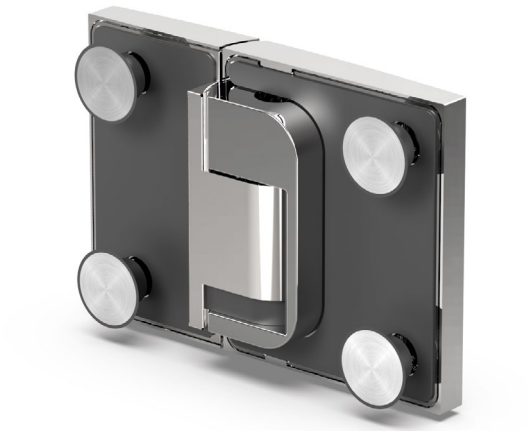

ST = side panel I TF = door panel I W = wall

8393ZN-L glass-glass 90°– mounted on the left

MADE IN GERMANY

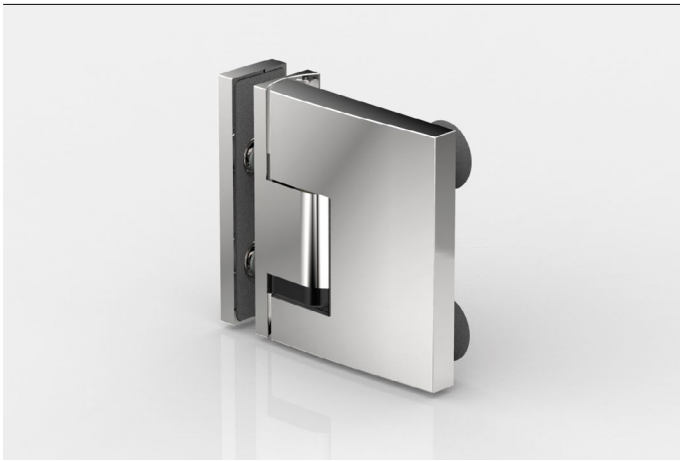

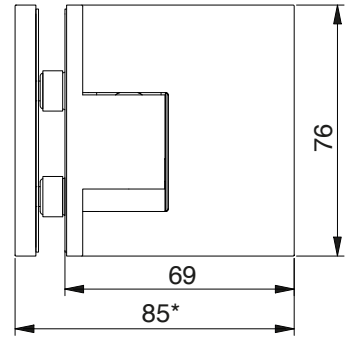

features

mounted on the left, opening in- and outwards, glass fixtures flush, point fixture assembly adjustable independent of each other ± 2 mm in any direction, closed position adjustable

Attention: Please note the information on page 182 !

You can request the glass processing for 10 mm glass from our technical department.



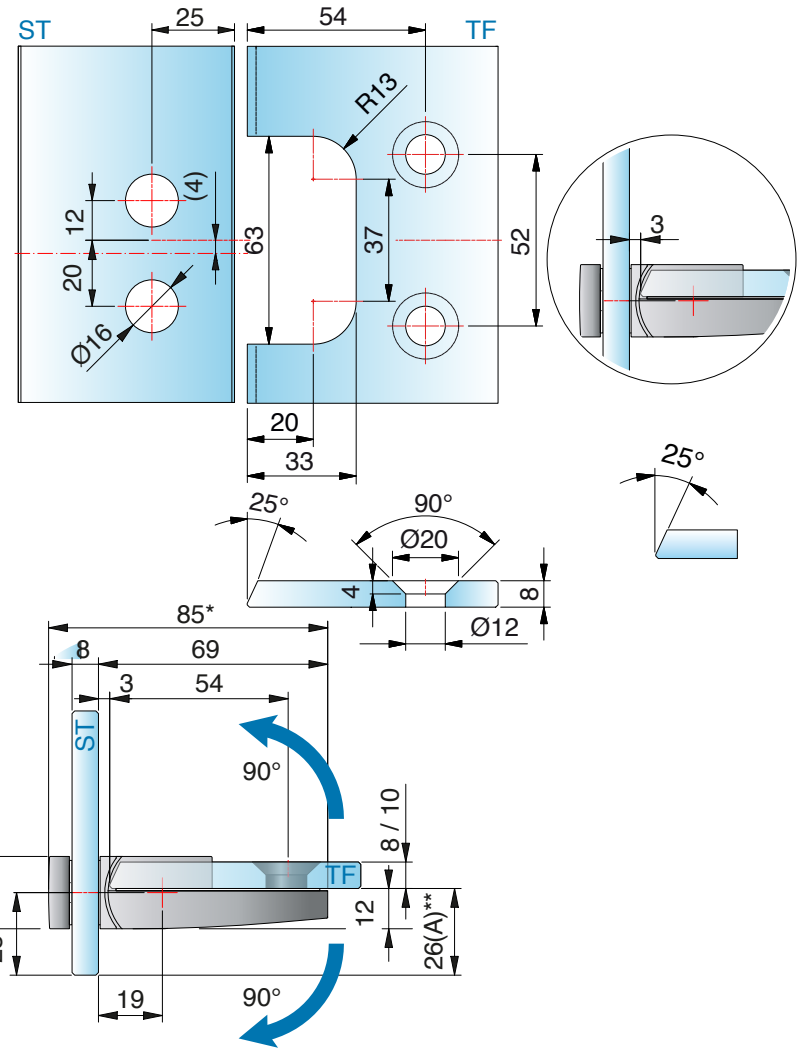



without sealing profile, for glass 8 mm

8393ZN-L glass-glass 90°– mounted on the left

MADE IN GERMANY



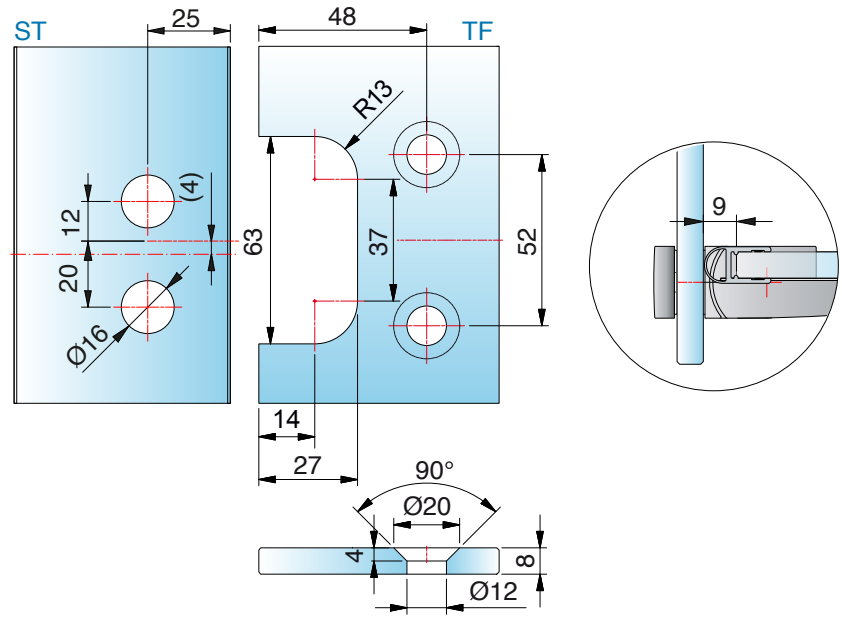

with sealing profile 8861KU0-8-2010(2500), for glass 8 mm



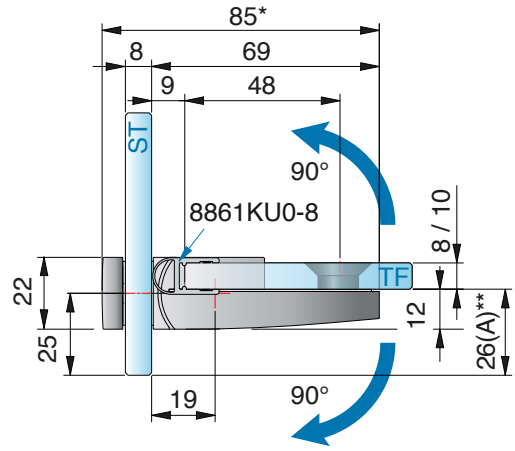

ST = side panel I TF = door panel I W = wall

8393ZN-R glass-glass 90°– mounted on the right

MADE IN GERMANY

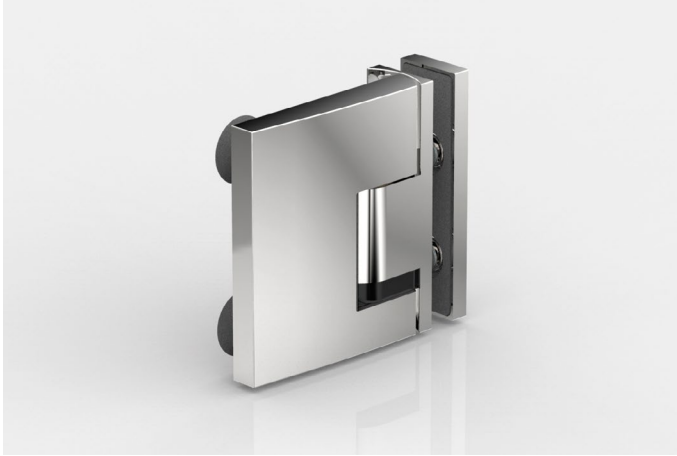

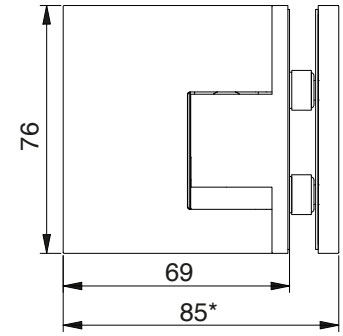

features

mounted on the right, opening in- and outwards, glass fixtures flush, point fixture assembly adjustable independent of each other ± 2 mm in any direction, closed position adjustable

Attention: Please note the information on page 182 !

You can request the glass processing for 10 mm glass from our technical department.

article no	glass thickness
8393__-R	8/10 mm

finish		
	ZN5	gloss chrome
	ZNPVD22	stainless steel optic
	ZN135	depp black matt
	ZNPVD39	gold bronze brushed
	ZNPVD40	gold optic brushed
	ZNPVD41	copper optic brushed
	ZNPVD42	graphite metal optic brushed

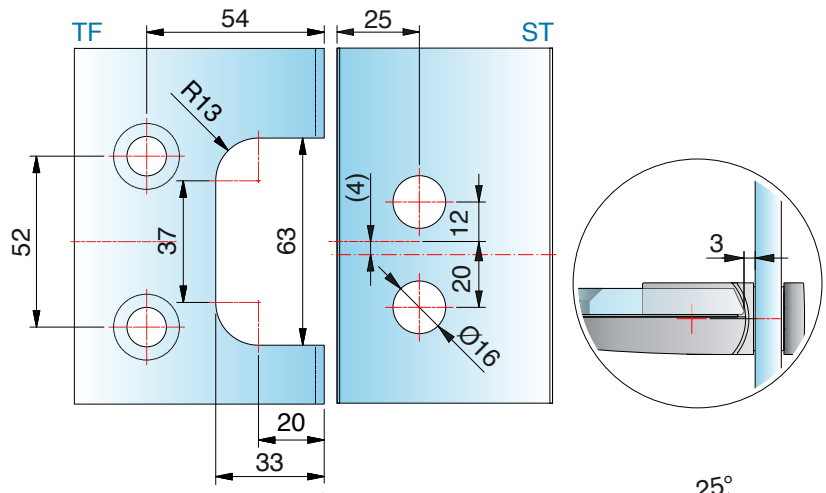

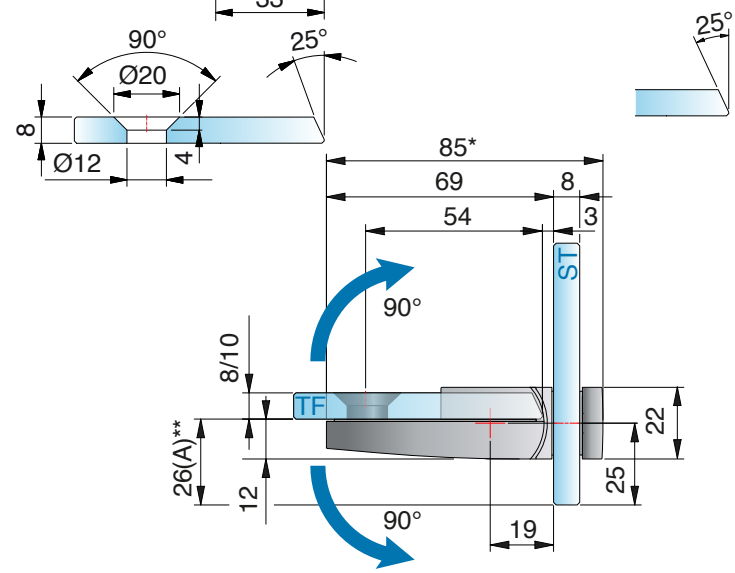

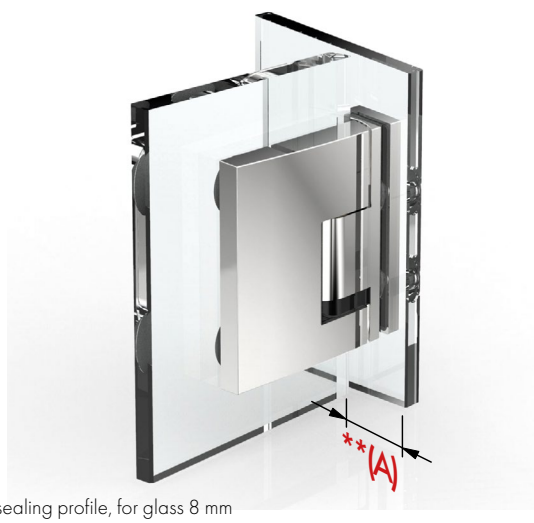

without sealing profile, for glass 8 mm

8393ZN-R glass-glass 90°– mounted on the right

MADE IN GERMANY



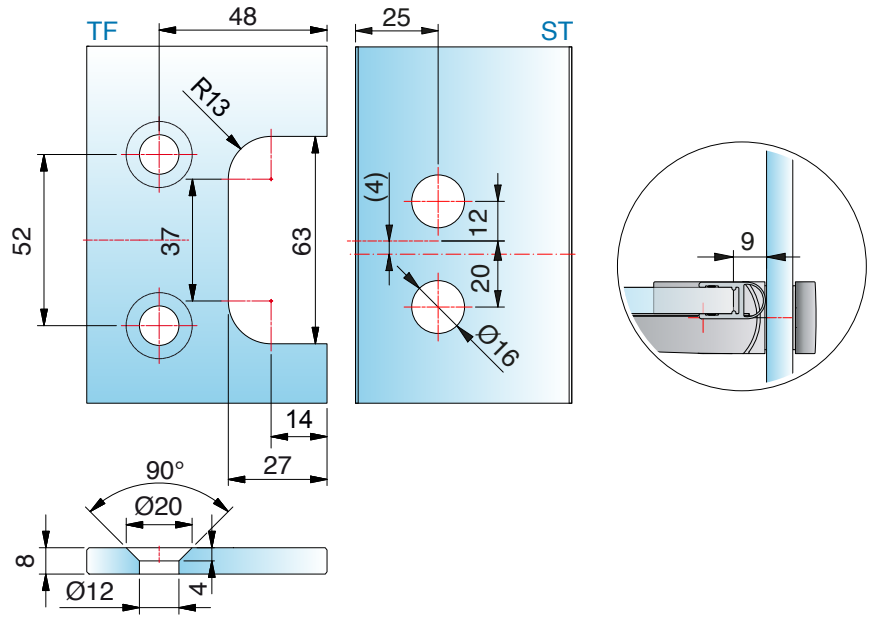

with sealing profile 8861KU0-8-2010(2500), for glass 8 mm



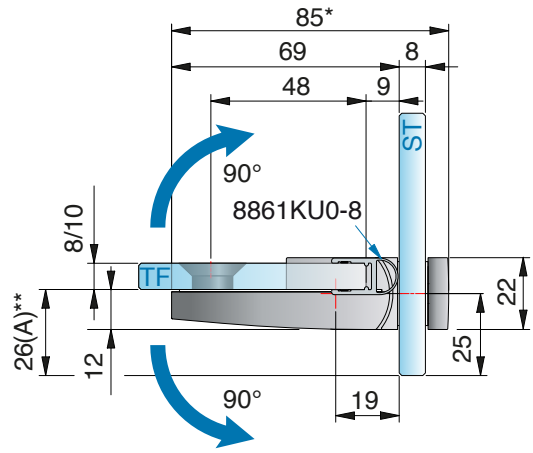

ST = side panel I TF = door panel I W = wall

8398ZN glass-wall 90°

MADE IN GERMANY



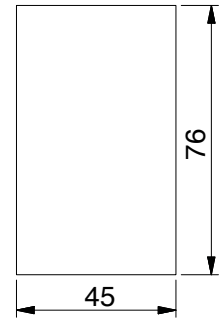

features; glass mount flush, bracket inside with oblong adjustment, cover plate, point fixtures adjustable ± 2mm in any direction

article no	glass thickness
8398__	8/10 mm



finish	
ZN5	gloss chrome
ZNPVD22	stainless steel optic
ZN135	depp black matt
ZNPVD39	gold bronze brushed
ZNPVD40	gold optic brushed
ZNPVD41	copper optic brushed
ZNPVD42	graphite metal optic brushed

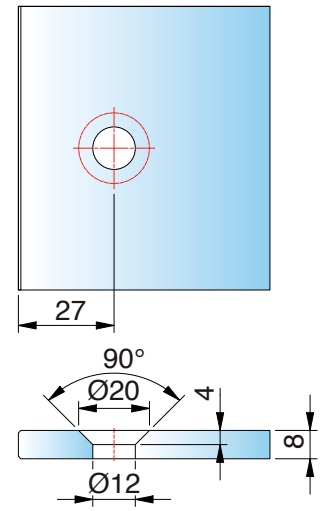

glass processing for 8/10 mm

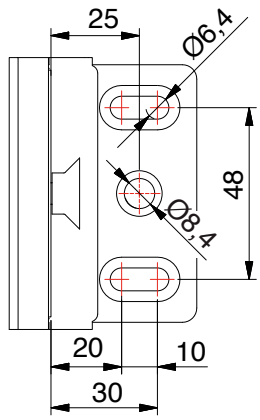

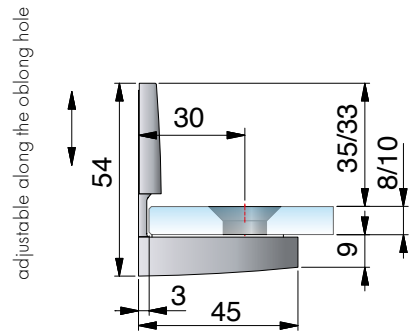

ST = side panel I TF = door panel I W = wall



8397ZN glass-wall 90°

MADE IN GERMANY

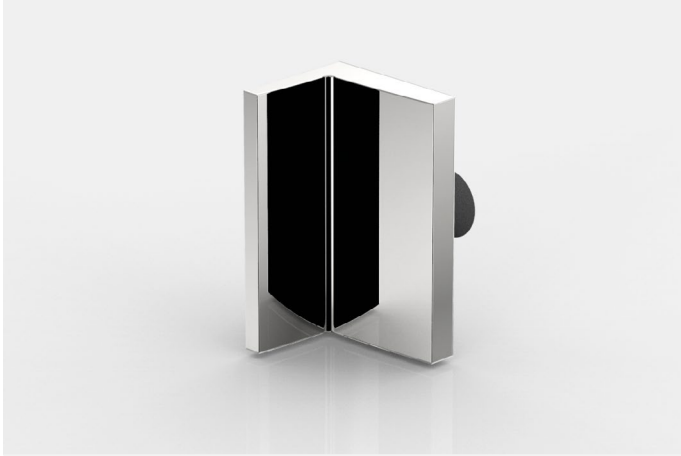

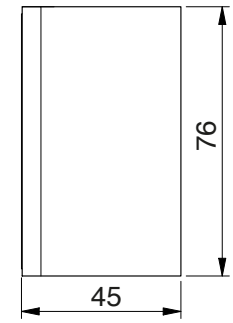

features: glass mount flush, bracket outside with oblong adjustment, cover plate, point fixtures adjustable ± 2mm in any direction

article no	glass thickness
8397__	8/10 mm



finish	
ZN5	gloss chrome
ZNPVD22	stainless steel optic
ZN135	depp black matt
ZNPVD39	gold bronze brushed
ZNPVD40	gold optic brushed
ZNPVD41	copper optic brushed
ZNPVD42	graphite metal optic brushed

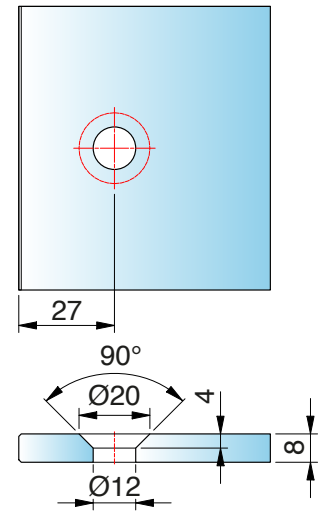

glass processing for 8/10 mm

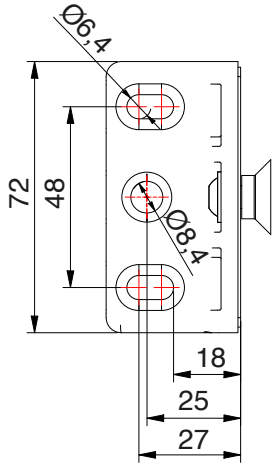

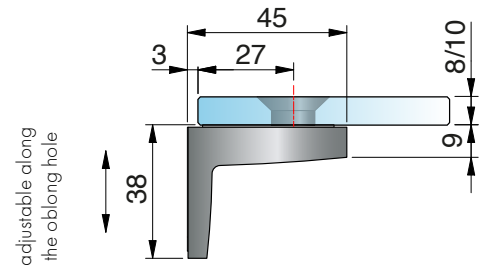

ST = side panel I TF = door panel I W = wall

8399ZN glass-glass 90°

MADE IN GERMANY



article no	glass thickness
8399__	8/10 mm

finish		
	ZN5	gloss chrome
	ZNPVD22	stainless steel optic
	ZN135	depp black matt
	ZNPVD39	gold bronze brushed
	ZNPVD40	gold optic brushed
	ZNPVD41	copper optic brushed
	ZNPVD42	graphite metal optic brushed

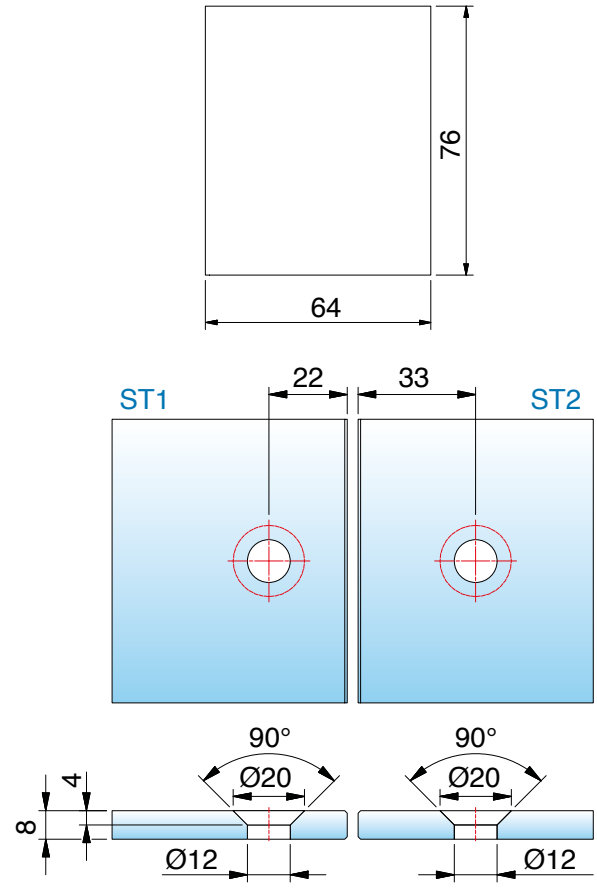

features: glass mount flush, cover plate, point fixtures adjustable ± 2mm in any direction

glass processing for 8/10 mm

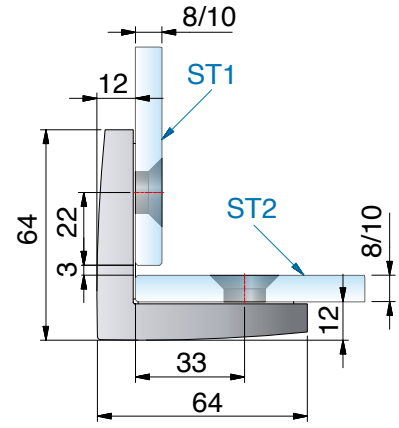

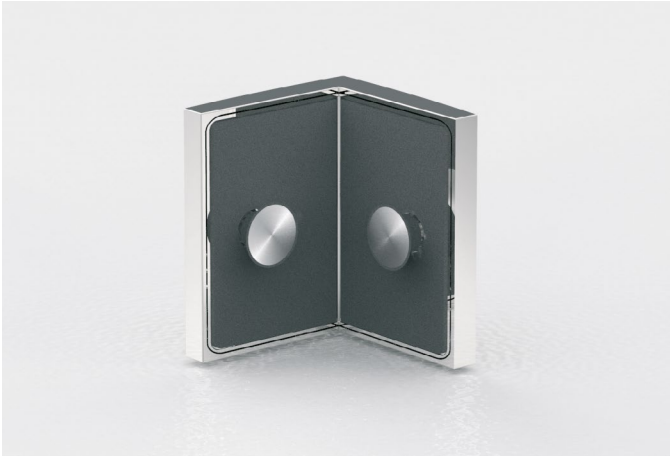

ST = side panel I TF = door panel I W = wall

available **surface finishes**



ZN5
gloss chrome



ZN1
matt chrome



ZNPVD22
stainless steel optic



ZNPVD35
matt black



ZN135
matt deep black

You can find a compatibility chart for faucet manufacturers and their colors on page 14





suitable **angle brackets**

for TURA can be found on page 246.

MADE
IN
GERMANY



TURA pro

Heavy-Duty Swing Door Hinge



TURA pro - Design spacious showers

MADE IN GERMANY

Modern bathrooms and spacious loft-style designs call for a sense of openness, elegance, and uncompromising quality. Large, heavy glass panels and floor-to-ceiling designs, in particular, often present planners and craftsmen with structural and installation challenges.

With the **TURA pro swing door hinge**, these hurdles are athing of the past. We have developed a hardware system that combines maximum load-bearing capacity with easy adjustability—for impressive showers of the highest caliber.

- Load capacity (2 hinges): 70 kg Max. door panel width: 1200 mm Max. door panel height: 2700 mm
  Max. opening angle of the hinge in both directions: 95°
- Swing door hinge: Glass–Wall / Glass–Glass
- Matching angle brackets
- Infinitely adjustable and concealed closed-position adjustment
- Hinge height: 122 mm
- Seal profile discontinued in the hinge area
  Self-closing from 55°
- Durability of the hardware tested through in-house tests in accordance withDIN EN 14428:2015/A1:2018 5.5 and TR24

Design

MADE IN GERMANY



Closed-Position Adjustment

An innovative, force-locking system for infinitely variableclosed-position adjustment that allows for repeated adjustmentswithout causing mechanical damage.



8950ZN



8952ZN



8954ZN



8956ZN

Angle brackets and more

MADE IN GERMANY


8950ZN


8952ZN


8954ZN


8956ZN

Easy-to-Install cover caps

To secure the cover caps, they can be quickly and easily inserted into the pre-assembled EPDM molded parts using the pins and pressed into place. To protect the caps from theft, adhesive pads are still provided to secure them. The cover caps conceal all mounting elements for easy maintenance and cleaning.

- Maximum opening anglein both directions of max. 95°
- Self-closing starting at 55°

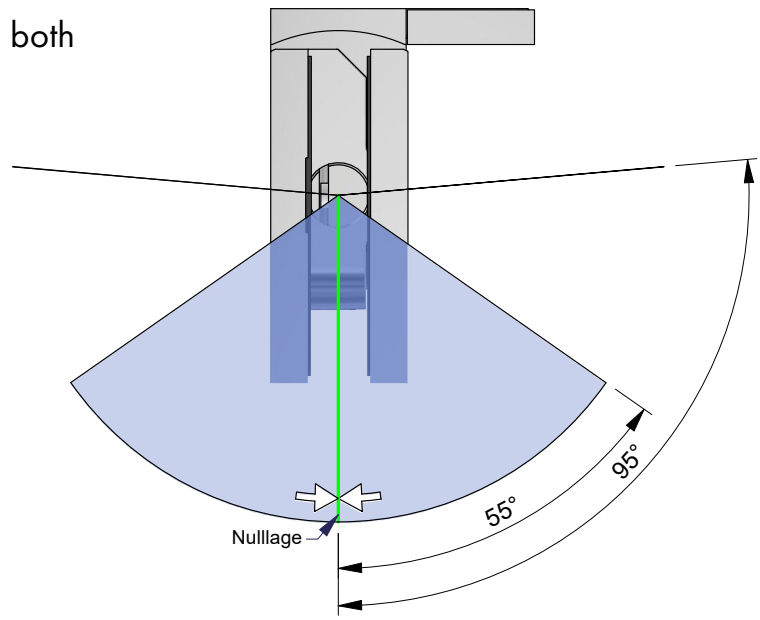

Overhang

MADE IN GERMANY





With the 90° glass-to-glass hinge, only holes in the side panel are required, this allows the glass door panel to be set back inward, and the overhang (A) can be determined as desired.

8950ZN Glass - Wall 90°

MADE IN GERMANY



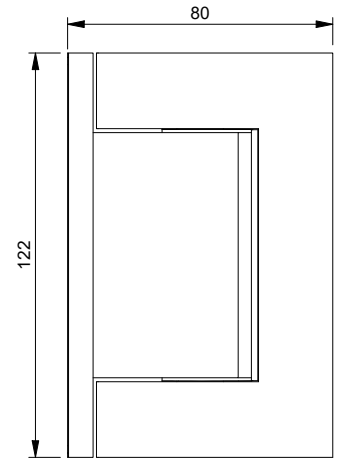

article no.	glass thickness
8950__	8/10*/12* mm

finish	
ZN5	gloss chrome
ZN1	matt chrome
ZNPVD22	stainless steel optic
ZNPVD35	black matt
ZN135	deep blackmatt

Features
Opens up to 95° in both directions, single-sided mounting bracket, infinitely adjustable closed-position setting, self-closing from 55°, adjustment along the oblong hole with cover cap, load capacity (2 hinges) 70 kg (max. door panel width 1200 mm)

***Important**
Designed for 8 mm glass; inlays for 10 mm are included. When using these hardware sets, please order the following spacer set free of charge for each set:
for 12 mm glass thickness, Item No. HZ-SET26
You can request glass processing specifications for 10 or 12 mm glass from our technical department.

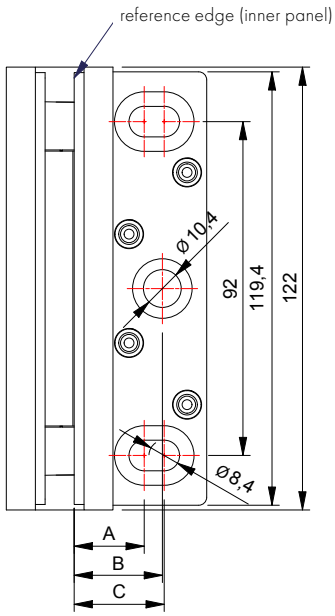

variable	8 mm glass	10 mm glass	12 mm glass
A	19,7	18,7	17,7
B	24,7	23,7	22,7
C	25,5	24,5	23,5

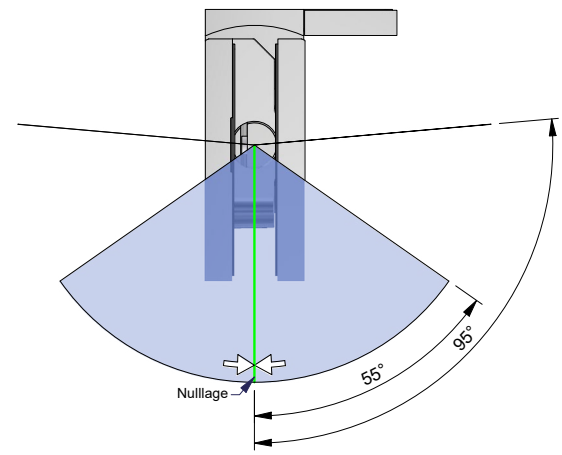

8950ZN Glass - Wall 90°

MADE IN GERMANY



without seal profile, glass processing for 8 mm

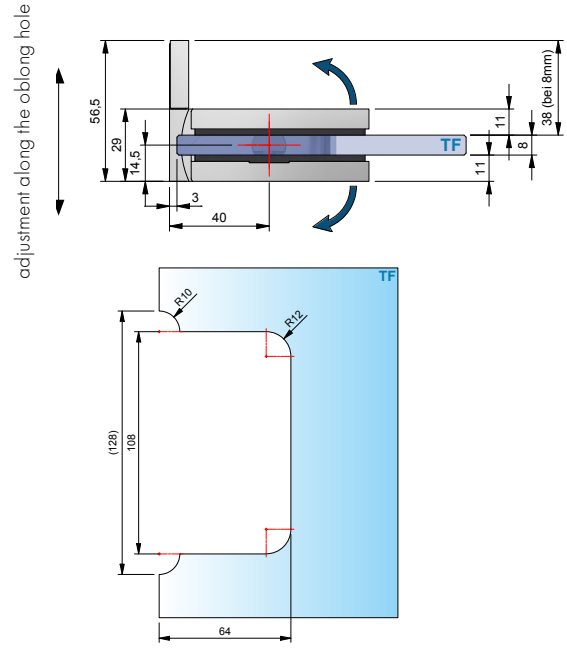



with seal profile 8861KU0-8-2010 (2500), glass processing for 8 mm

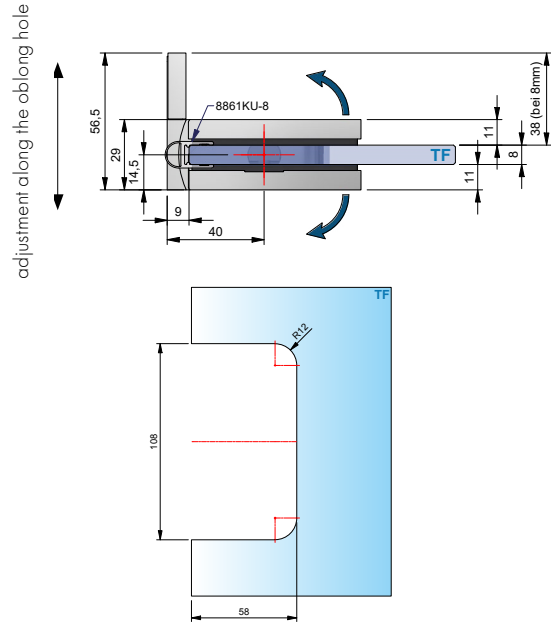

ST = Side panel
TF = Door panel
W = Wall

8956ZN Glass-Wall 90°

MADE IN GERMANY



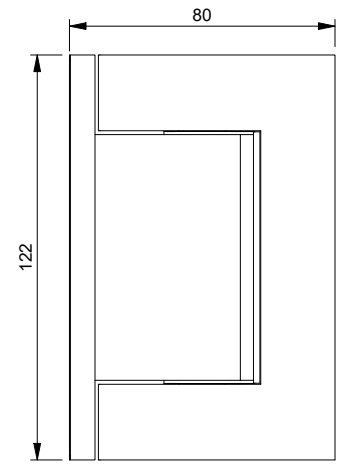

article no.	glass thickness
8956__	8/10*/12* mm

finish	
ZN5	gloss chrome
ZN1	matt chrome
ZNPVD22	stainless steel optic
ZNPVD35	black matt
ZN135	deep blackmatt

Features

Opens up to 95° in both directions, single-sided mounting bracket, infinitely adjustable closed-position setting, self-closing from 55°, adjustment along the oblong hole with cover cap, load capacity (2 hinges) 70 kg (max. door panel width 1200 mm)

***Important**

Designed for 8 mm glass; inlays for 10 mm are included. When using these hardware sets, please order the following spacer set free of charge for each set:

for 12 mm glass thickness, Item No. HZ-SET26

You can request glass processing specifications for 10 or 12 mm glass from our technical department.

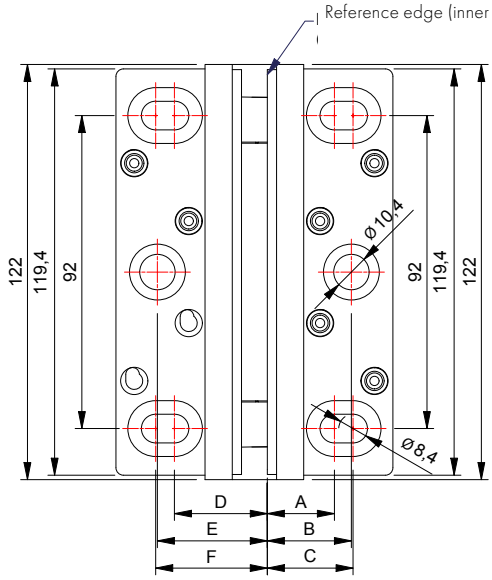

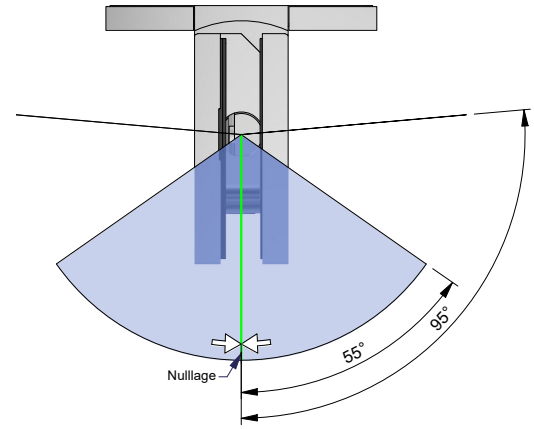

Variabel	8 mm Glass	10 mm Glass	12 mm Glass	Variabel	8 mm Glass	10 mm Glass	12 mm Glass
A	19,7	18,7	17,7	D	27,3	28,3	29,3
B	24,7	23,7	22,7	E	32,3	33,3	34,3
C	25,5	24,5	23,5	F	32,8	33,8	34,8

8956ZN Glass-Wall 90°

MADE IN GERMANY



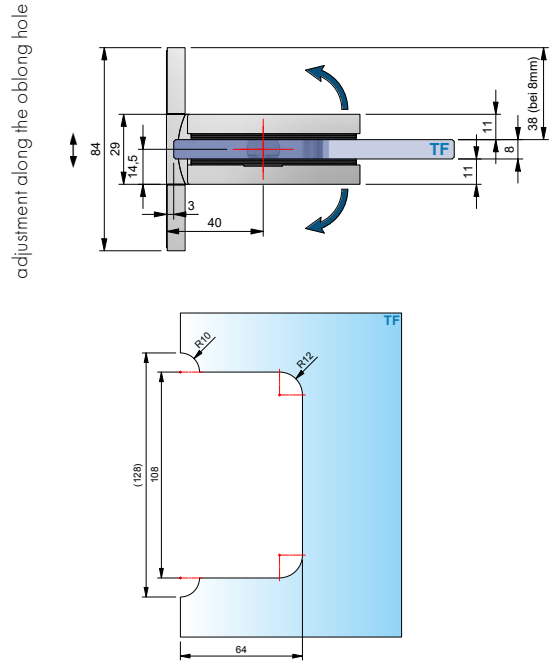



with seal profile 8861KU0-8-2010 (2500), glass processing for 8 mm

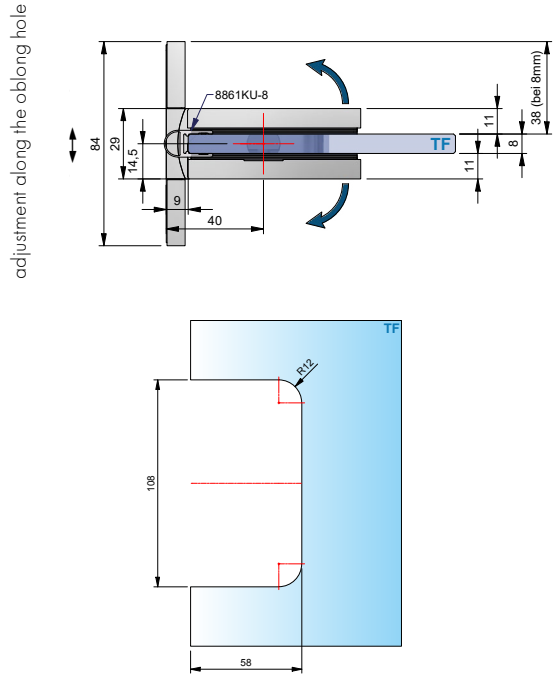

ST = Side panel
TF = Door panel
W = Wall

TURA PRO

8952ZN Glass-Glass 180°

MADE IN GERMANY



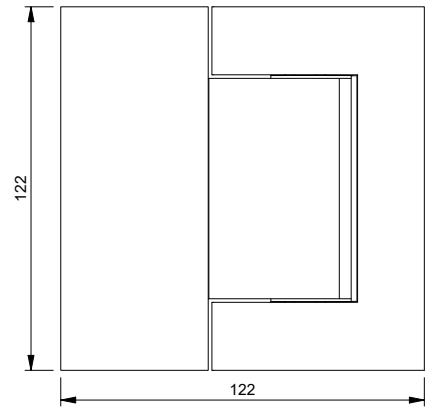

article no.	glass thickness
8952__	8/10*/12* mm

finish	
ZN5	gloss chrome
ZN1	matt chrome
ZNPVD22	stainless steel optic
ZNPVD35	black matt
ZN135	deep blackmatt

Features
Opens up to 95° in both directions, infinitely adjustable closed-position setting, self-closing at 55°, load capacity (2 hinges) 70 kg (max. door panel width 1200 mm)

***Important**
Designed for 8 mm glass; inserts for 10 mm are included. When using the hardware, please order the following insert set free of charge for each piece of hardware: for **12 mm glass thickness, Item No. HZ-SET27**
You can request glass processing specifications for 10 or 12 mm glass from our technical department

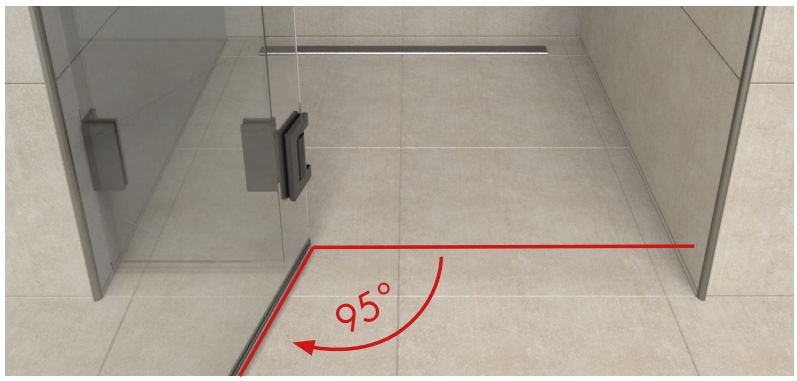

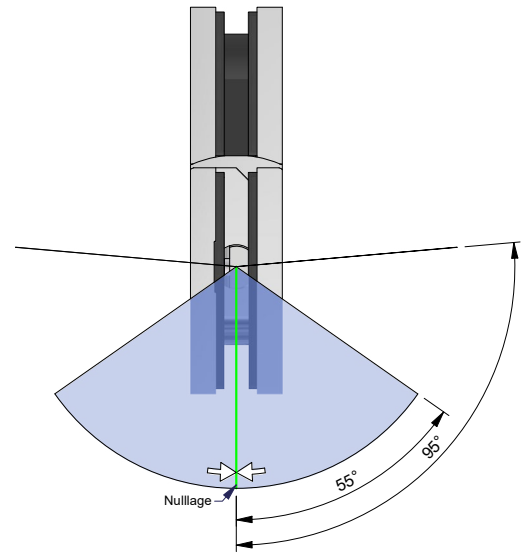

8952ZN Glass-Glass 180°

MADE IN GERMANY



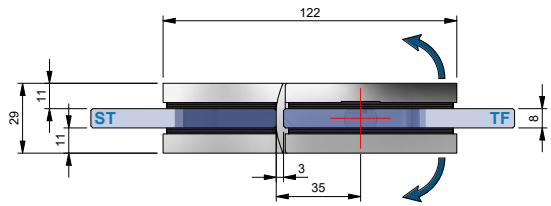

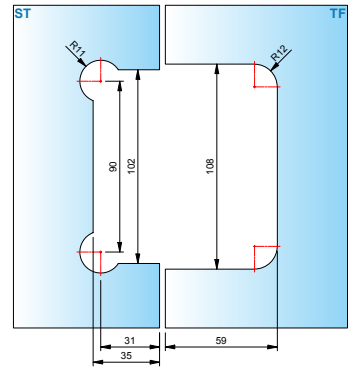



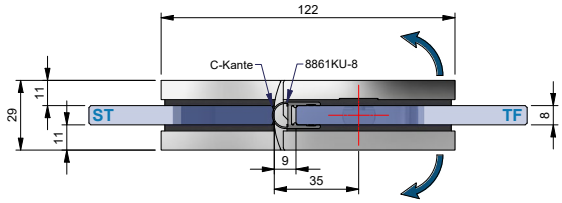

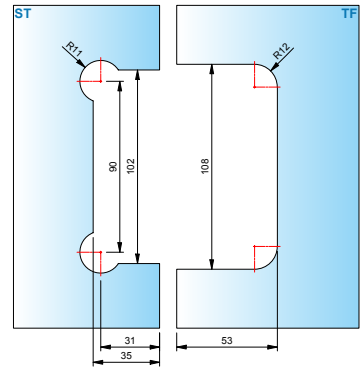

with seal profile 8861KU0-8-2010 (2500),
glass processing for 8 mm

ST = Side panel
TF = Door panel
W = Wall

8952ZN Glass-Glass 180°

MADE IN GERMANY



with seal profile 8857KU0-8-2010 (2500), glass processing for 8 mm

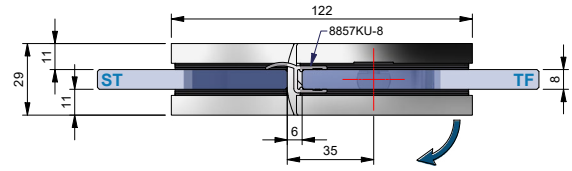

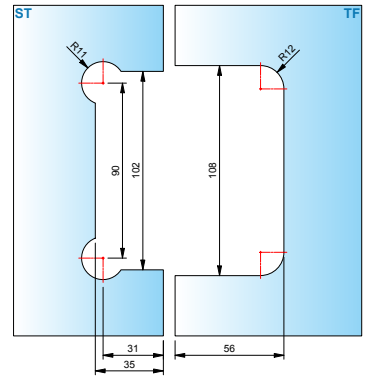



with seal profile 8845KU0-K8-2500, glass processing for 8 mm

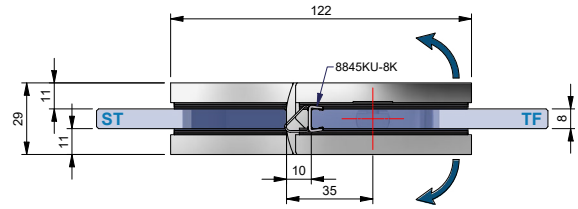

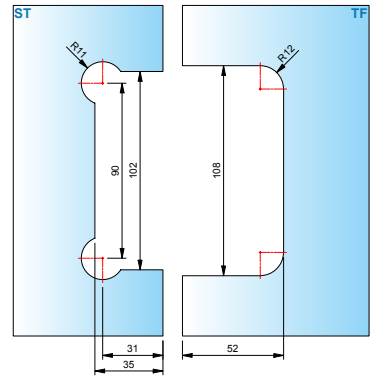

ST = Side panel
TF = Door panel
W = Wall

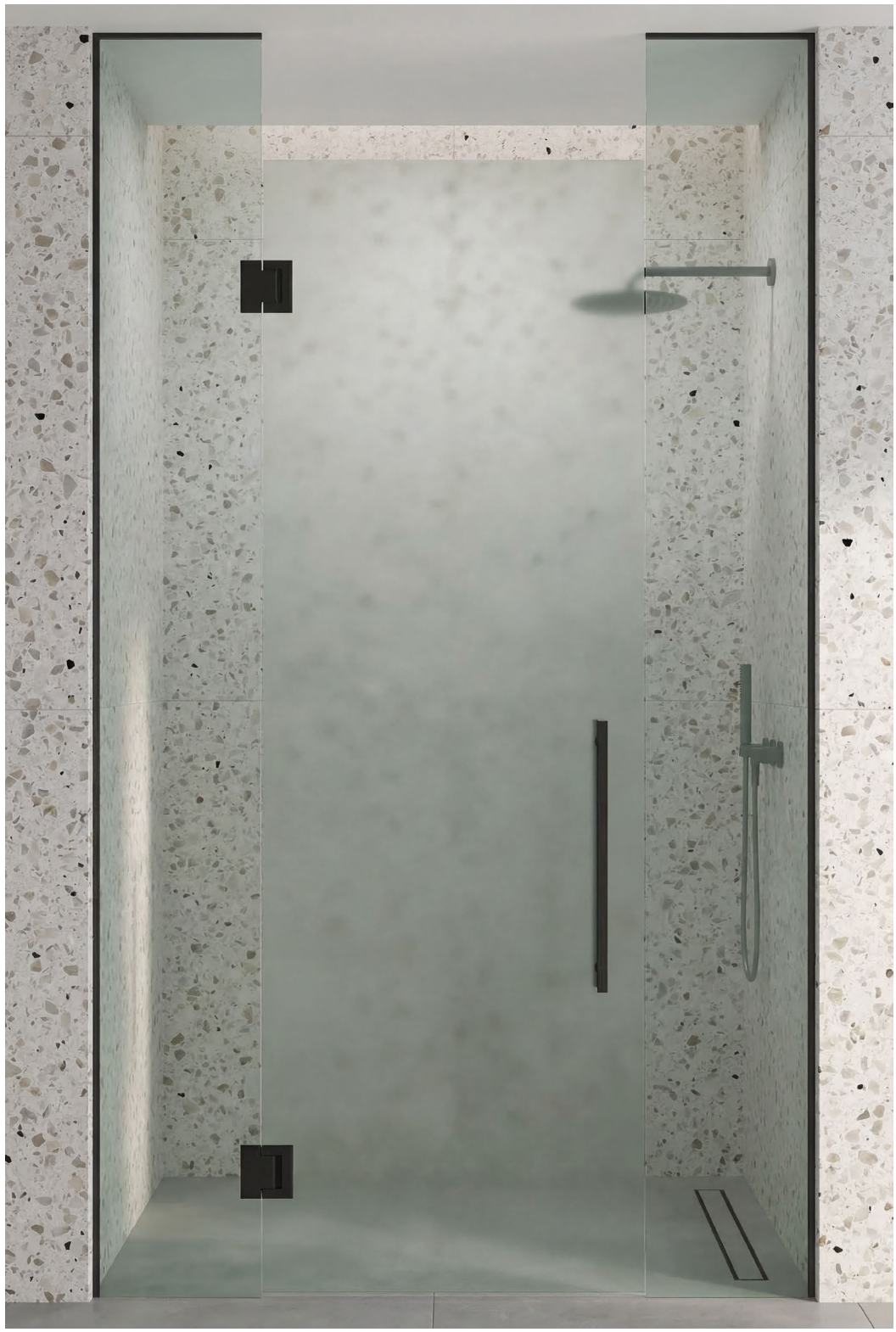

8954ZN Glass-Glass 90°

MADE IN GERMANY



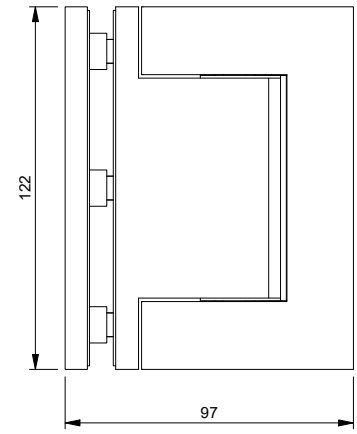

article no.		glass thickness
8954__		8/10*/12* mm
finish		
ZN5	gloss chrome	
ZN1	matt chrome	
ZNPVD22	stainless steel optic	
ZNPVD35	black matt	
ZN135	deep blackmatt	

Features
Opens up to 95° in both directions, single-sided mounting bracket, infinitely adjustable closed-position setting, self-closing from 55°, load capacity (2 hinges) 70 kg (max. door panel width 1200 mm)

***Imprtant**
Designed for 8 mm glass; inlays for 10 mm are included. When using these hardware sets, please order the following spacer set free of charge for each set:
for 12 mm glass thickness, Item No. HZ-SET26
You can request glass processing specifications for 10 or 12 mm glass from our technical department

8954ZN Glass-Glass 90°

MADE IN GERMANY



without seal profile, glass thickness 8 mm

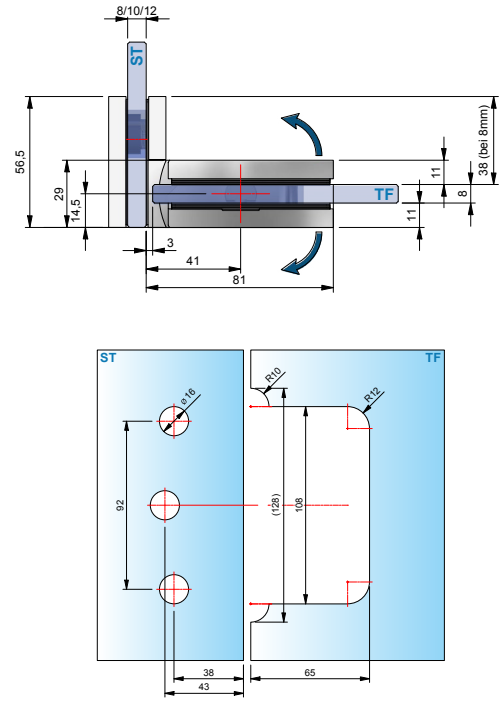



with seal profile 8861KU0-8-2010 (2500), glass thickness 8 mm

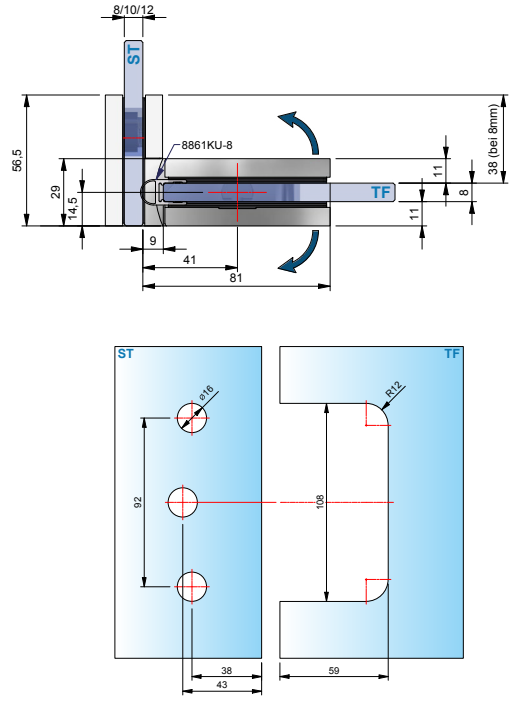

ST = Side panel
TF = Door panel
W = Wall

8954ZN Glass-Glass 90°

MADE IN GERMANY





With the 90° Glass-Glass hinge, only glass holes in the side panelare required; this allows the glass door panel to be set back inward, and the overhang (A) can be determined as desired.

8954ZN Glass-Glass 90°

MADE IN GERMANY



without seal profile, glass thickness 8 mm

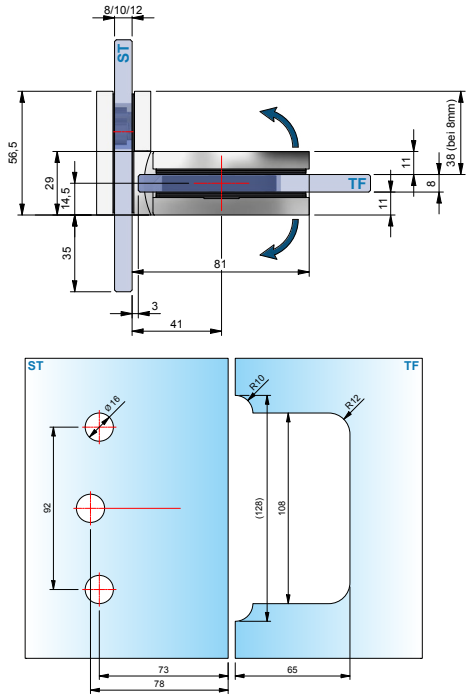



with seal profile 8861KU0-8-2010 (2500), glass thickness 8 mm

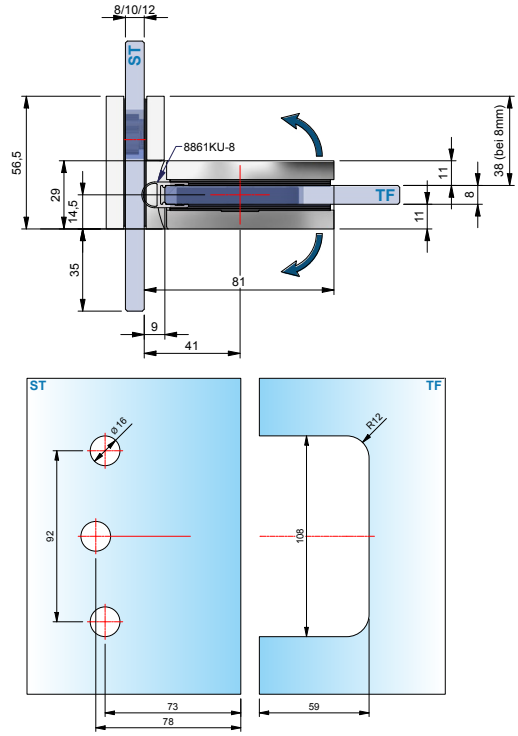

ST = Side panel
TF = Door panel
W = Wall

Folding systems

MADE IN GERMANY



Load capacity for a system width of 1200 mm: 70kg
orresponds to a door height
of 2700 mm with 8 mm glass
or 2330 mm with 10 mm glass



Load capacity for a system width of 1300 mm: 62 kg
orresponds to a door height
of 2380 mm with 8 mm glass
or 1900 mm with 10 mm glass



Load capacity for a unit width of 1400 mm: 54 kg
corresponds to a door height
of 1930 mm with 8 mm glass
or 1540 mm with 10 mm glass



Load capacity for a unit width of 1500 mm: 45 kg
corresponds to a door height
of 1500 mm with 8 mm glass
or 1200 mm with 10 mm glass

TURA pro + TURA

MADE IN GERMANY



8950ZN



8960ZN

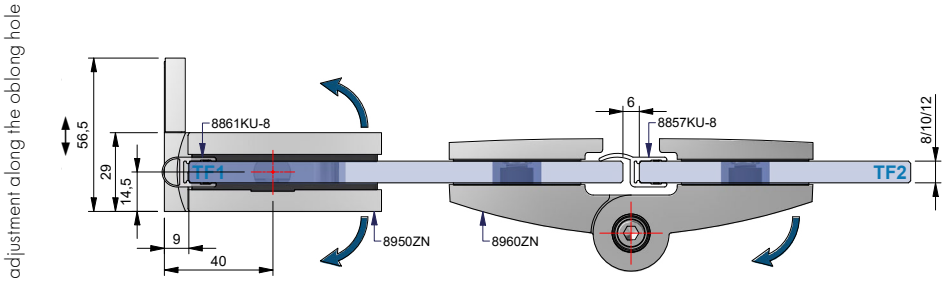

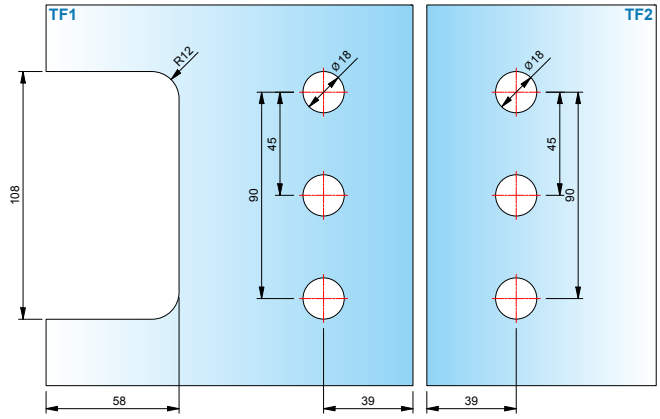

- Glass Processing for 8 mm
- Recommended sealing profiles for folding systems: 8861KU0-8-2010 (2500) and 8857KU0-8-2010 (2500)

Folding systems

MADE IN GERMANY



TURA pro + TURA

MADE IN GERMANY

Folding System 1: (GW90° - GG180°)
Folding System 8950ZN + 8960ZN, 8 mm glass
with gasket 8861KU_-8 + 8857KU_-8

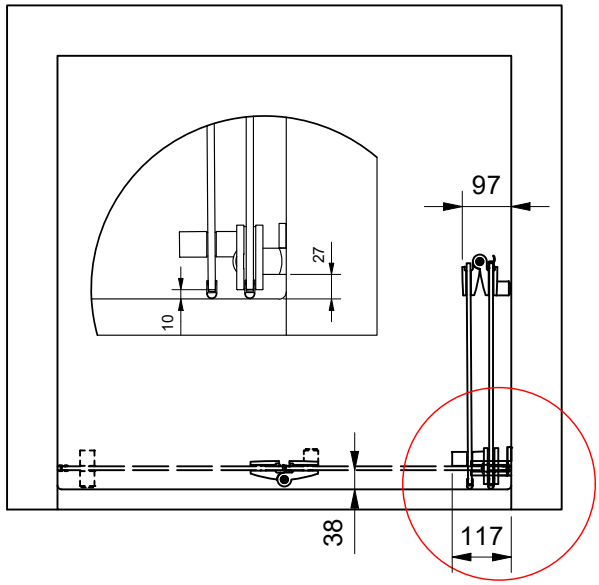



Folding System 2: (GG90° - GG180°)
Folding System 8954ZN + 8960ZN, 8 mm glass
er
with gasket 8861KU_-8 + 8857KU_-8

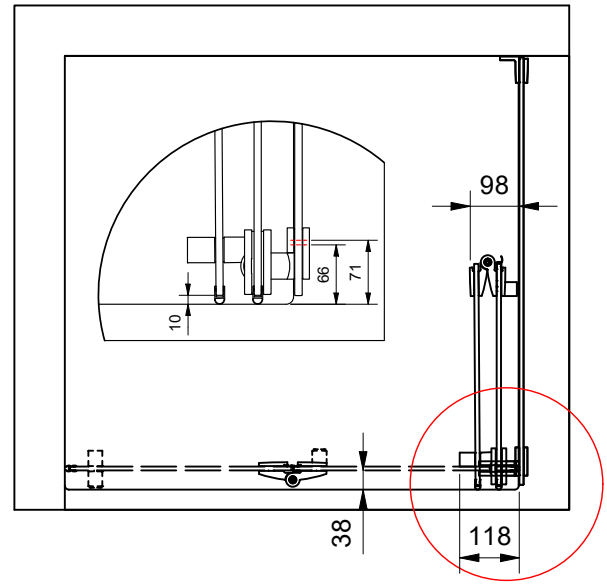



available **surface colors**



ZN5
gloss chrome



ZN1
matt chrome



ZNPVD22
stainless steel optic



ZNPVD35
black matt

compatibility chart for fittings manufacturer colors see page 14





corresponding **angle brackets**

for FLUTURE can be found on page 246.

MADE
IN
GERMANY



TURA

heavy-duty striker door hinge



TURA – fantastic solutions for large all-glass applications

MADE IN GERMANY

The trend in light-flooded rooms and spacious bathrooms and also bath landscapes, continues unabated. The result is that allglass doors must have a higher load capacity due to their larger dimensions and greater weight. Pauli + Sohn has developed the special heavy-duty hinge "TURA" for this requirement.

- load capacity (2 hinges):
  max. permissible weight: 70 kg
  max. door panel width: 1200 mm
  max door panel height: 2700 mm
- striker door hinge: glass–wall / glass–glass
- matching corner brackets
- fully adjustable closed position
- self-closing during the last 15 - 20°
- hinge height 122 mm
- continuous seal
- areas of application: wellness area, barrier-free bathrooms, public projects

(*not for swimming pool environments)

oversizes with folding systems without risk of over opening

load capacity for system width 1200 mm: 70 kg

corresponds to a door height of 2330 mm with 10 mm glass
corresponds to a door height of 2700 mm with 8 mm glass

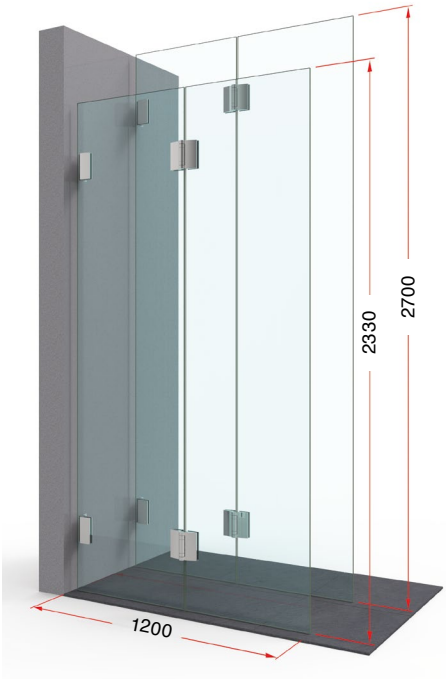

load capacity for system width 1300 mm: 62 kg

corresponds to a door height of 1900 mm with 10 mm glass
corresponds to a door height of 2380 mm with 8 mm glass

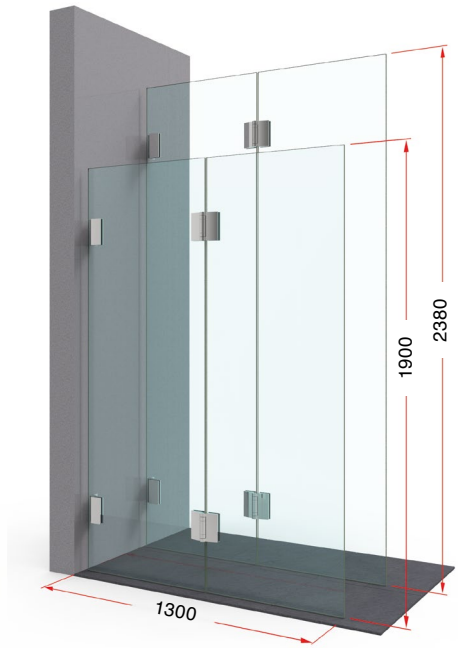

load capacity for system width 1400 mm: 54 kg

corresponds to a door height of 1540 mm with 10 mm glass
corresponds to a door height of 1930 mm with 8 mm glass

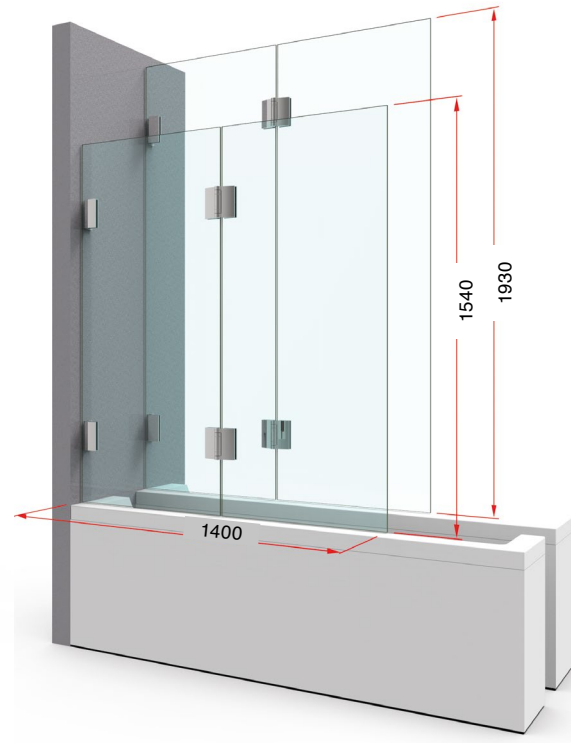



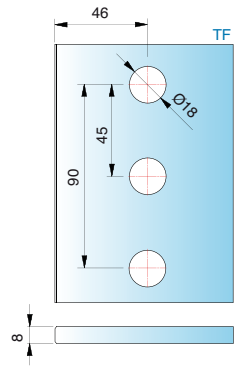

We recommend to install all available striker hinges with sealing profiles to avoid damage to the glass.
Please note that the instruction manual can be found at www.pauli.de.

- three holes in the glass allow for higher load capacity
- for wall mounting we offer extra long DIN9135 screws.

dimensions of folding system – glass-wall

MADE IN GERMANY

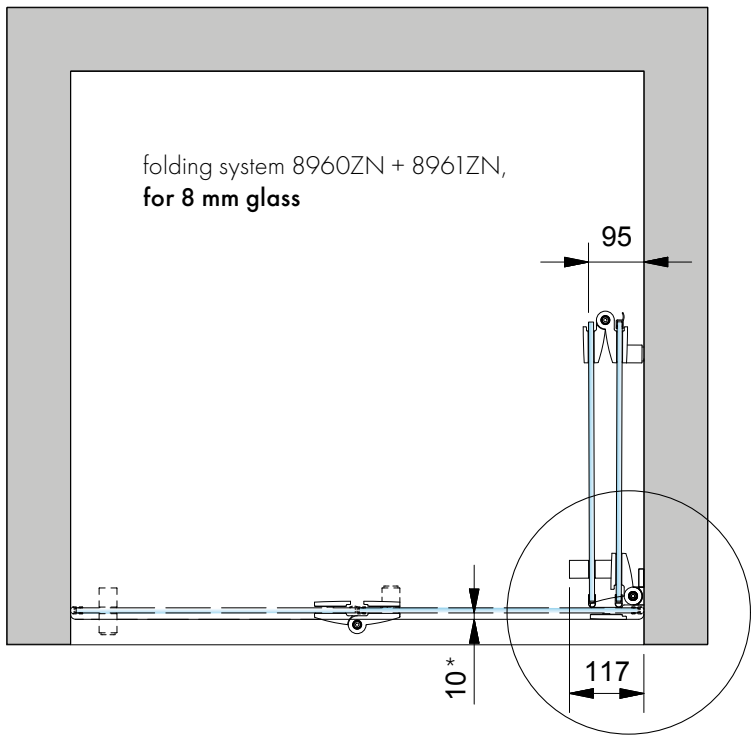

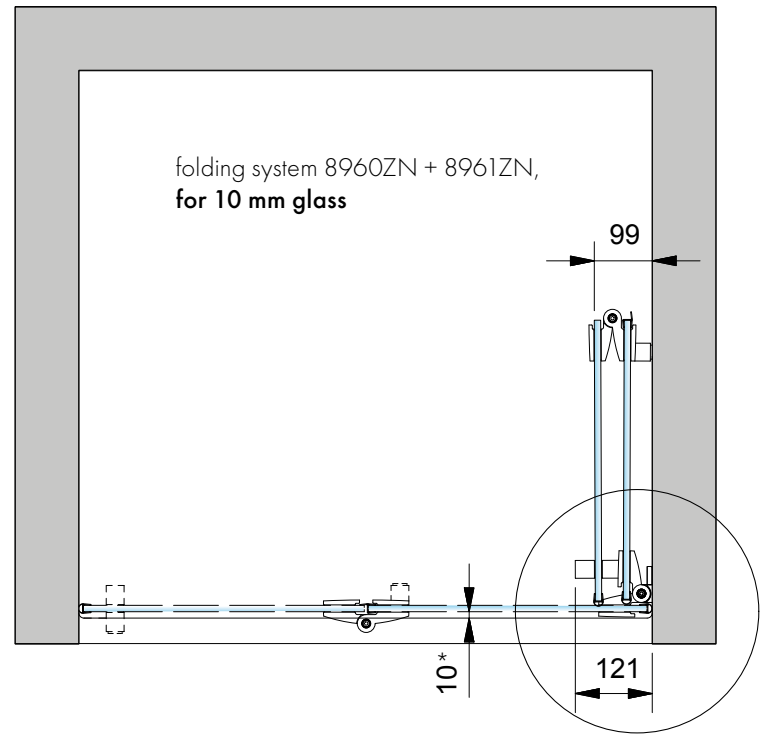

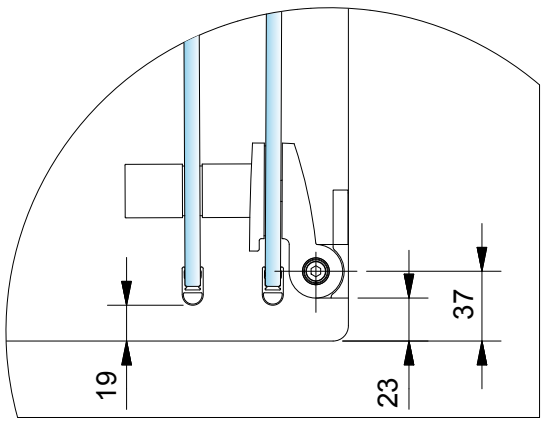

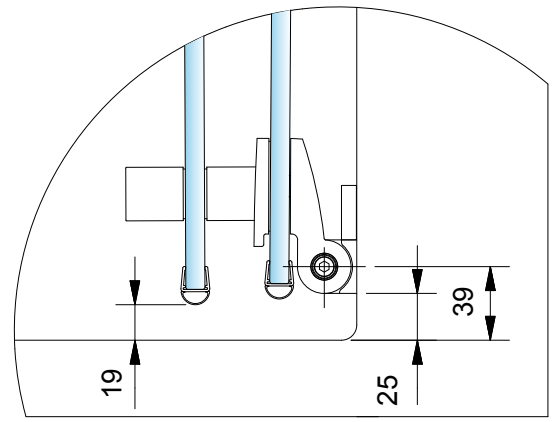

* tray offset dimension

installation instructions

MADE IN GERMANY

- we recommend for the folding systems

the sealing profile 8865KU0

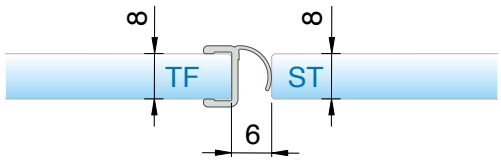

or 8857KU0

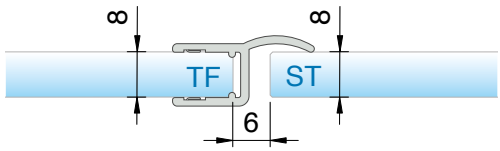

- drill hole spacing for:



8273ZN



8271ZN

for more information about the knobs 8271 and 8273 see page 301.

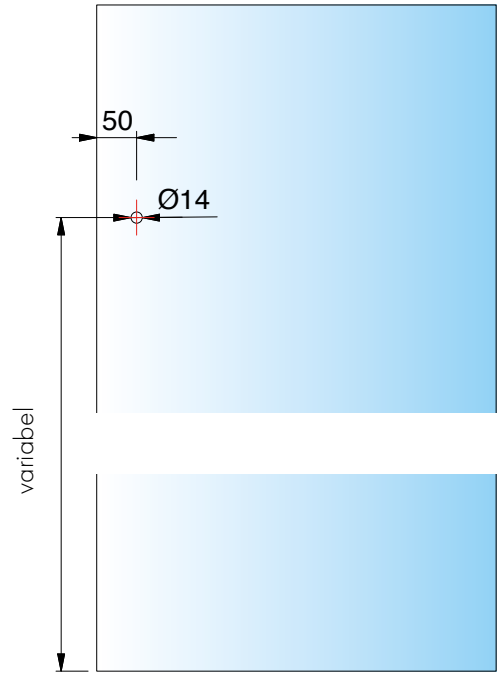

dimensions of folding system – glass-glass

MADE IN GERMANY

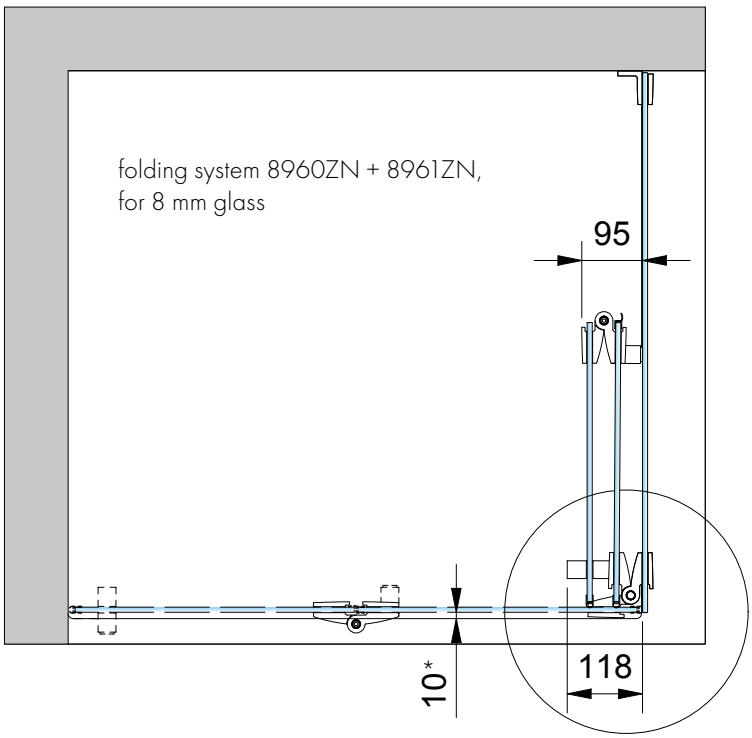

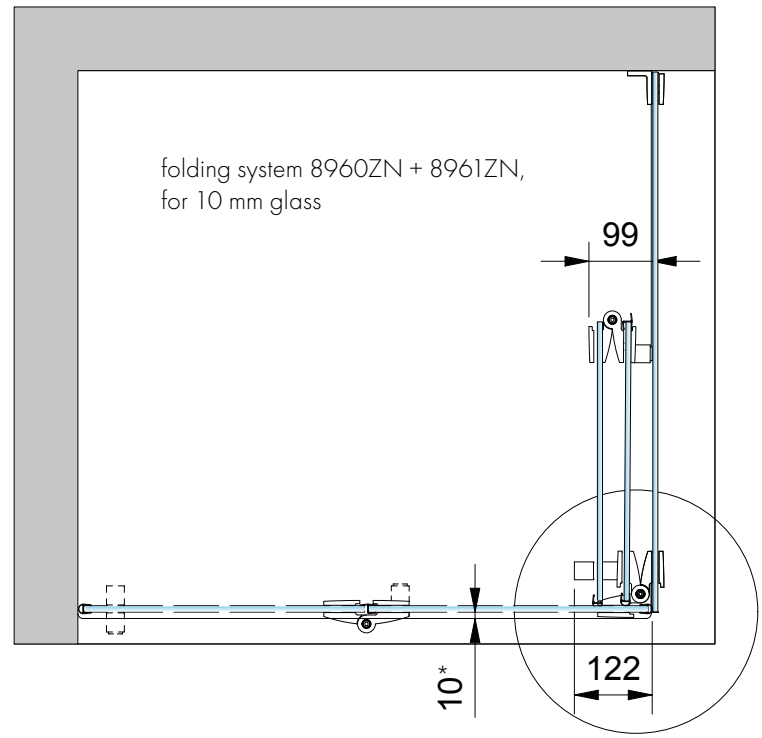

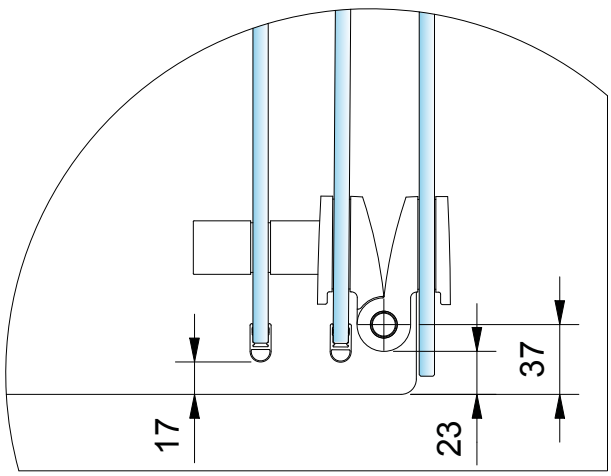

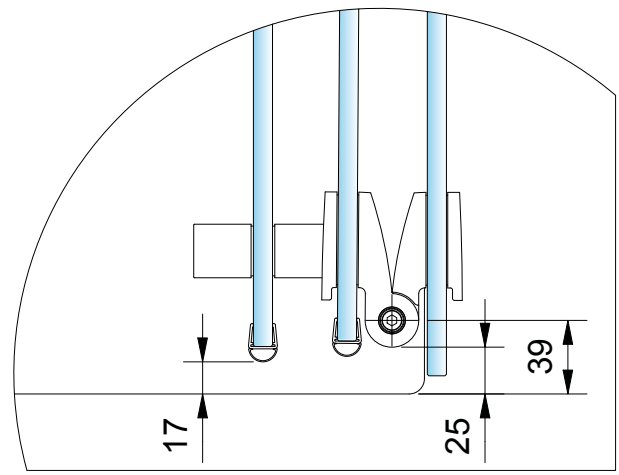

* tray offset dimension

installation instructions for the use of laminated glass panels

MADE IN GERMANY

- due to the possible offset with laminated safety glass panels, it is essential to ensure that the counter plate is mounted centrally in the glass hole. Note: Incorrect installation can lead to glass breakage!

RIGHT

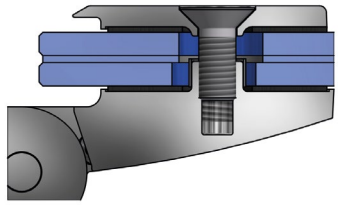

WRONG

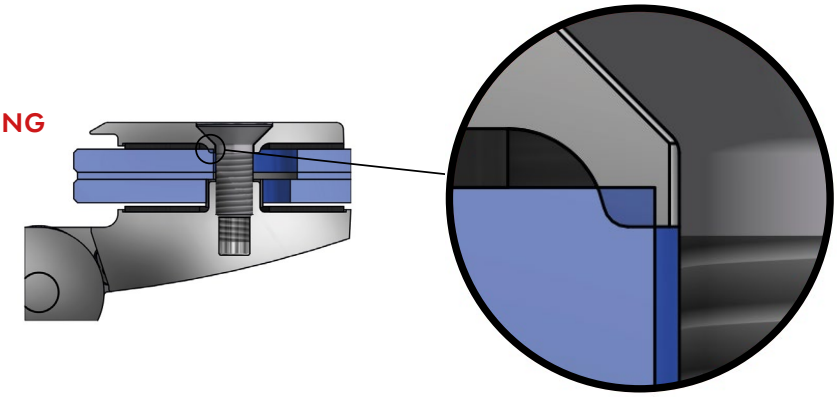

accessories - screws

MADE IN GERMANY

chipboard screw DIN9135



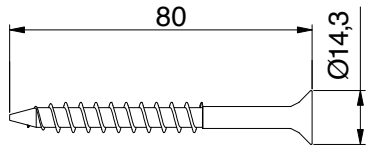

article no.	features
Z100VA	countersink head, TX40 drive 8x80 A2

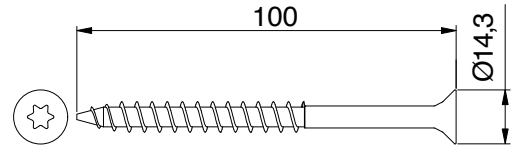

article no.	features
Z101VA	countersink head, TX40 drive 8x100 A2





- also available as **sauna hinge** (see page 406)

8962ZN glass-wall 90°

MADE IN GERMANY



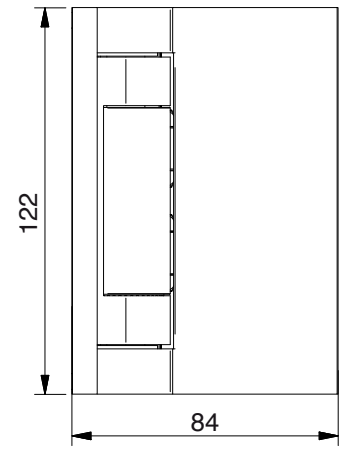

article no.		glass thickness
8962__		8/10/12 mm
finish		
	ZN5	gloss chrome
	ZN1	matt chrome
	ZNPVD22	stainless steel optic
	ZNPVD35	black matt

features
one-sided opening outwards minimum 90°, concealed screws, wall mounting inside with oblong hole, closed position adjustable, seal profile notched in hinge area

*You can request the glass processing for 12 mm glass from our technical department.

for glass 8 mm



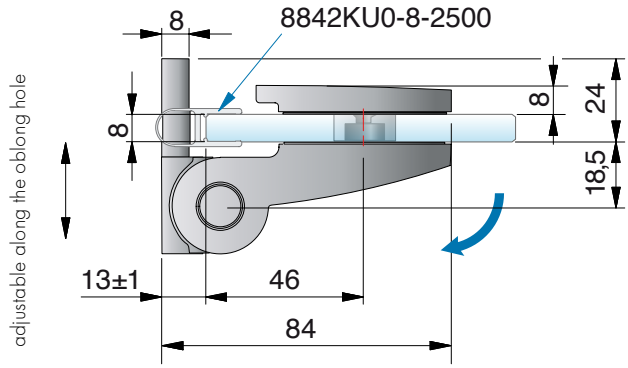

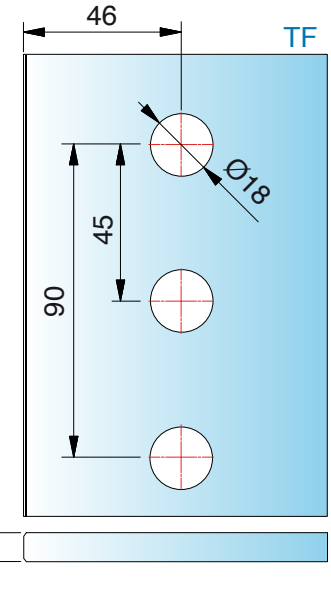

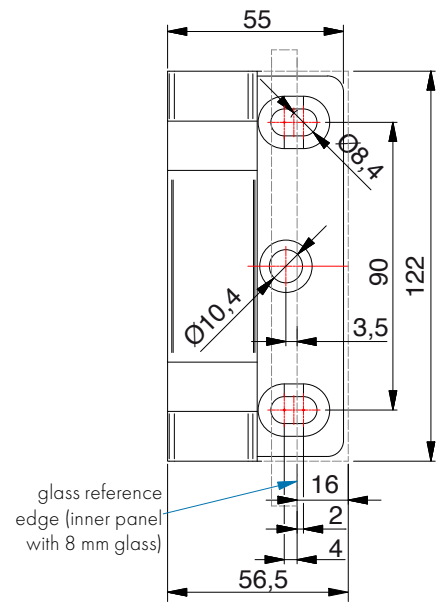

ST = side panel I TF = door panel I W = wall

8962ZN glass-wall 90°

MADE IN GERMANY

for glass 10 mm



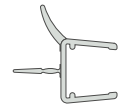

with seal profile 8864KU0-12-2500, *for 10 mm glass

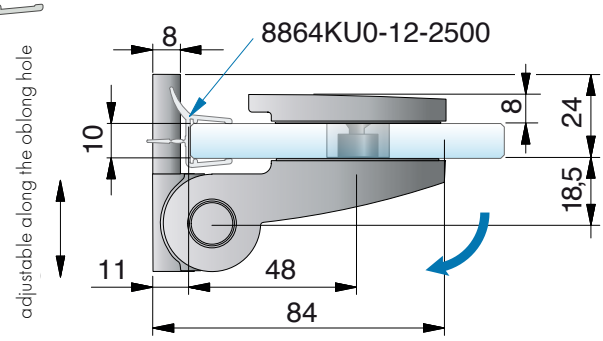

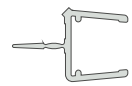

with seal profile 8876KU0-12-2500, *for 10 mm glass

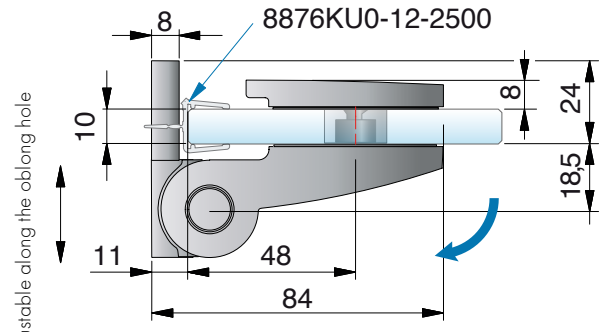

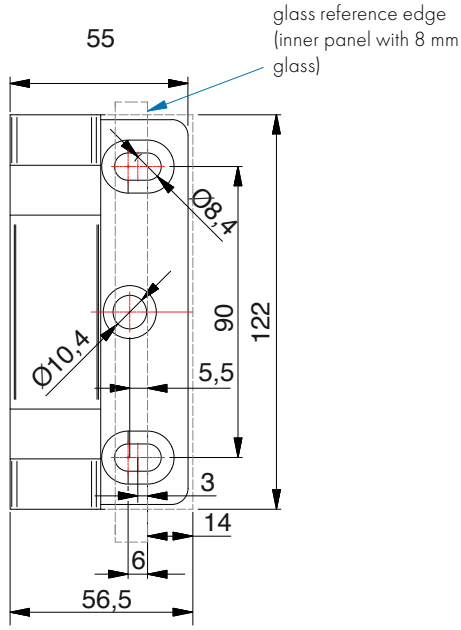

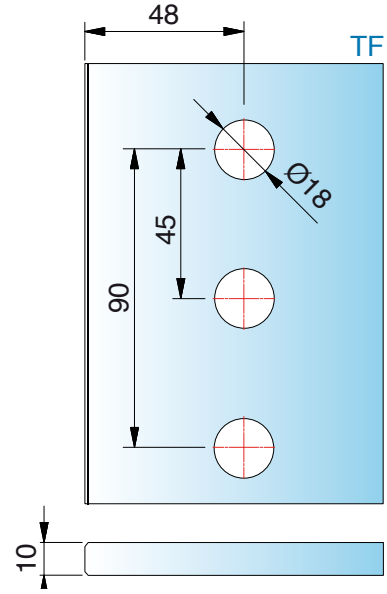

ST = side panel I TF = door panel I W = wall

8961ZN glass-wall 90° - wall mounting outside

MADE IN GERMANY



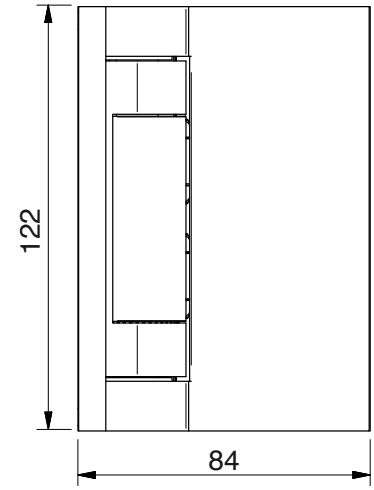

article no.	glass thickness
8961__	8/10/12 mm



finish		
	ZN5	gloss chrome
	ZN1	matt chrome
	ZNPVD22	stainless steel optic
	ZNPVD35	black matt

features

one-sided opening outwards 90°, concealed screws, wall mounting outside with oblong hole, closed position adjustable, seal profile in hinge area continuous

*You can request the glass processing for 12 mm glass from our technical department.

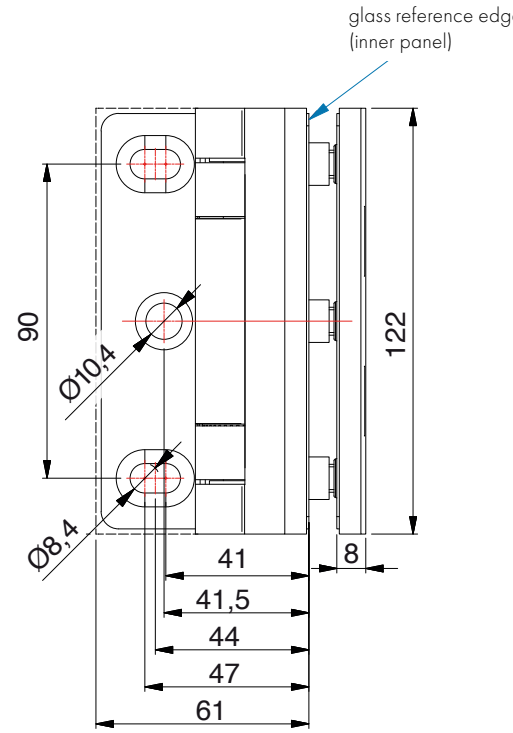

8961ZN glass-wall 90° - wall mounting outside

MADE IN GERMANY

for glass 8 mm



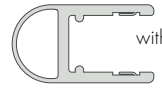

with seal profile 8861KU0-8-2010 (2500), *for 8 mm glass

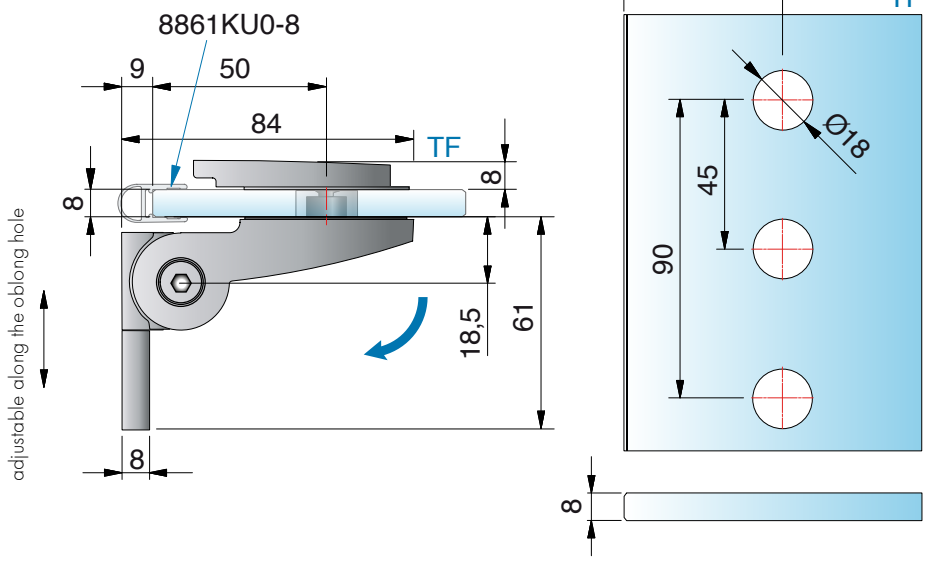

for glass 10 mm

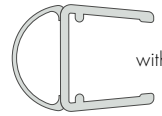

with seal profile 8861KU0-12-2500, *for 10 mm glass

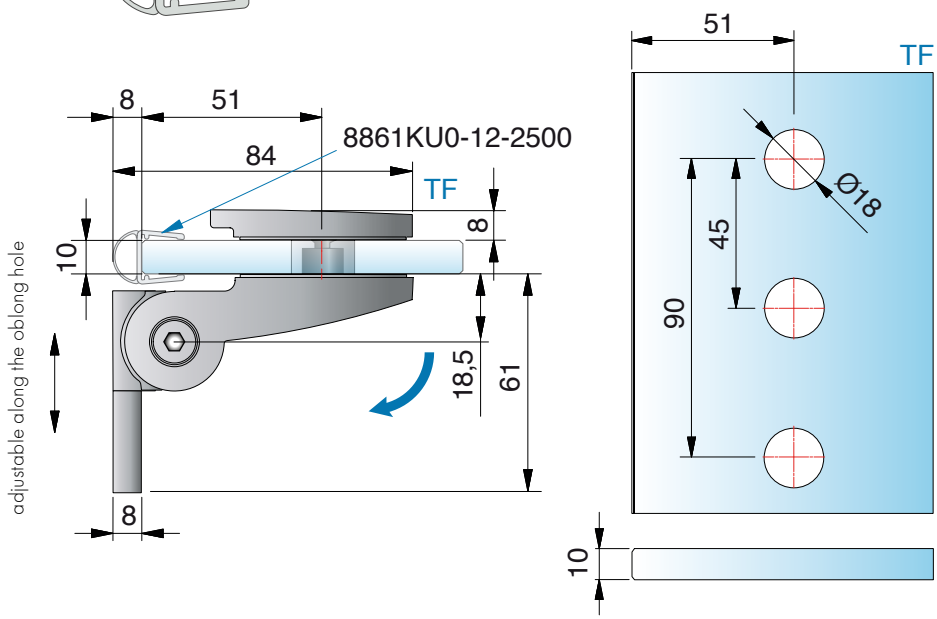

*You can request the glass processing for 12 mm glass from our technical department.

ST = side panel I TF = door panel I W = wall

8961ZN glass-wall 90° - wall mounting inside

MADE IN GERMANY



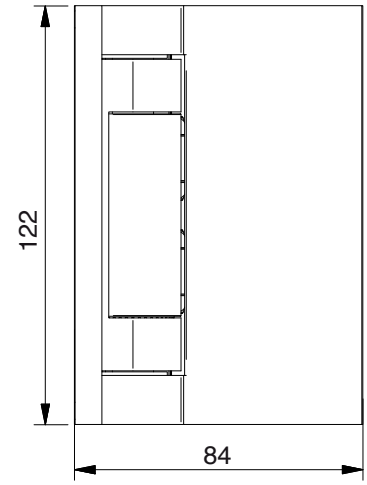

article no.	glass thickness
8961__	8/10/12 mm

finish		
	ZN5	gloss chrome
	ZN1	matt chrome
	ZNPVD22	stainless steel optic
	ZNPVD35	black matt

features

one-sided opening outwards minimum 90°, concealed screws, wall mounting inside with oblong hole, closed position adjustable, seal profile notched in hinge area.

*You can request the glass processing for 12 mm glass from our technical department.

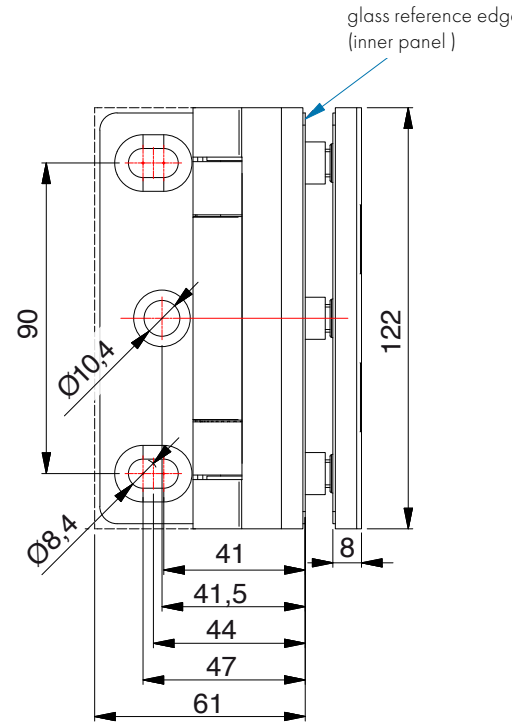

8961ZN glass-wall 90° - wall mounting inside

MADE IN GERMANY

*for glass 8 mm



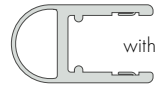

with seal profile 8861KU0-8-2010 (2500), *for 8 mm glass

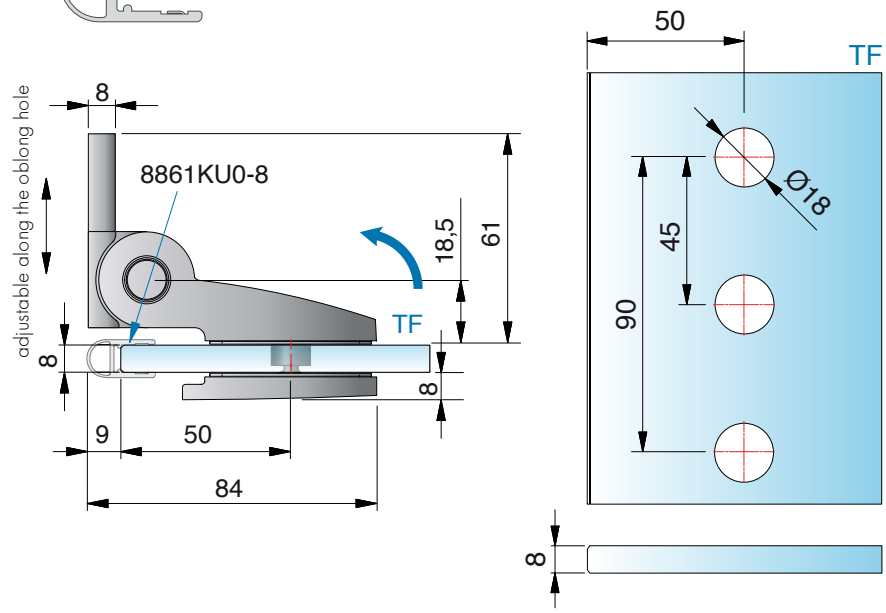

*for glass 10 mm



with seal profile 8861KU0-12-2500, *for 10 mm glass

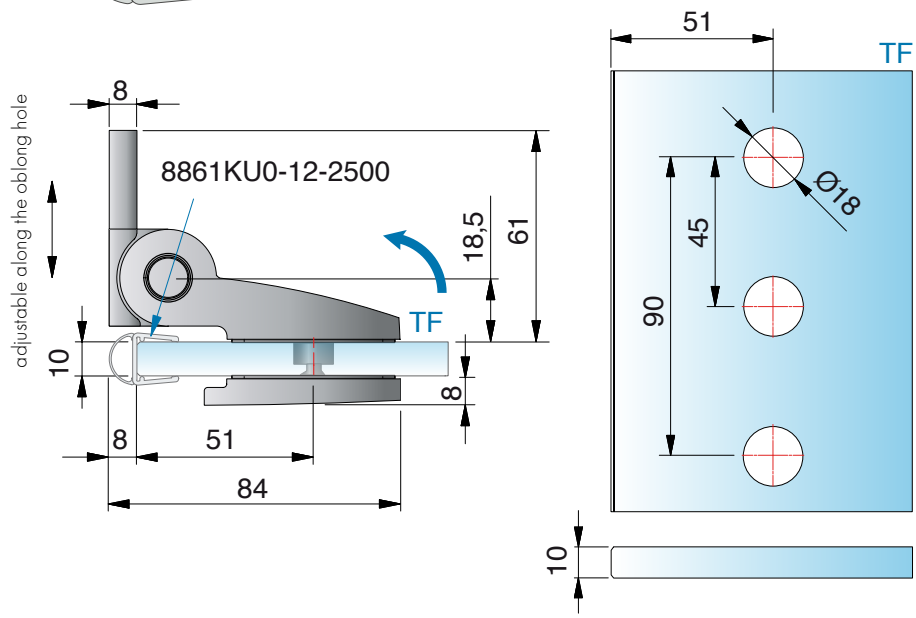

*You can request the glass processing for 12 mm glass from our technical department.

ST = side panel I TF = door panel I W = wall

8960ZN glass-glass 90°

MADE IN GERMANY



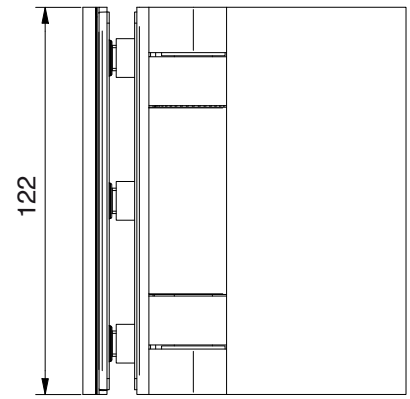

features

one-sided opening outwards minimum 90°, concealed screws, wall mounting inside with oblong hole, closed position adjustable, seal profile notched in hinge area.

*You can request the glass processing for 12 mm glass from our technical department.

article no.	glass thickness
8960__	8/10/12 mm



finish	
ZN5	gloss chrome
ZN1	matt chrome
ZNPVD22	stainless steel optic
ZNPVD35	black matt

*for glass 8 mm

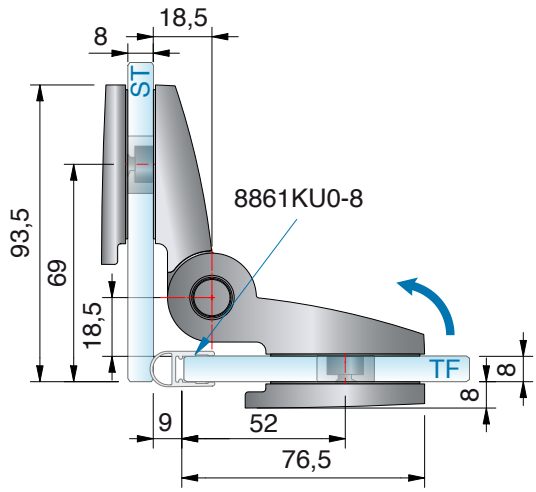

ST = side panel I TF = door panel I W = wall

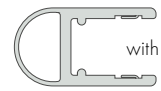

with seal profile 8861KU0-8-2010 (2500), *for 8 mm glass

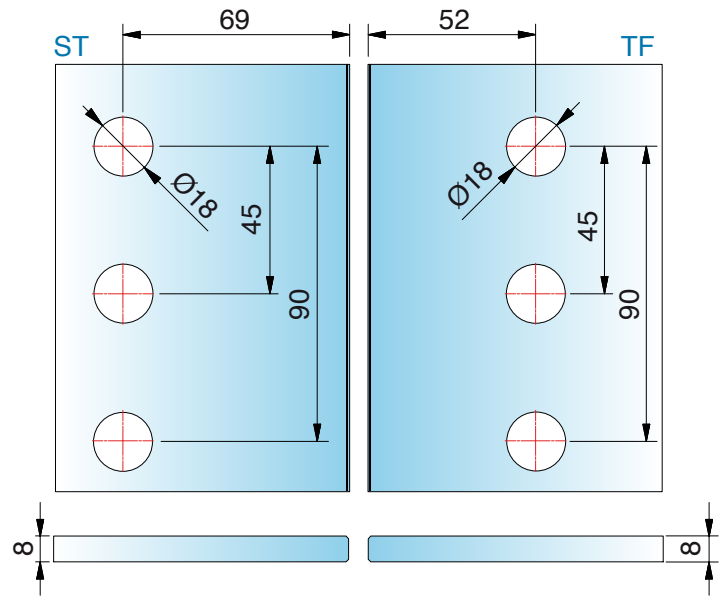

8960ZN glass-glass 90°

MADE IN GERMANY

***for glass 10 mm**



with seal profile 8861KU0-12-2500, *for 10 mm glass

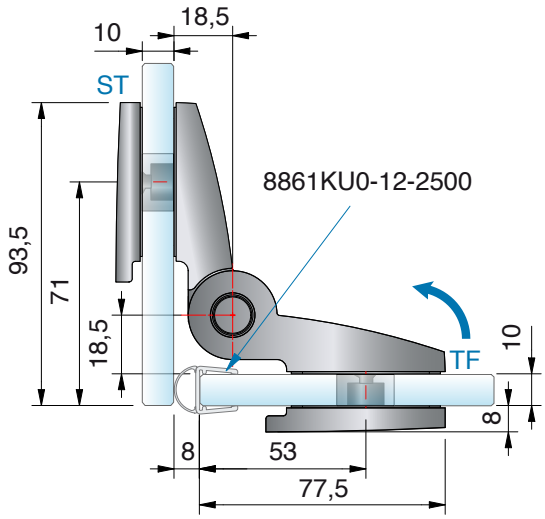

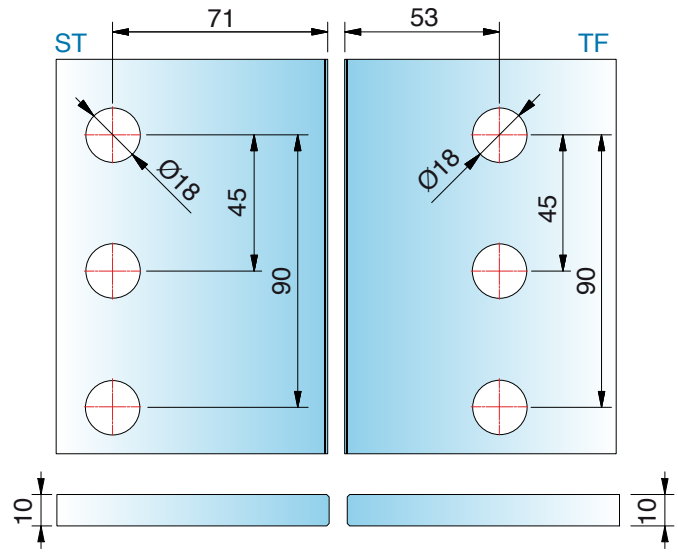



General note

due to the system, a superficial matting may occur in the area of the rollers on the visible surface as a result of micro-scratches

ST = side panel I TF = door panel I W = wall

8960ZN glass-glass 180° - opening outwards

MADE IN GERMANY



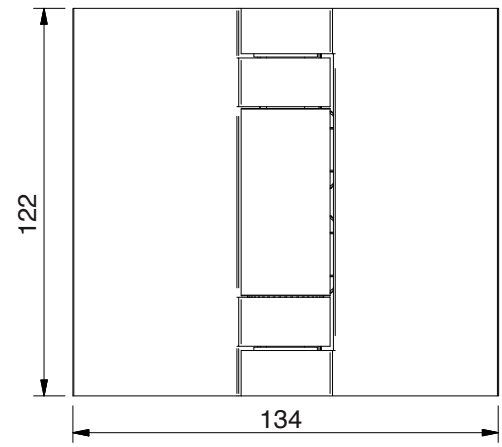

features

one-sided opening outwards 180°, concealed screws, closed position adjustable, seal profile in hinge area continuous

*You can request the glass processing for 12 mm glass from our technical department.

article no.		glass thickness
8960__		8/10/12 mm
finish		
	ZN5	gloss chrome
	ZN1	matt chrome
	ZNPVD22	stainless steel optic
	ZNPVD35	black matt

*for glass 8 mm

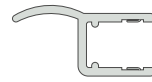

with seal profile 8857KU0-8-2010(2500), *for 8 mm glass

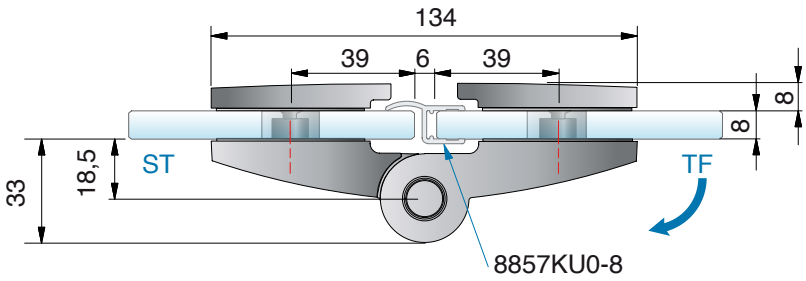

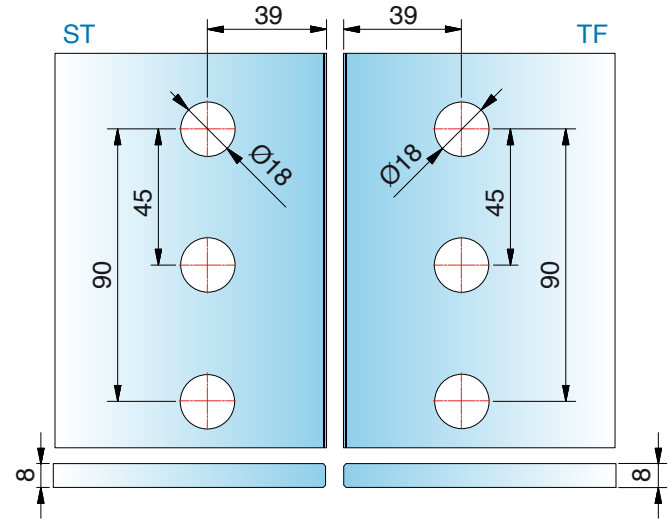

ST = side panel I TF = door panel I W = wall

8960ZN glass-glass 180° - opening outwards

MADE IN GERMANY

for glass 10 mm



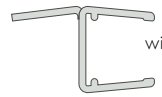

with seal profile 8857KU0-12-2500, *for 10 mm glass

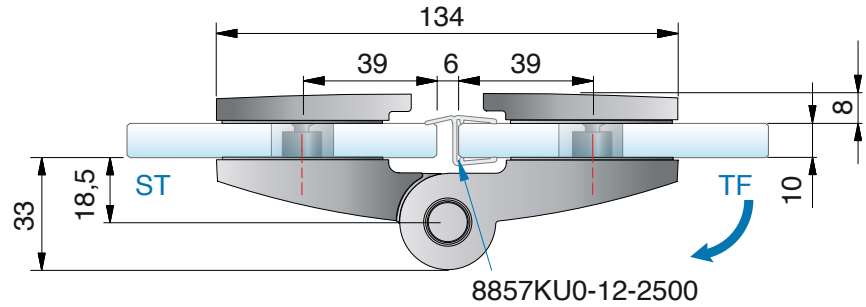

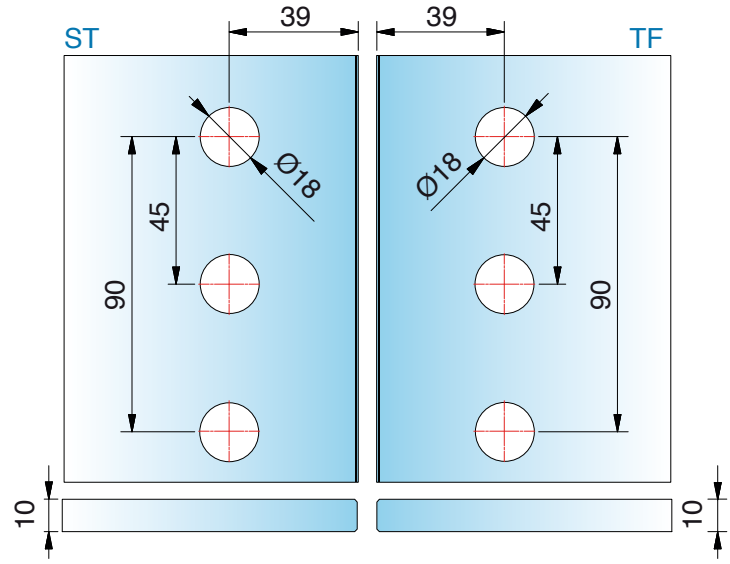

*You can request the glass processing for 12 mm glass from our technical department.

ST = side panel I TF = door panel I W = wall

8960ZN glass-glass 180° - opening outwards

MADE IN GERMANY



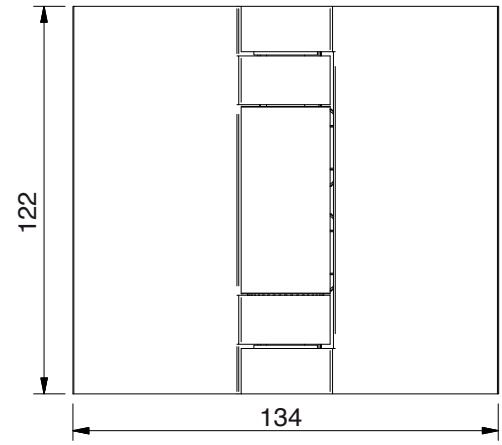

features
one-sided opening outwards 180°, concealed screws, closed position adjustable, seal profile in hinge area continuous
*You can request the glass processing for 12 mm glass from our technical department.

article no.	glass thickness
8960__	8/10/12 mm



finish		
	ZN5	gloss chrome
	ZN1	matt chrome
	ZNPVD22	stainless steel optic
	ZNPVD35	black matt

*for glass 8 mm

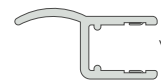

with seal profile 8857KU0-8-2010(2500), *for 8 mm glass

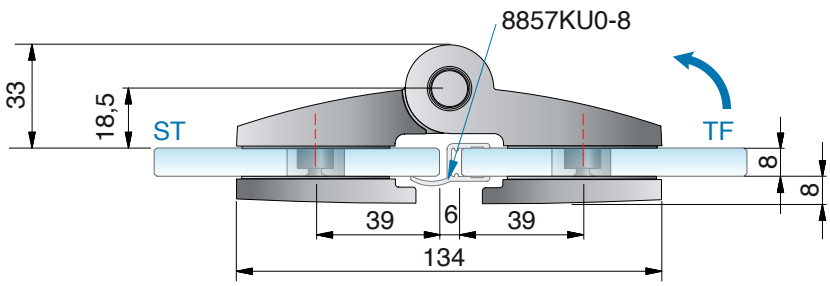

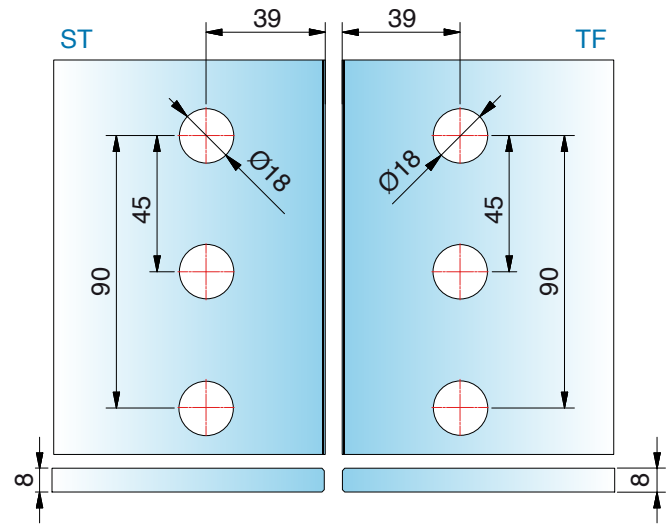

ST = side panel I TF = door panel I W = wall

8960ZN glass-glass 180° - opening outwards

MADE IN GERMANY

***for glass 10 mm**



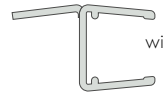

with seal profile 8857KU0-12-2500, *for 10 mm glass

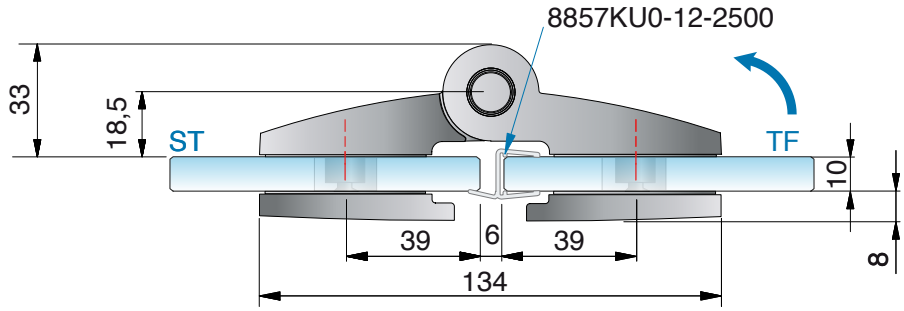

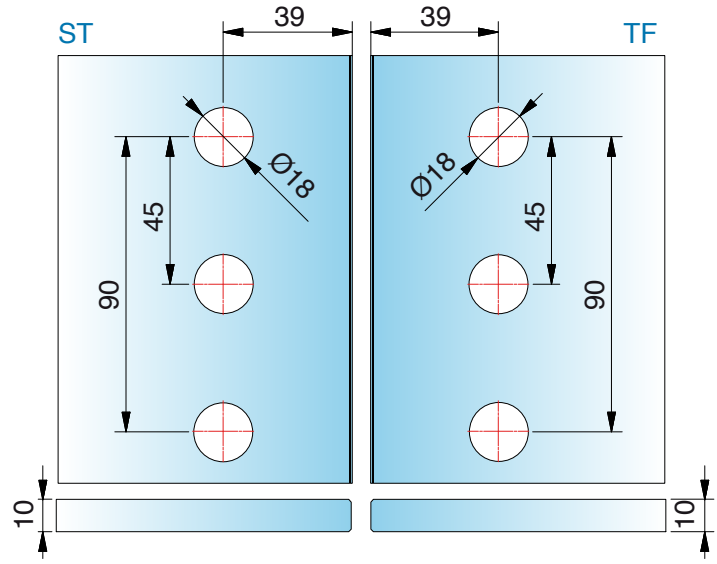

*You can request the glass processing for 12 mm glass from our technical department.

ST = side panel I TF = door panel I W = wall

8968ZN glass-wall 90°

MADE IN GERMANY

for 8/10/12 mm glass



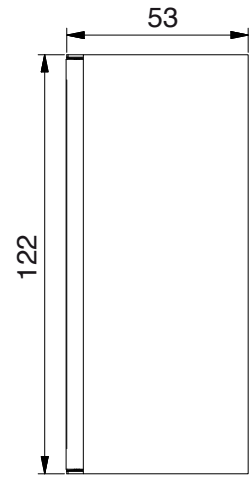

article no.	glass thickness
8968_	8/10/12 mm

finish:

	ZN5	gloss chrome
	ZN1	matt chrome
	ZNPVD22	stainless steel optic
	ZNPVD35	black matt

features: fixed, wall mounting with oblong hole, with cover plate

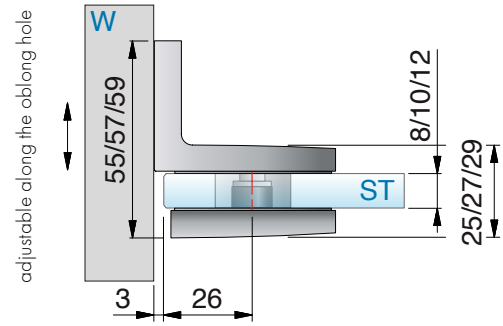

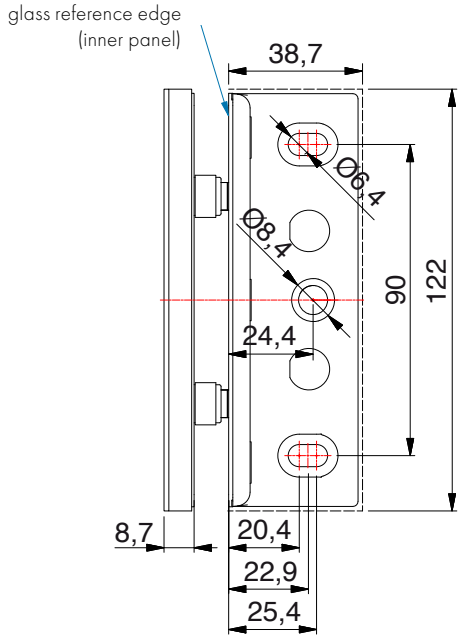

glass processing for 8/10/12 mm

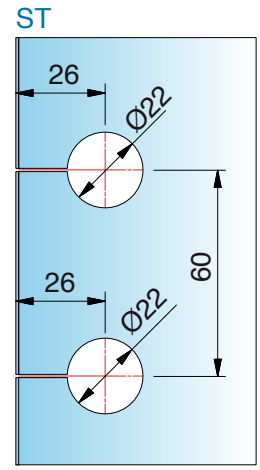

ST = side panel I TF = door panel I W = wall

8968ZN glass-wall 90°

MADE IN GERMANY



8969ZN glass-glass 90°

MADE IN GERMANY

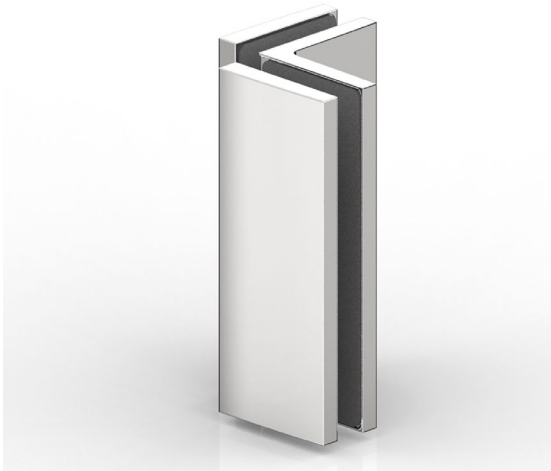

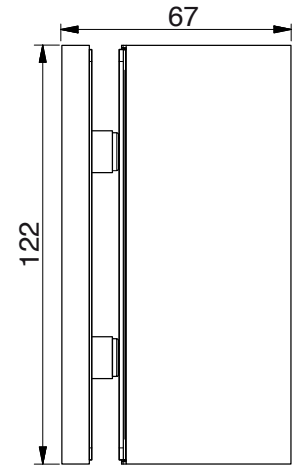

article no.		glass thickness
8969_		8/10/12 mm
finish:		
	ZN5	gloss chrome
	ZN1	matt chrome
	ZNPVD22	stainless steel optic
	ZNPVD35	black matt

features: fixed, with cover plate

*You can request the glass processing for 12 mm glass from our technical department.

*for glass 8 mm

*glass processing for 8 mm

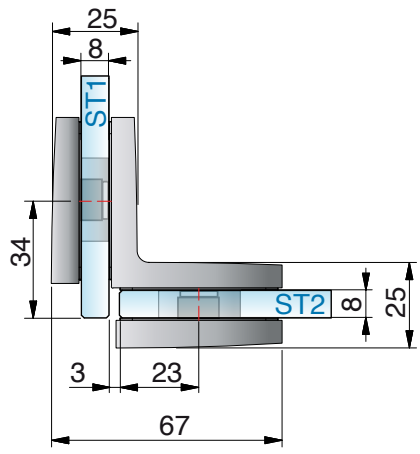

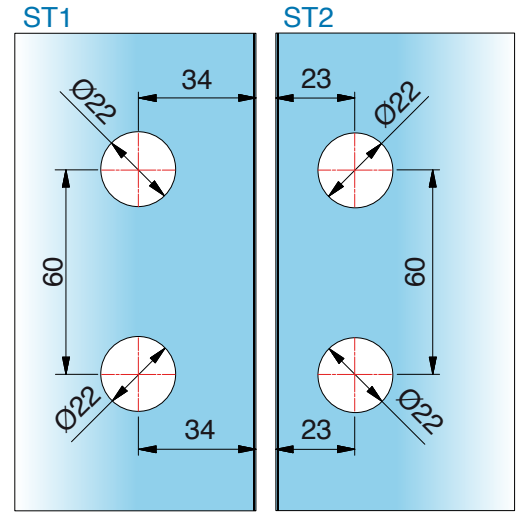

ST = side panel I TF = door panel I W = wall

8969ZN glass-glass 90°

MADE IN GERMANY

*for glass 8 mm

mitre cutting of glass

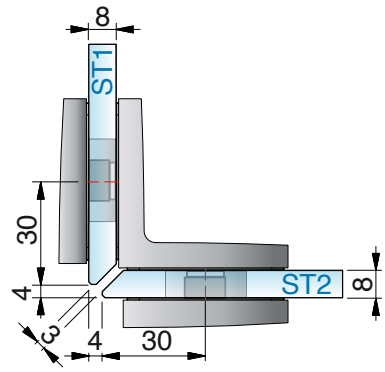

*glass processing for 8 mm

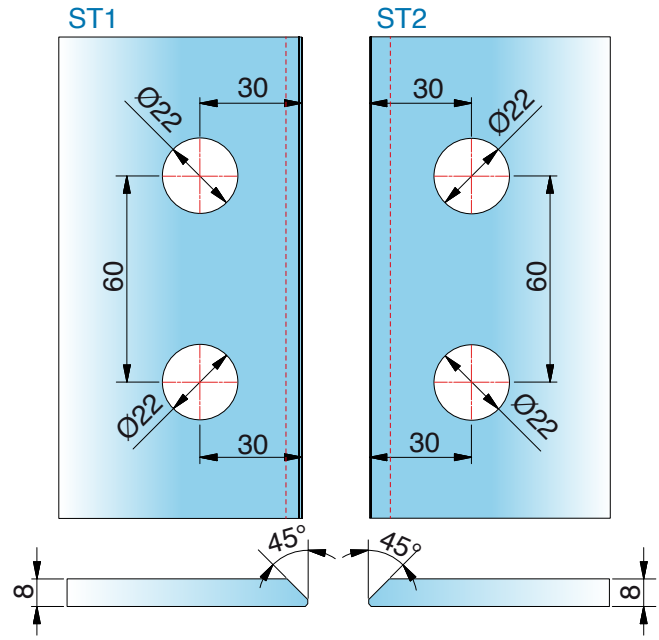

*for glass 10 mm

*glass processing for 10 mm

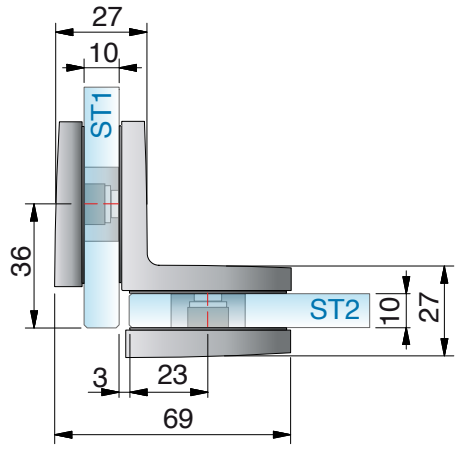

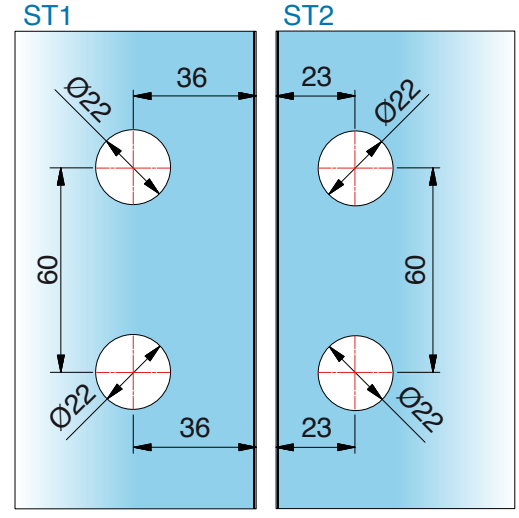

for mitre cutting of 10 mm glass, please contact our technical department.

ST = side panel I TF = door panel I W = wall

available **surface colors**



ZN5
gloss chrome



ZN1
matt chrome



ZNPVD22
stainless steel optic



ZN135
deep black matt

compatibility chart for fittings manufacturer colors see page 14







corresponding **angle brackets**

for FARFALLA can be found on page 260.

MADE
IN
GERMANY



FARFALLA

shower door hinge



FARFALLA – versatile and timeless

MADE IN GERMANY

This shower door hinge - which can be opened outwards or inwards one-sided - offers manifold possibilities. It is possible to create more than 50 different shower types, for example the complete folding of a glass segment for bathtub situations. The shower door seal ensures the highest degree of water retension. All wall mounts include cover plates and therefore the screws are concealed.

- concealed screws due to cover plates
- door hinge opens outwards or inwards in one direction
- assembly with full-length sealing profile possible
- the hinge axis is positioned outside of the glass door so that the glass segments can also be folded completely
- glass thickness: 6, 8 und 10 mm
- load capacity (2 hinges): 40kg corresponding to a glass door of 1000 x 2000 mm with glass thickness of 8mm
- the durability of the hardware has been tested internally according to DIN EN 14428:2015 5.5







Art.-Nr.	Artikelbezeichnung
8144-1GLAS-R500	curved glass door panel for FARFALLA H 2000 mm, R500
8143-1GLAS-R550	gebogener Glastürflügel für FARFALLA, H 2000 mm, R550



Art.-Nr.	Artikelbezeichnung
8147-1GLAS-R500	curved glass door panel for FARFALLA H 2000 mm, R500
8147-1GLAS-R550	curved glass door panel for FARFALLA H 2000 mm, R550

- The hinge pin is positioned outside the glass surface, which is why the glass panels can befully folded
- You can find the technical details forplanning in ourdimension sheets
- Before planning, please check with us regardingthe availability of the glass.

All striker door hinges must be installed with sealing profiles to prevent damage to the glass.
Please refer to our installation instruction flyer at www.pauli.de.

8128ZN

glass-wall 90° – opening outwards

MADE IN GERMANY



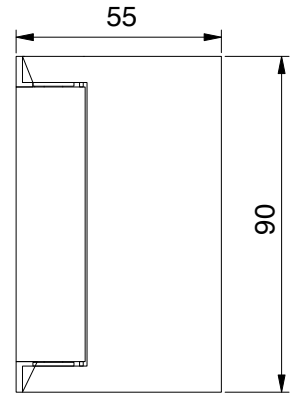

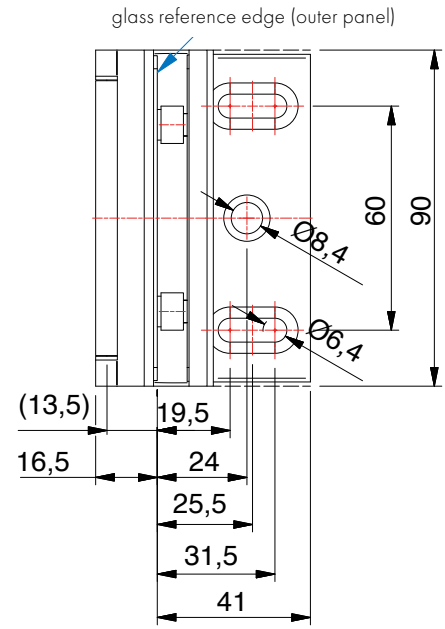

article no.	glass thickness
8128__	6/8/10 mm



finish	
ZN5	gloss chrome
ZN1	matt chrome
ZNPVD22	stainless steel optic
ZN135	deep black matt

features

opening outwards 180°, wall mount adjustable with the notch, comes with cover plate, full-length sealing profile, concealed screws due to cover plates
You can request the glass processing for 6 and 10 mm glass from our technical department.

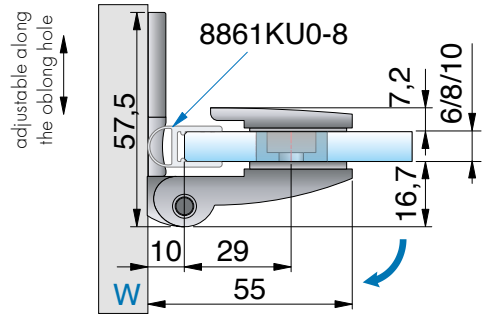

TF

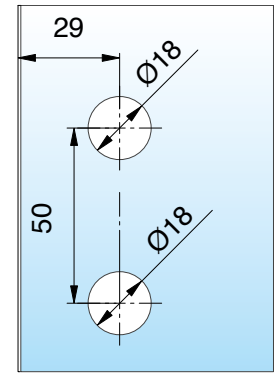

with seal profile 8861KU0-8-2010 (2500), for 8 mm glass

8120ZN glass-wall 90° – opening inwards

MADE IN GERMANY



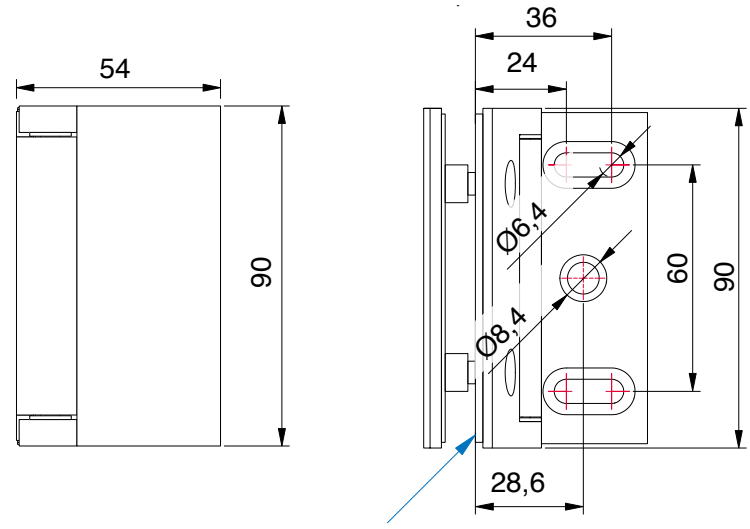

article no.		glass thickness
8120__		6/8/10 mm
finish		
ZN5	gloss chrome	
ZN1	matt chrome	
ZNPVD22	stainless steel optic	
ZN135	deep black matt	

features

opening inwards 90°, wall mount adjustable with the notch, comes with cover plate, full-length sealing profile, concealed screws due to cover plates.
You can request the glass processing for 6 and 10 mm glass from our technical department.

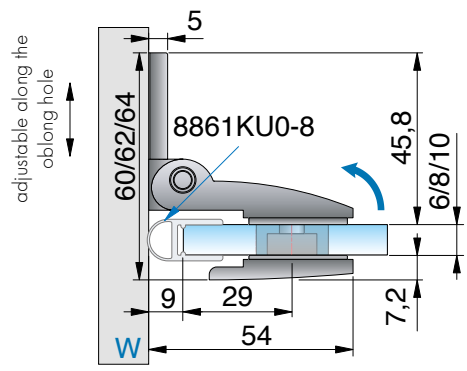

TF

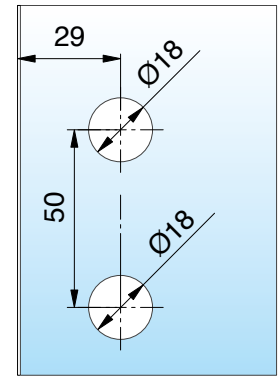

with seal profile 8861KU0-8-2010 (2500), for 8 mm glass

ST = side panel I TF = door panel I W = wall

8122ZN glass-glass 180° – opening outwards

MADE IN GERMANY



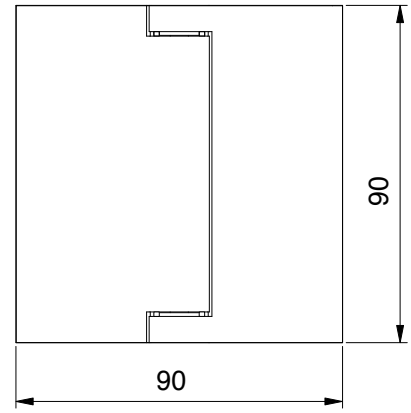

article no.	glass thickness
8122__	6/8/10 mm



finish	
ZN5	gloss chrome
ZN1	matt chrome
ZNPVD22	stainless steel optic
ZN135	deep black matt

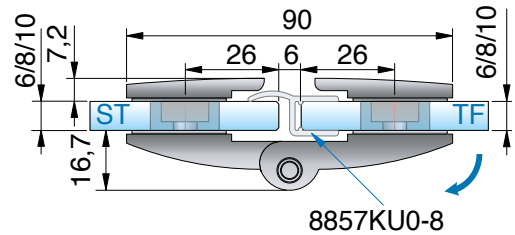

features
opening outwards 180°, full-length sealing profile, concealed screws due to cover plates.
You can request the glass processing for 6 and 10 mm glass from our technical department.

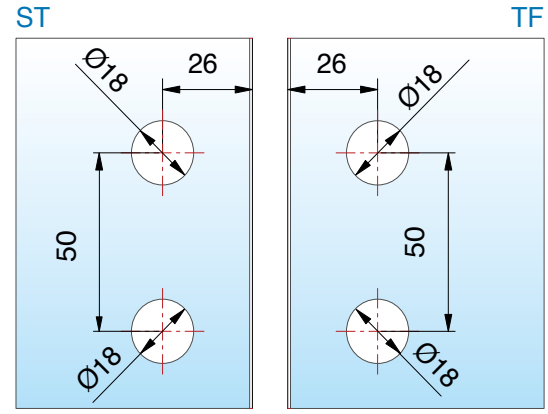

with seal profile 8857KU0-8-2010(2500), for 8 mm glass

8124ZN glass-glas 180° – opening inwards

MADE IN GERMANY



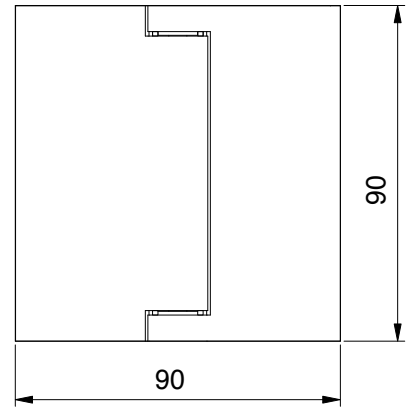

article no.	glass thickness
8124__	6/8/10 mm

finish		
	ZN5	gloss chrome
	ZN1	matt chrome
	ZNPVD22	stainless steel optic
	ZN135	deep black matt

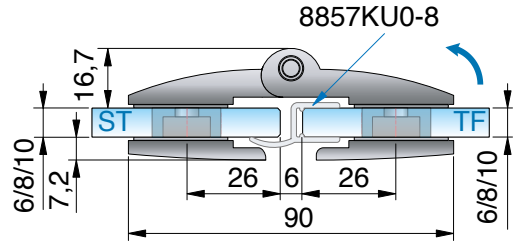

features
opening inwards 180°, full-length sealing profile, concealed screws due to cover plates.
You can request the glass processing for 6 and 10 mm glass from our technical department.

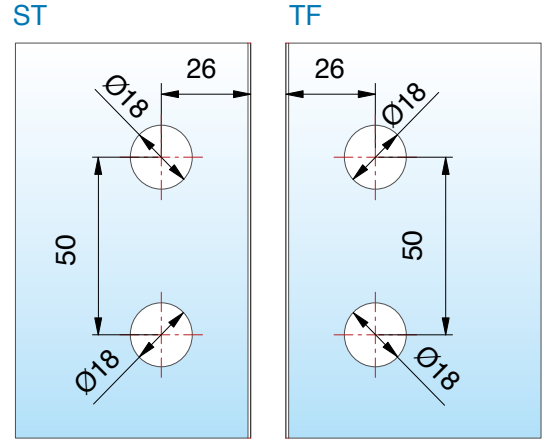

with seal profile 8857KU0-8-2010(2500), for 8 mm glass

ST = side panel I TF = door panel I W = wall

8124ZN glass-glass 90° – opening inwards

MADE IN GERMANY

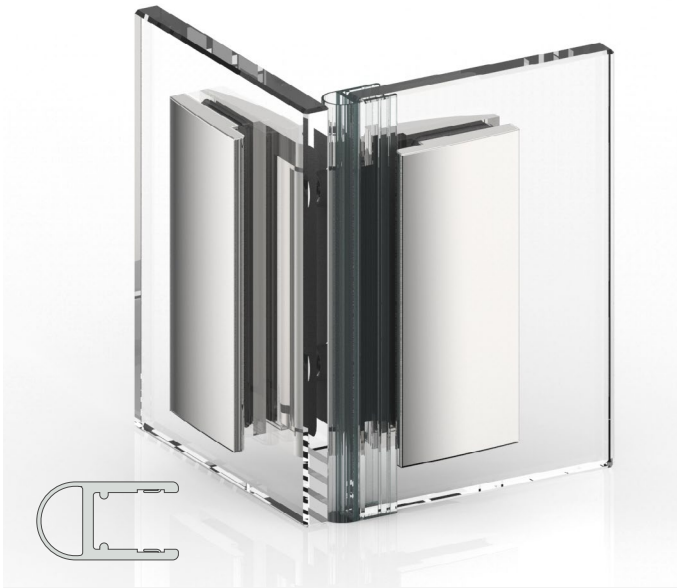

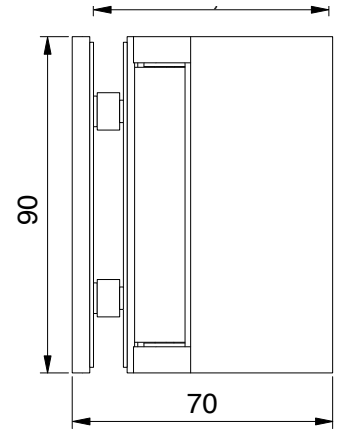

article no.	glass thickness
8124__	6/8/10 mm

finish	
ZN5	gloss chrome
ZN1	matt chrome
ZNPVD22	stainless steel optic
ZN135	deep black matt

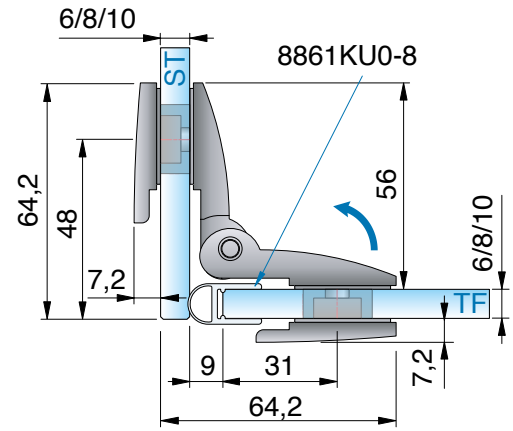

features
opening inwards 90°, full-length sealing profile, concealed screws due to cover plates. You can request the glass processing for 6 and 10 mm glass from our technical department.

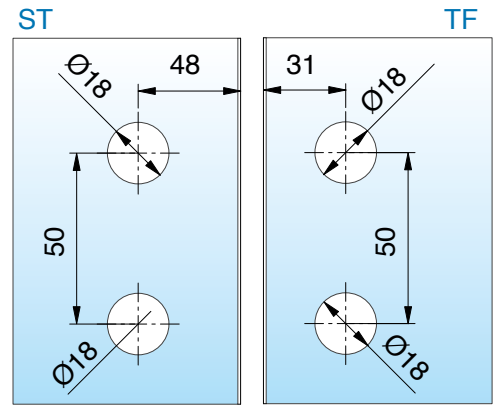

with seal profile 8861KU0-8-2010, for 8 mm glass

8126ZN glass-glas 180° – opening outwards

MADE IN GERMANY



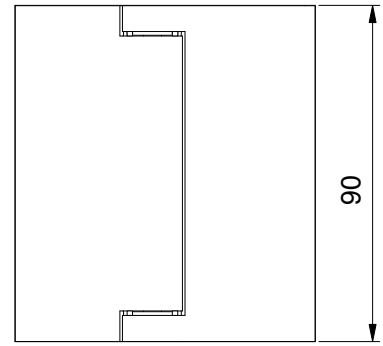

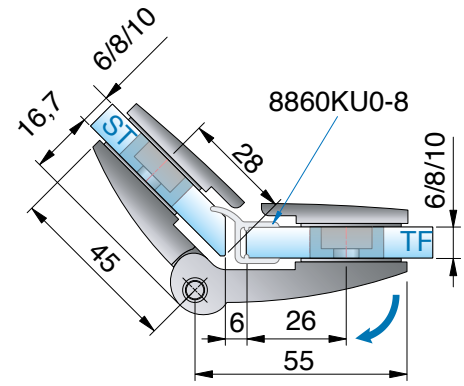

article no.		glass thickness
8126__		6/8/10 mm
finish		
	ZN5	gloss chrome
	ZN1	matt chrome
	ZNPVD22	stainless steel optic
	ZN135	deep black matt



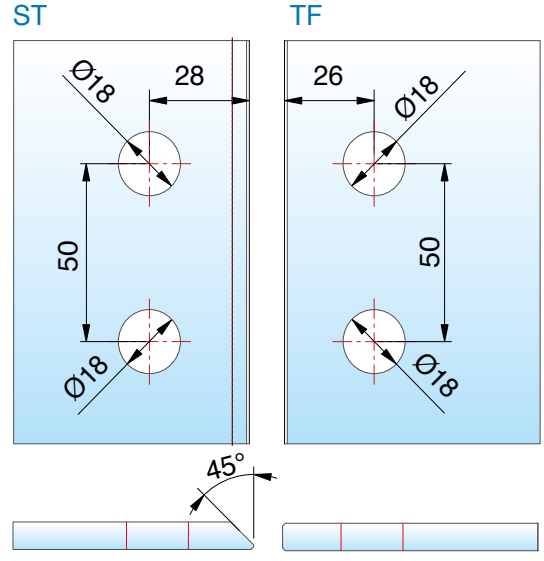

with seal profile 8860KU0-8-2010, for 8 mm glass

features
opening outwards 200°, full-length sealing profile, concealed screws due to cover plates.
You can request the glass processing for 6 and 10 mm glass from our technical department.

ST = side panel I TF = door panel I W = wall

8107ZN Glas-Wand 90°

MADE IN GERMANY



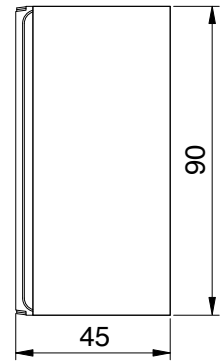

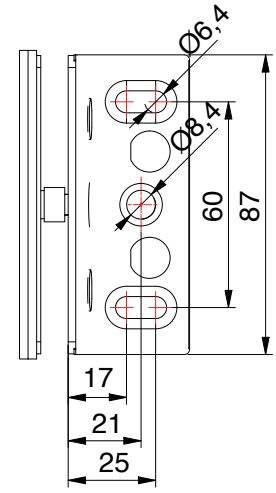

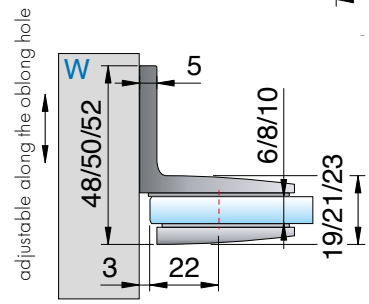

article no.		glass thickness
8107__		6/8/10 mm
finish		
ZN5	gloss chrome	
ZN1	matt chrome	
ZNPVD22	stainless steel optic	
ZN135	deep black matt	

Merkmale
adjustable along the hole and comes with cover plate,

glass processing for 6/8/10 mm glass
hole Ø 20 mm or recess R35



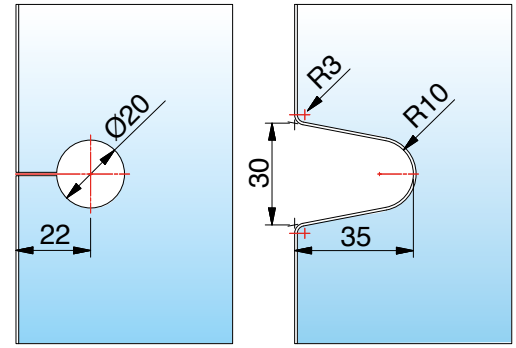

ST = side panel I TF = door panel I W = wall

8110ZN Glas-Wand 180°

MADE IN GERMANY



article no.		glass thickness
8110__		6/8/10 mm
finish		
ZN5	gloss chrome	
ZN1	matt chrome	
ZNPVD22	stainless steel optic	

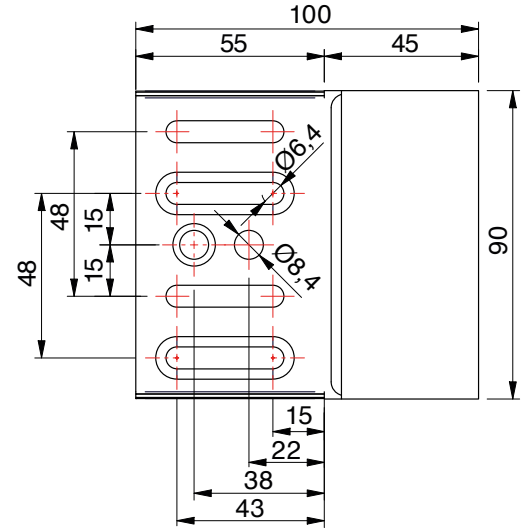

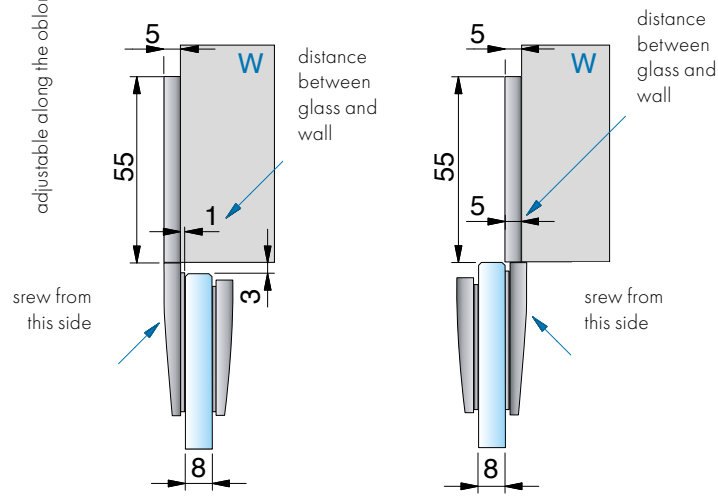

glass processing for 6/8/10 mm glass

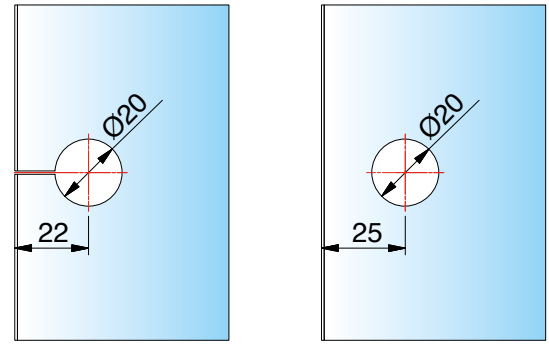

Merkmale
adjustable along the hole

ST = side panel I TF = door panel I W = wall

8109ZN glass-glass 90°

MADE IN GERMANY



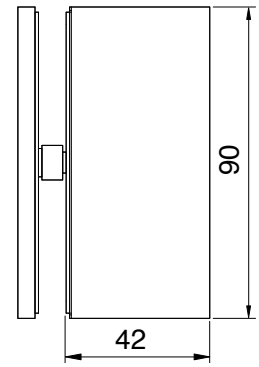

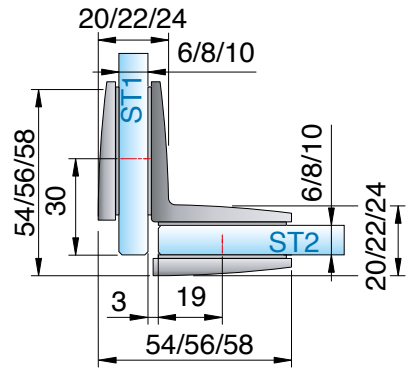

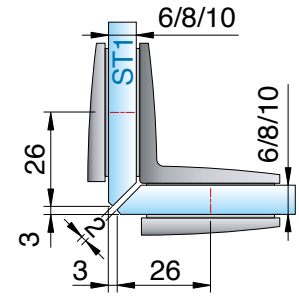

article no.		glass thickness
8109__		6/8/10 mm
finish		
ZN5	gloss chrome	
ZN1	matt chrome	
ZNPVD22	stainless steel optic	
ZN135	deep black matt	

features
concealed screws due to cover plates



ST = side panel I TF = door panel I W = wall

glass processing for 8 mm glass

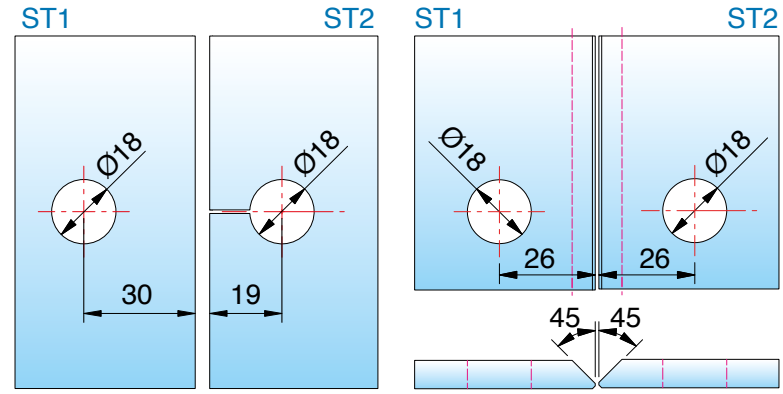

available **surface colors**



ZN5
gloss chrome



ZNPVD22
stainless steel optic



ZN135
deep black matt



ZNPVD40
gold optic brushed



ZNPVD42
graphite metal optic brushed

compatibility chart for fittings manufacturer colors see page 14



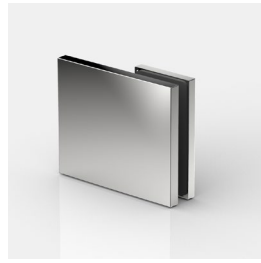

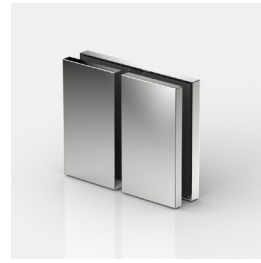



corresponding **angle brackets**

for FLINTER pro (and PONTERE+) can be found on page 72.

MADE IN GERMANY



FLINTER pro

shower door hinge





FLINTER pro – Outstanding technology – elegantly packaged

MADE IN GERMANY

Flinter pro is a versatile and innovative striker hinge. It is suitable for both striker and folding doors in combination with the PONTERE+ swing door hinge.

The height and cover curvature of the Flinter pro are identical to those of the Pontere+, resulting in a pure and elegant overall design. The innovative technical features and sophisticated bearing technique stand for the highest level of technological expertise and durability.

It is the first striker hinge whose geometry allows for a continuous, flush seal in the hinge area or, in the case of the Glass-Wall Hinge 8350ZN with integrated seal within the hinge, provides the best possible sealing to the wall.

- glass thickness: 8/10 mm
- concealed screws with cover caps
- closed-positioning infinitely adjustable
- self-closing over the last few centimeters
- sealing profile discontinued with 8350ZN, with form-fitting seal from within the fitting seals this area towards the wall.
- adjustable along the oblong hole in the wall bracket
- load capacity (2 hinges): 38 kg
  corresponds to a maximum door panel size of 900 x 2000 mm at 8 mm glass thickness.
- the durability of the hardware has been tested internallyaccording to DIN EN 14428:2015 5.5. and TR24

MADE IN GERMANY



8354ZN



8350ZN



8351ZN

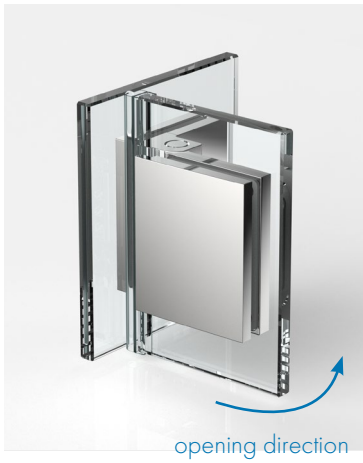

8353ZN



8352ZN

- developed for seals with short glass inserts
- opens outwards to a maximum of 110°
- we recommend magnetic profiles for this application to ensure better locking of the door leaf.
- The innovative closing-position technology is integrated into the hinge body. It enables an adjustable and externally friction-free mechanism. This position can be freely adjusted to any degree, allowing Flinter pro to be used in many different construction situations.
- The innovative cap technology with very narrow gaps covers all screws and offers high suitability for commercial properties, both in terms of secure holding of the caps, good sealing and ease of cleaning.
- In combination with magnetic locking, this hinge can be used to create durable swing doors for private or hotel use.
- The dimensions and elegant design of Flinter pro also fit seamlessly into the Pontere+ series, for example to create high-performance folding systems for confined spaces.

innovative techniques

MADE IN GERMANY





- **new closed-positioning technology** integrated directly into the hinge body
- repeatable adjustment and **friction-free mechanism**



8350ZN



8352ZN

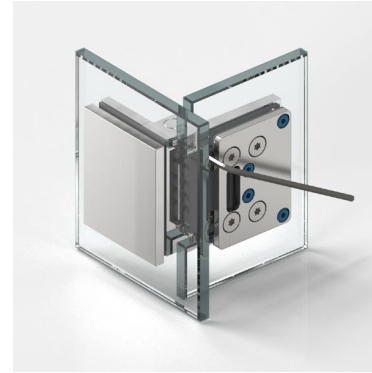

8353ZN

innovative techniques

MADE IN GERMANY





8354ZN



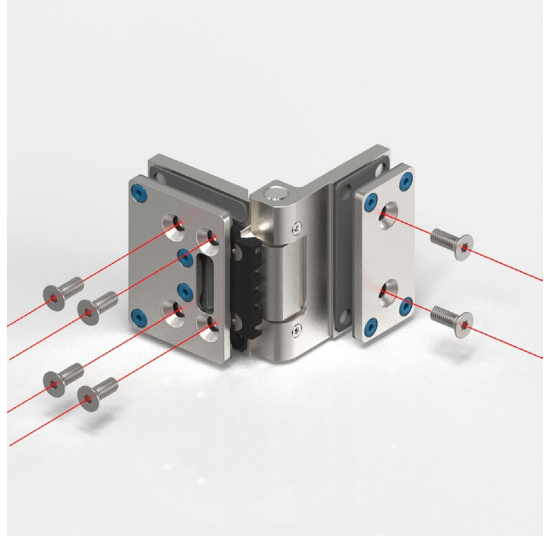

8352ZN

- **intelligently designed:**
  the fitting body and counterplate interlock and are securely fastened with four screws.

Innovative techniques – application of sealing profiles glass wall







- Due to the technology within the shower door hinge, a cutout in the glass is required. Therefore, an inte grated seal on the wall side is included within the hinge. This is supple mented by an attached sealing profile above and below the hinge (8350ZN).

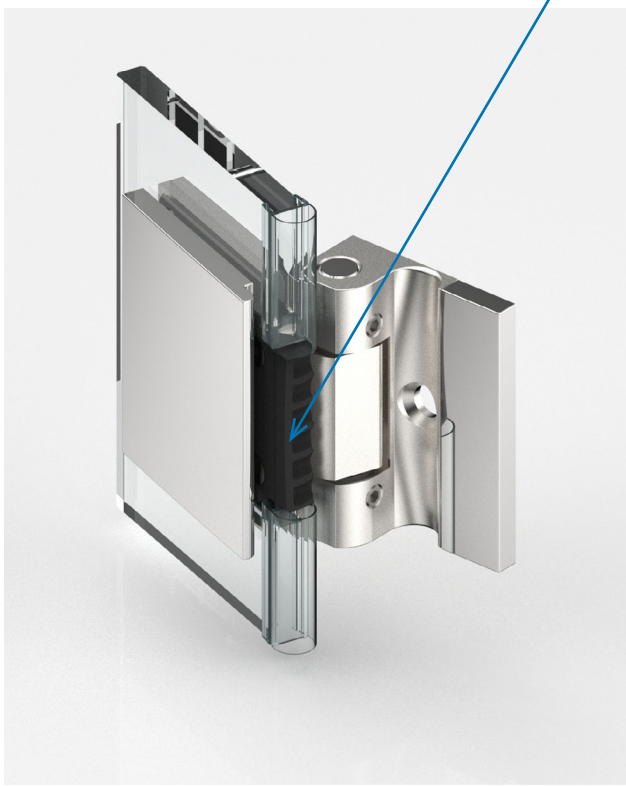

8350ZN

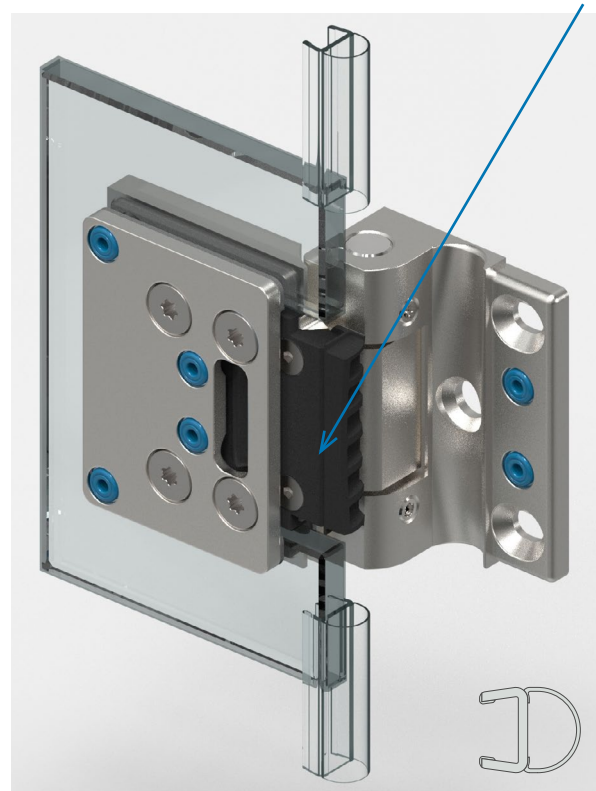

8350ZN

- The sophisticated hinge geometry features an integrated sealing system. This design measure ensures targeted return flow of any splash water into the wet area, there by optimising the tightness of the entire system.

Innovative techniques – application of sealing profiles glass wall



8354ZN

- With the FLINTER pro 8354, you have the option of working conventionally with a continuous seal as usual.
- Due to the integrated seal profile support, the seal is held securely over the entire length and secured against displacement or removal.

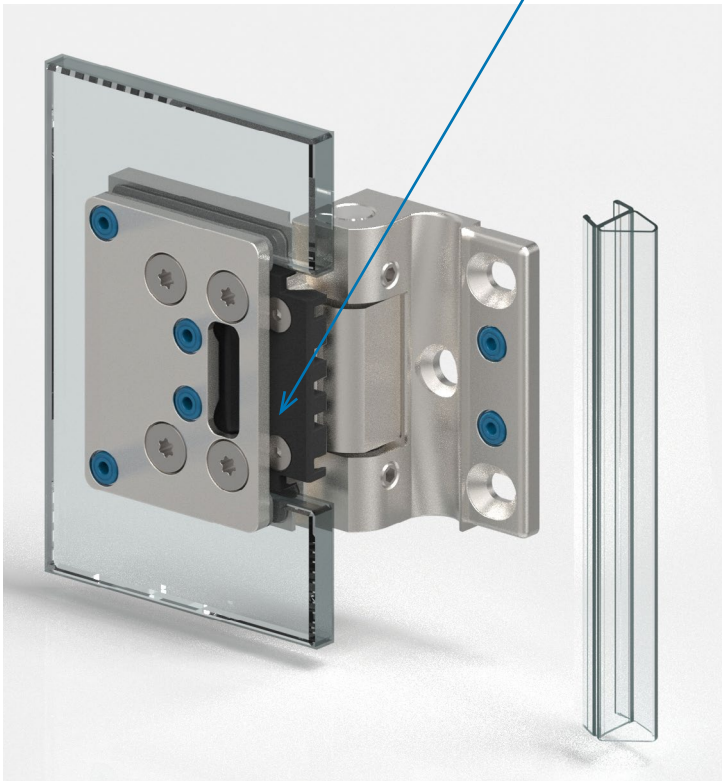

8354ZN



Innovative techniques







8352ZN

- With the FLINTER pro 8352 and 8353, you have the option of working conventionally with a continuous seal as usual.
- Due to the integrated seal profile support, the seal is held securely over the entire length and secured against displacement or removal.



Innovative techniques

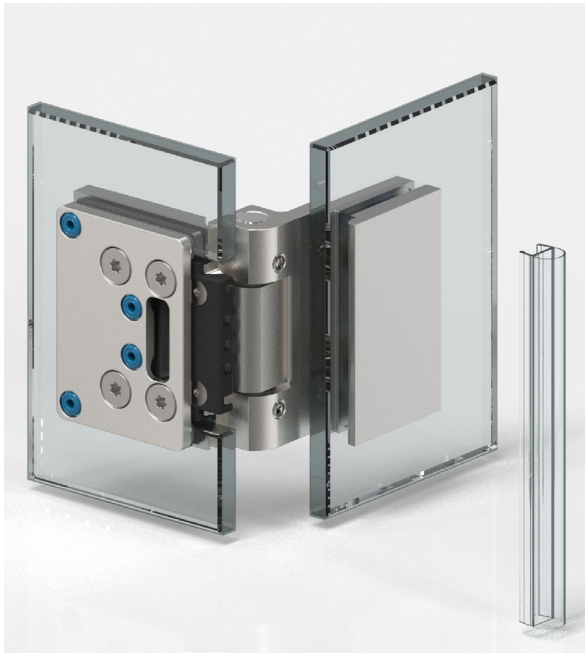



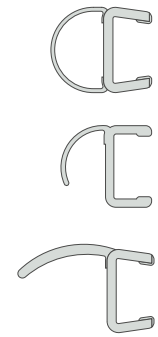

8352ZN

- integrated seal profile support



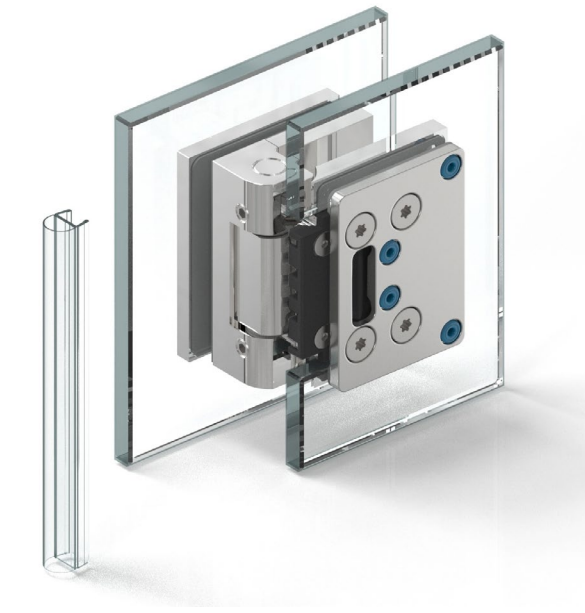

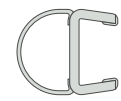

8353ZN

- integrated seal profile support

shower door hinge - FLINTER pro



Illustration shows version in special colour

8350ZN glass-wall 90° (opening outwards)

MADE IN GERMANY



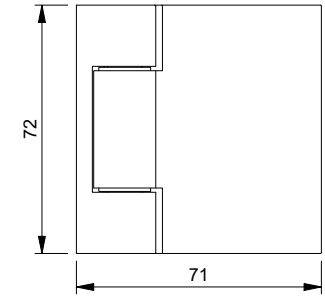

features

Opens 90° outwards to one side, with single-sided bracket, concealed screws with cover cap, max. opening angle 110°, infinitely variable closed-position adjustment, **sealing profile discontinued in the hinge area**, opposite to the striker side, we recommend a sealing profile with magnetic retainer.

With seal profile 8861KU0-8K-2010 (2500), glass processing for 8 mm.

article no.		glass thickness
8350__		8 mm
Oberfläche		
	ZN5	gloss chrome
	ZNPVD22	stainless steel optic
	ZN135	deep black matt
	ZNPVD40	gold optic brushed
	ZNPVD42	graphite metal optic brushed

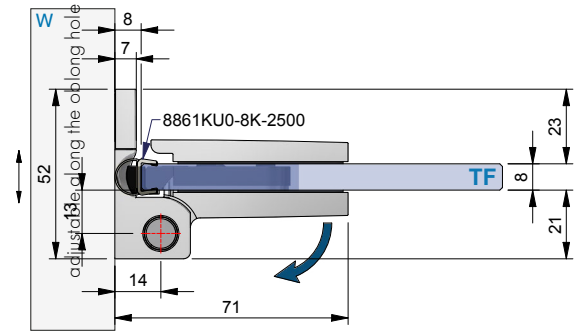



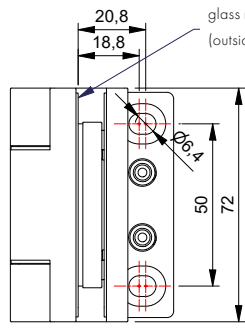

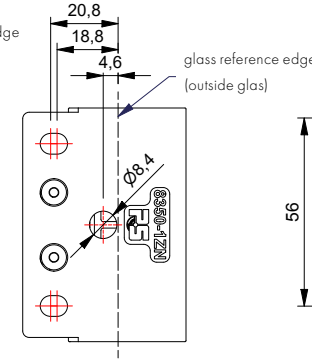

glass processing with sealing profile 8861KUO-8K

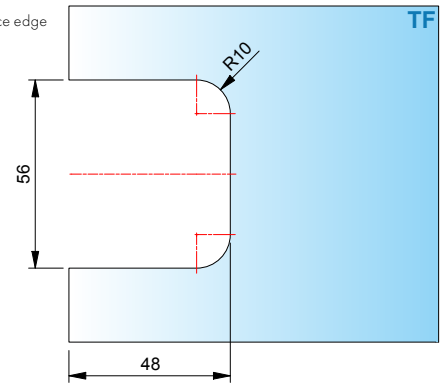

Sealing on the **integrated sealing element** with discontinued seal, sealing element sits further out so that the sealing profile seals properly.

ST = side panel I TF = door panel I W = wall

8354ZN glass-wall 90°

MADE IN GERMANY

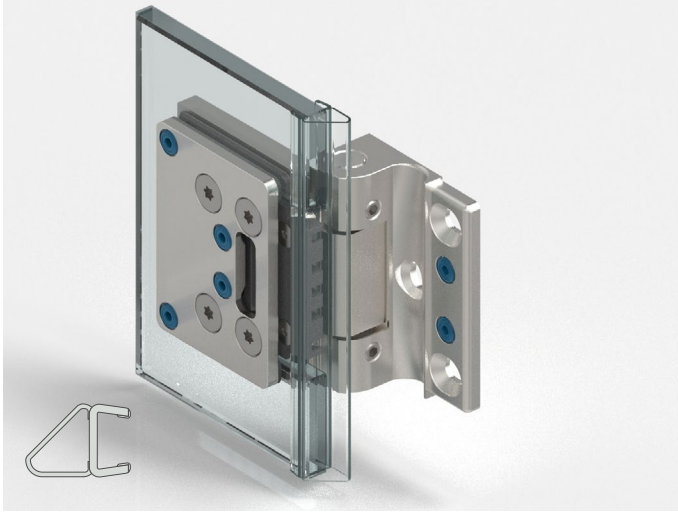

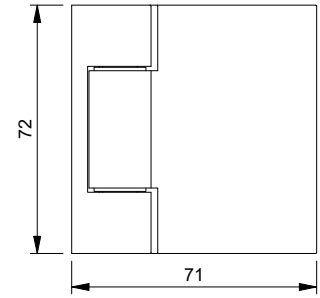

features

Opens 90° outwards to one side, with single-sided bracket, concealed screws with cover cap, max. opening angle 110°, infinitely variable closed-position adjustment, **sealing profile continuous in the hinge area**.

With seal profile 8845KU0-8K-2500, glass processing for 8 mm.

article no.	glass thickness
8354__	8 mm

finish	
ZN5	gloss chrome
ZNPVD22	stainless steel optic
ZN135	deep black matt
ZNPVD40	gold optic brushed
ZNPVD42	graphite metal optic brushed

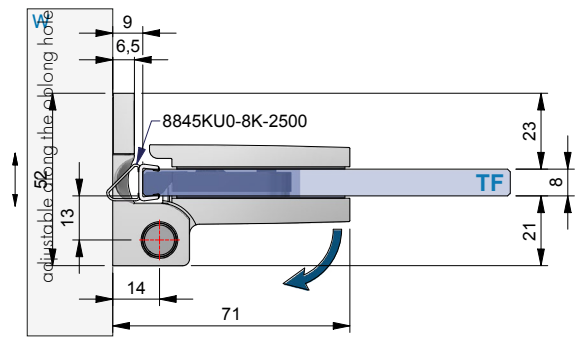

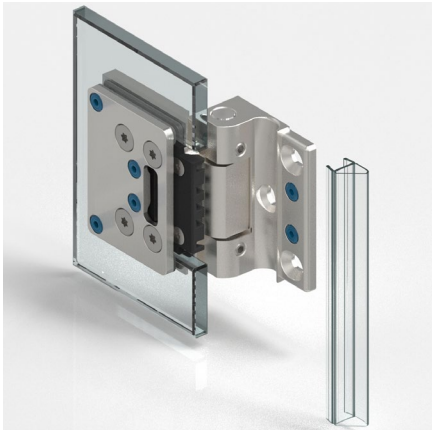

Sealing on the **integrated sealing element** with discontinued seal

ST = side panel I TF = door panel I W = wall

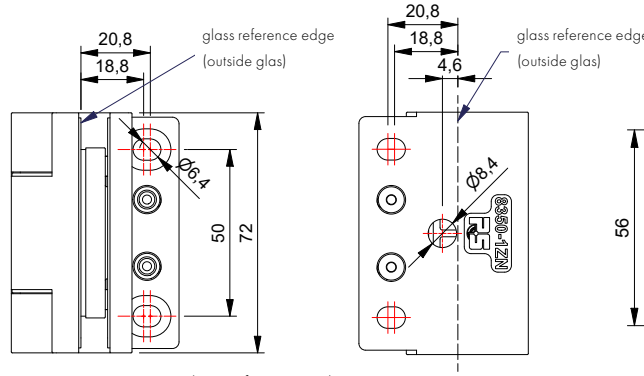

glass processing with sealing profile 8861KUO-8K

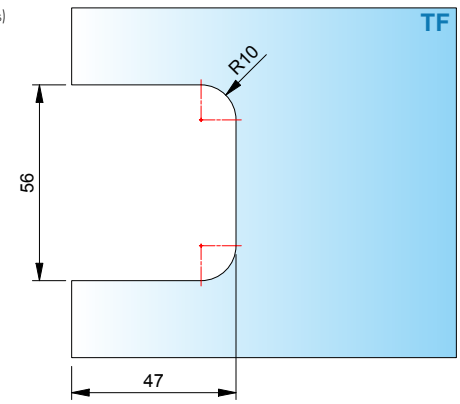

8351ZN glass-wall 90°

MADE IN GERMANY

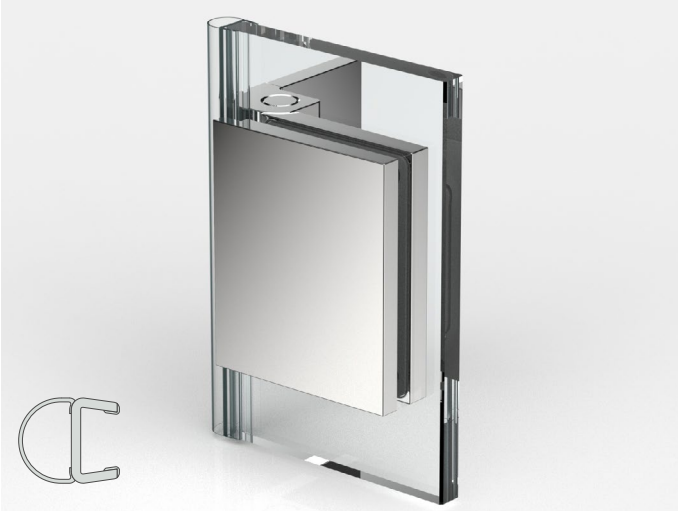

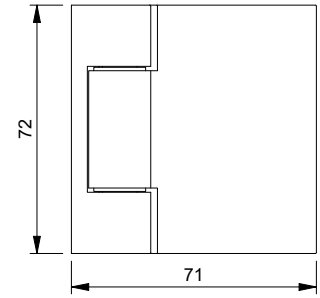

features

90° outwards or inwards to one side (depending on how the hinge is installed) with one-sided bracket, concealed screws with cover cap, max. opening angle 110°, infinitely variable closed-position adjustment, **sealing profile in the hinge area continuous.**

With seal profile 8861KU0-8K-2500, glass processing for 8 mm.

article no.	glass thickness
8351__	8 mm

finish		
	ZN5	gloss chrome
	ZNPVD22	stainless steel optic
	ZN135	deep black matt
	ZNPVD40	gold optic brushed
	ZNPVD42	graphite metal optic brushed

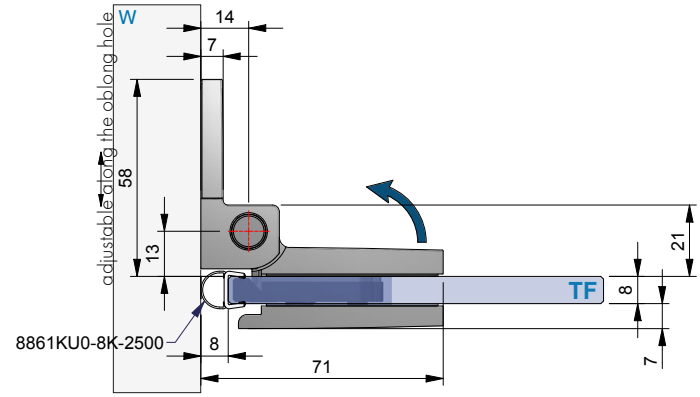

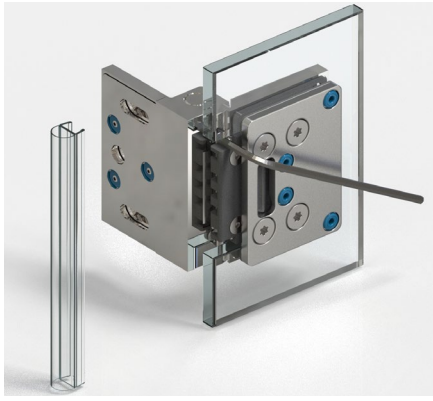

Sealing on the **integrated sealing element** with discontinued seal

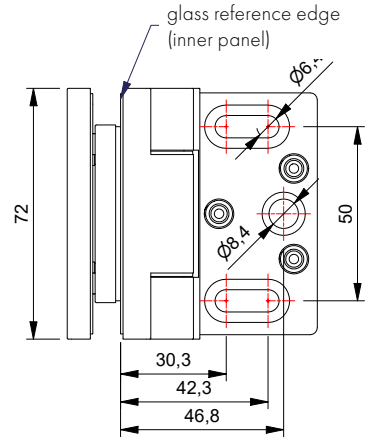

glass processing with sealing profile 8861KUO-8K

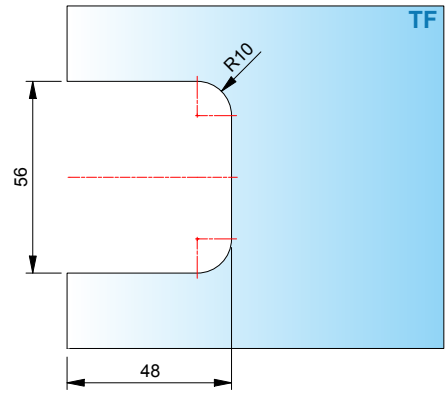

ST = side panel I TF = door panel I W = wall

FLINTER PRO



8353ZN glass-wall 90°

MADE IN GERMANY



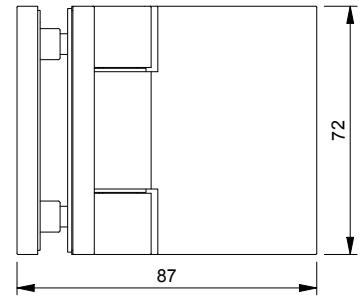

features

90° outwards or inwards to one side (depending on how the hinge is installed), concealed screws with cover cap, max. opening angle 106°, infinitely variable closed-position adjustment, **sealing profile in the hinge area continuous**.

With seal profile 8861KU0-8K-2010 (2500), glass processing for 8 mm.

article no.	glass thickness
8350__	8 mm

Oberfläche	
ZN5	gloss chrome
ZNPVD22	stainless steel optic
ZN135	deep black matt
ZNPVD40	gold optic brushed
ZNPVD42	graphite metal optic brushed

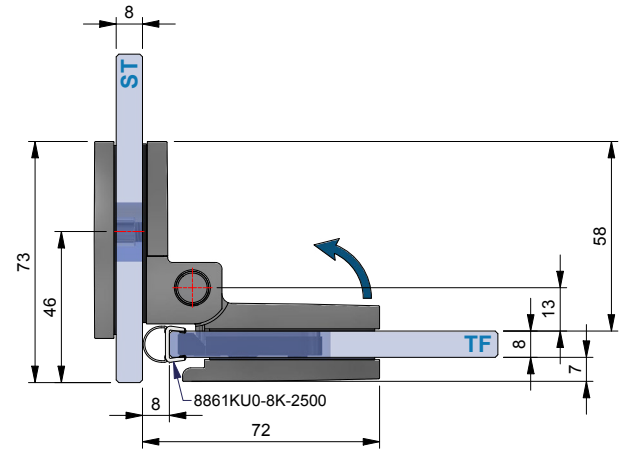

glass processing with sealing profile 8861KUO-8K

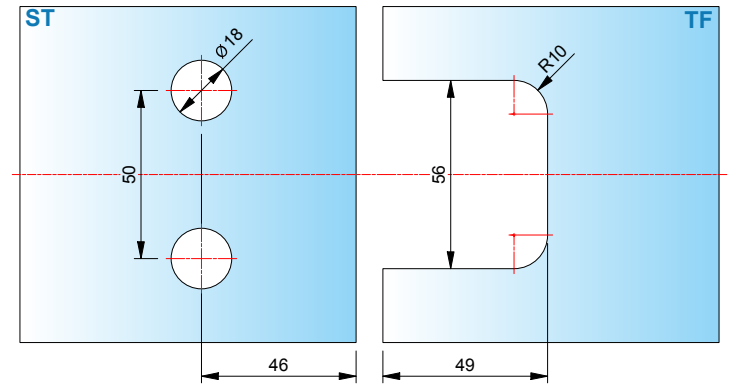

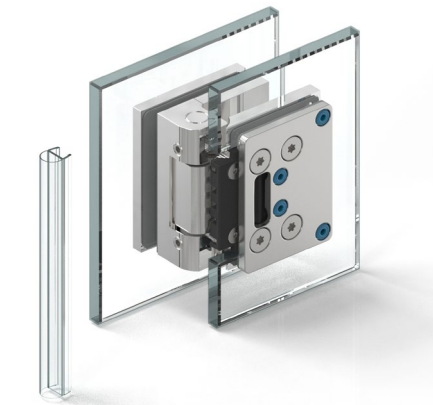

Sealing on the **integrated sealing element** with discontinued seal

ST = side panel I TF = door panel I W = wall

FLINTER PRO

8352ZN glass-glass 180°

MADE IN GERMANY



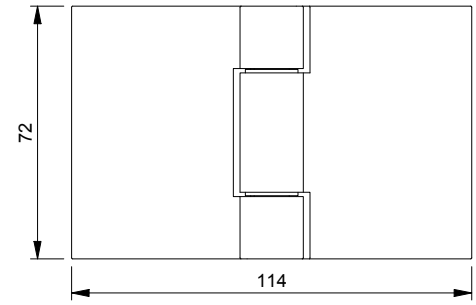

features
90° outwards or inwards to one side (depending on how the hinge is installed), concealed screws with cover cap, max. opening angle 191°, infinitely variable closed-position adjustment, **sealing profile in the hinge area continuous**.

With seal profile 8861KU0-8K-2500, glass processing for 8 mm.

article no.	glass thickness
8352__	8 mm

finish	
ZN5	gloss chrome
ZNPVD22	stainless steel optic
ZN135	deep black matt
ZNPVD40	gold optic brushed
ZNPVD42	graphite metal optic brushed

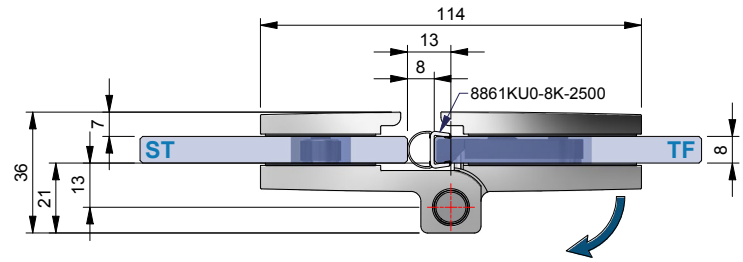

glass processing with sealing profile 8861KUO-8K-2500

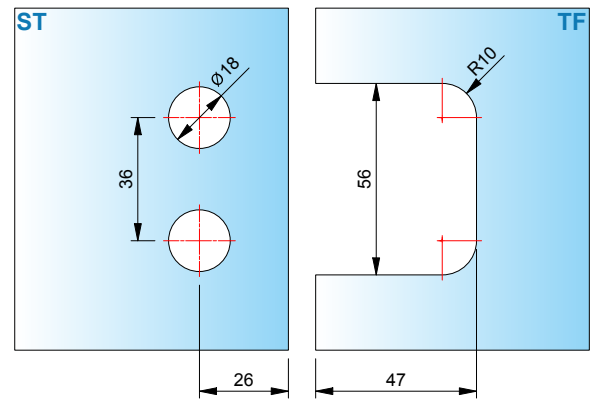



Sealing on the **integrated sealing element** with discontinued seal

ST = side panel I TF = door panel I W = wall

FLINTER PRO

8352ZN glass-glass 180°

MADE IN GERMANY



with seal profile 8865KU0-8K-2500, glass processing for 8 mm

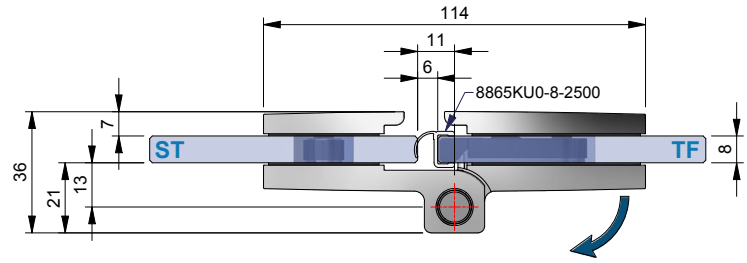

glass processing with sealing profile 8865KUO-8K-2500

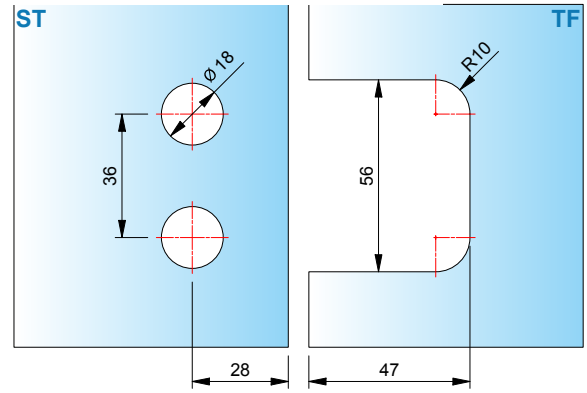



with seal profile 8857KU0-8K-2500, glass processing for 8 mm

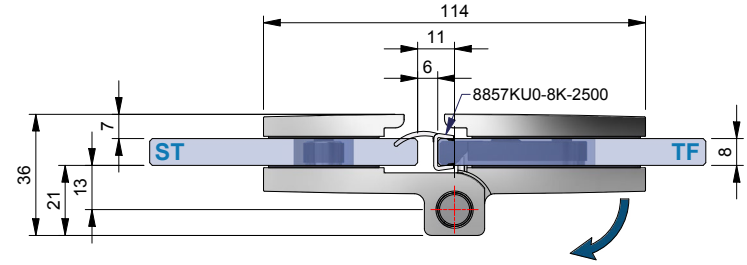

glass processing with sealing profile 8857KUO-8K-2500

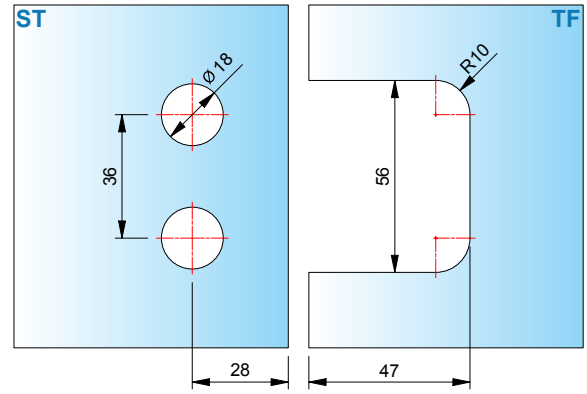

ST = side panel I TF = door panel I W = wall

FLINTER PRO

Folding systems combination PONTERE+ and FLINTER-pro

MADE IN GERMANY

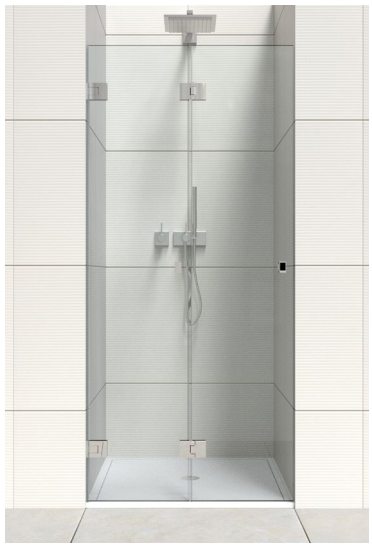

Load capacity for system width
1200 mm: 45 kg
corresponds to a door height of
1900 mm with 8 mm glass

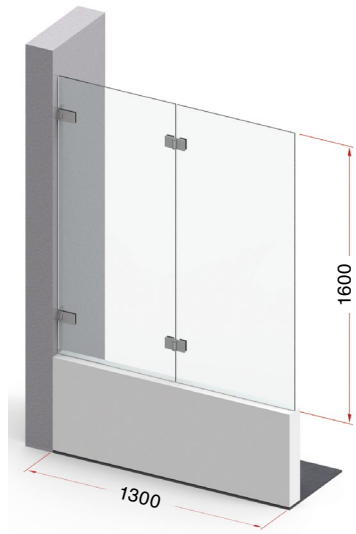

Load capacity for system width
1300 mm: 42 kg
corresponds to a door height of
1600 mm with 8 mm glass

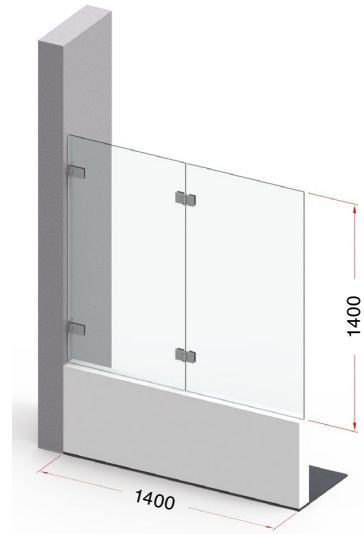

Load capacity for system width
1400 mm: 39 kg
corresponds to a door height of
1400 mm with 8 mm glass

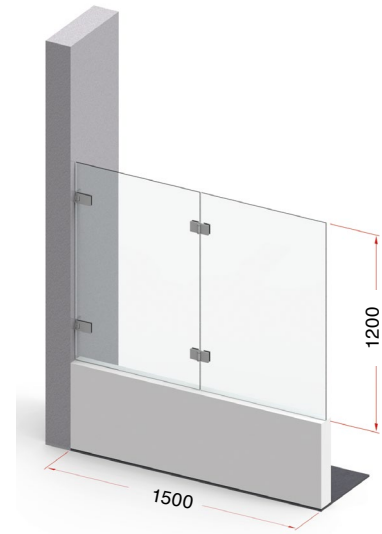

Load capacity for system width
1500 mm: 36 kg
corresponds to a door height of
1200 mm with 8 mm glass



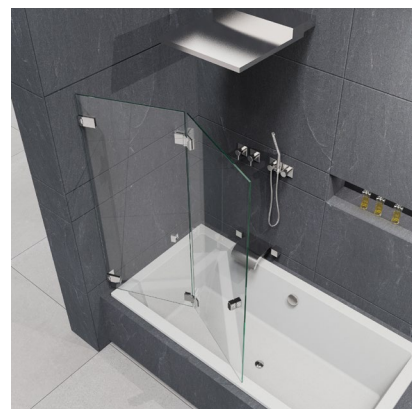

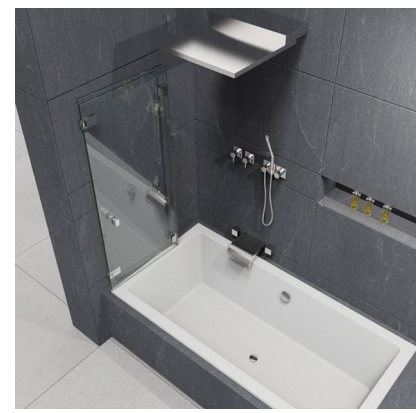

Folding systems combination PONTERE+ and FLINTER-pro

MADE IN GERMANY


8314ZN


8352ZN



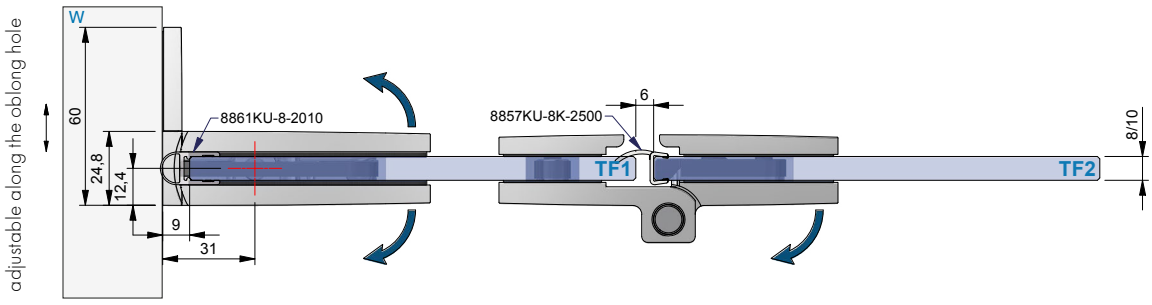

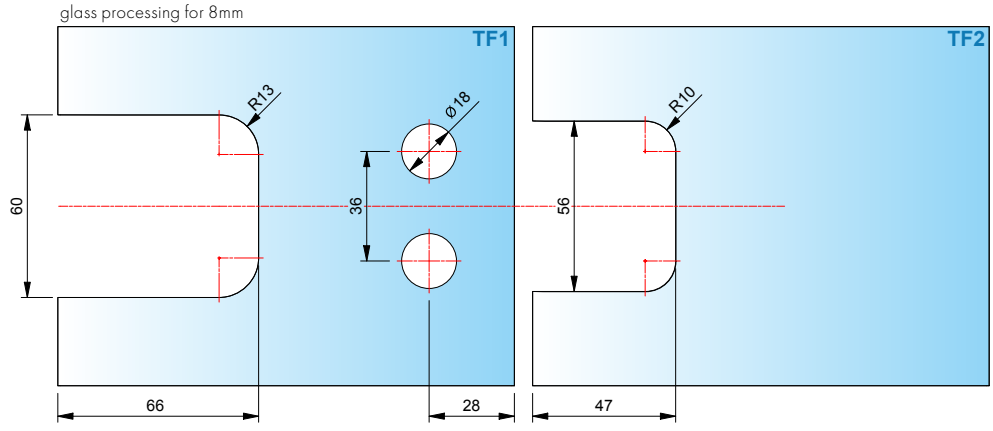

- Glass processing for 8 mm
- Recommended sealing profiles for folding systems: 8861KU0-8 and 8861KU0-8K

dimensions Folding systems combination PONTERE+ and FLINTER-pro – glass-wall

MADE IN GERMANY

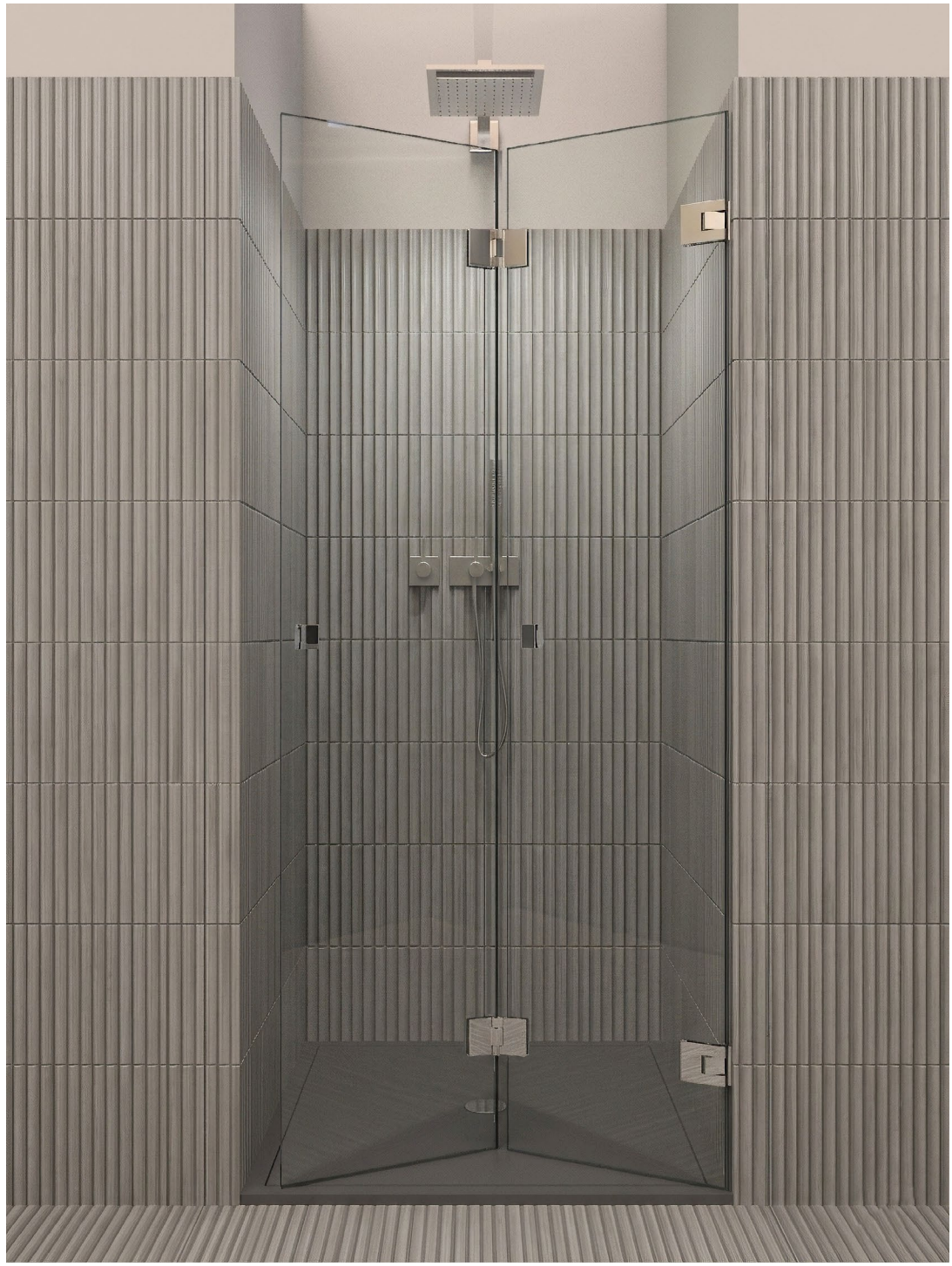

dimensions Folding systems combination PONTERE+ and FLINTER-pro – glass-wall

MADE IN GERMANY

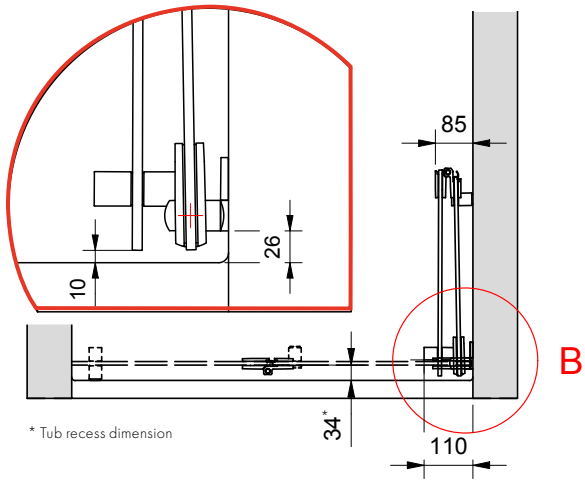

Folding system 1: 8314ZN without sealing profile and 8352ZN with sealing profile 8861KU0-8K

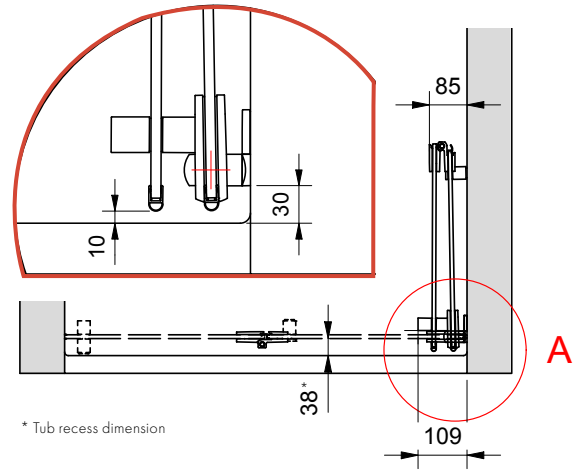

Folding system 2: 8314ZN with sealing profile 8861KU0-8 and 8352ZN with sealing profile 8861KU0-8K





- We recommend the sealing profile 8865KU0 (KU35) for folding doors.

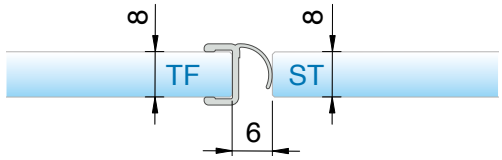

or 8857KU0-8K (KU35)

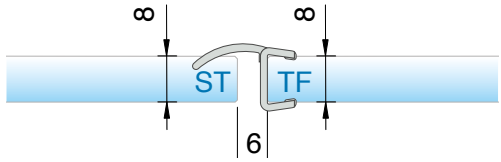

The deduction dimension of the seal applies to 8 mm glass. For 6 or 10 mm glass, please contact our application engineering department.

Borehole spacing for:



8273ZN



8271ZN

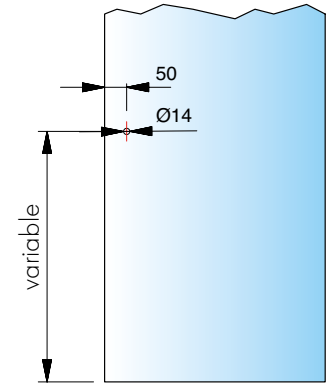

- Further information on handles 8271 and 8273 can be found on page 509.

dimensions Folding systems combination PONTERE+ and FLINTER-pro – glass-glass

MADE IN GERMANY



Illustration shows version in special colour

dimensions Folding systems combination PONTERE+ and FLINTER-pro – glass-glass

MADE IN GERMANY

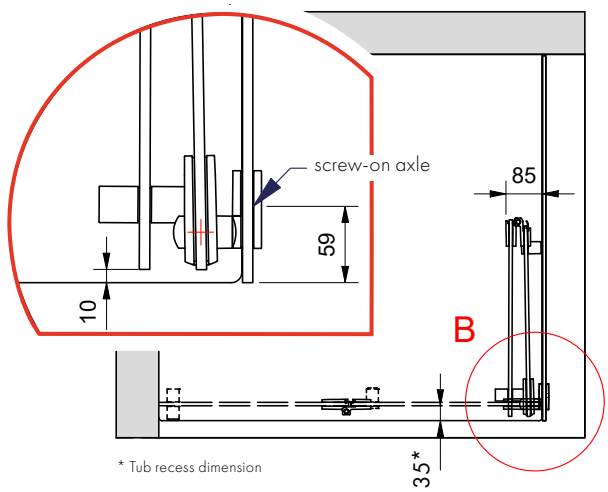

Folding system 3: 8314ZN without sealing profile and 8352ZN with sealing profile 8861KU0-8K

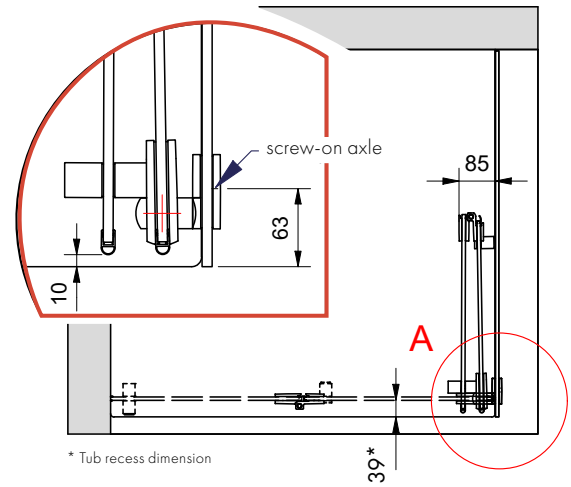

Folding system 4: 8314ZN with sealing profile 8861KU0-8 and 8352ZN with sealing profile 8861KU0-8K





available **surface colors**



ZN5
gloss chrome

compatibility chart for fittings manufacturer colors see page 14







corresponding **angle brackets**

for FLINTER can be found on page 346.

MADE
IN
GERMANY



FLINTER

shower door hinge



FLINTER – great, small

MADE IN GERMANY

FLINTER unfolds its full power in bathtubs and folding systems. The spring technology ensures a firm snap-in function of the door panel. Depending on size and weight and type of the door stop, you have the choice between 0 and 3 springs. For folding systems we recommend the combination with FLAMEA^{+} as a wall fixture. This allows the door panel while cleaning to be opened optimally to the outside. Incorrect operation is impossible!

- concealed screws due to cover plates
- self-closing during the last 15 - 20°
- full-length sealing profile on the hinge side
- adjustable closed position (snap-in at the closed position)
- very flat counterplates
- oblong hole adjustment in the wall mount
- glass thickness: 6, 8 and 10 mm
- loading capacity (2 hinges): 36 kg
  corresponds to a maximum glass door size of 900 x 2000 mm with a glass thickness of 8 mm
- the durability of the hardware has been tested internally according to DIN EN 14428:2015 5.5











8162ZN



8900ZN



8130ZN

application with FLINTER (8162ZN) and the swing door hinge FARDELLO (8900ZN) or FLAMEA+ (8130ZN):

- this avoids any mistakes while opening the door outwards.
- the door panel can be cleaned outside the shower.
- for the maximum glass dimensions, please refer to the overview on page 143.
- Bei der Anwendung als Faltwand mit den Beschlägen „Glas-Glas 180°nach außen öffnend" (8162ZN) und „Glas-Wand 90° nach innen öffnend" (8150ZN) richten sich diese in der Nähe der Nulllage selbsttätig aus.

General note

- due to the system, a superficial matting may occur in the area of the rollers on the visible surface due to micro-scratches. We recommend regular cleaning in accordance with our care instructions on p. 647 to prevent deposits from forming in the area of the pressure rollers.

recommended number of springs for doors using FLINTER

- hinges with 1 spring for lightweight doors
- hinges with 2 springs for mediumweight doors
- hinges with 4 springs for heavyweight doors
- door is too heavy

			door width									
			450 mm	500 mm	550 mm	600 mm	650 mm	700 mm	750 mm	800 mm	850 mm	900 mm
door heigth	6 mm	1600 mm	10,8 kg	12,0 kg	13,2 kg	14,4 kg	15,6 kg	16,8 kg	18,0 kg	19,2 kg	20,4 kg	21,6 kg
		1700 mm	11,5 kg	12,8 kg	14,0 kg	15,3 kg	16,6 kg	17,9 kg	19,1 kg	20,4 kg	21,7 kg	23,0 kg
		1800 mm	12,2 kg	13,5 kg	14,9 kg	16,2 kg	17,6 kg	18,9 kg	20,3 kg	21,6 kg	23,0 kg	24,3 kg
		1900 mm	12,8 kg	14,3 kg	15,7 kg	17,1 kg	18,5 kg	20,0 kg	21,4 kg	22,8 kg	24,2 kg	25,7 kg
		2000 mm	13,5 kg	15,0 kg	16,5 kg	18,0 kg	19,5 kg	21,0 kg	22,5 kg	24,0 kg	25,5 kg	27,0 kg
		2100 mm	14,2 kg	15,8 kg	17,3 kg	18,9 kg	20,5 kg	22,1 kg	23,6 kg	25,2 kg	26,8 kg	28,4 kg
	8 mm	1600 mm	14,4 kg	16,0 kg	17,6 kg	19,2 kg	20,8 kg	22,4 kg	24,0 kg	25,6 kg	27,2 kg	28,8 kg
		1700 mm	15,3 kg	17,0 kg	18,7 kg	20,4 kg	22,1 kg	23,8 kg	25,5 kg	27,2 kg	28,9 kg	30,6 kg
		1800 mm	16,2 kg	18,0 kg	19,8 kg	21,6 kg	23,4 kg	25,2 kg	27,0 kg	28,8 kg	30,6 kg	32,4 kg
		1900 mm	17,1 kg	19,0 kg	20,9 kg	22,8 kg	24,7 kg	26,6 kg	28,5 kg	30,4 kg	32,3 kg	34,2 kg
		2000 mm	18,0 kg	20,0 kg	22,0 kg	24,0 kg	26,0 kg	28,0 kg	30,0 kg	32,0 kg	34,0 kg	36,0 kg
		2100 mm	18,9 kg	21,0 kg	23,1 kg	25,2 kg	27,3 kg	29,4 kg	31,5 kg	33,6 kg	35,7 kg	37,8 kg
	10 mm	1600 mm	18,0 kg	20,0 kg	22,0 kg	24,0 kg	26,0 kg	28,0 kg	30,0 kg	32,0 kg	34,0 kg	36,0 kg
		1700 mm	19,1 kg	21,3 kg	23,4 kg	25,5 kg	27,6 kg	29,8 kg	31,9 kg	34,0 kg	36,1 kg	38,3 kg
		1800 mm	20,3 kg	22,5 kg	24,8 kg	27,0 kg	29,3 kg	31,5 kg	33,8 kg	36,0 kg	38,3 kg	40,5 kg
		1900 mm	21,4 kg	23,8 kg	26,1 kg	28,5 kg	30,9 kg	33,3 kg	35,6 kg	38,0 kg	40,4 kg	42,8 kg
		2000 mm	22,5 kg	25,0 kg	27,5 kg	30,0 kg	32,5 kg	35,0 kg	37,5 kg	40,0 kg	42,5 kg	45,0 kg
		2100 mm	23,6 kg	26,3 kg	28,9 kg	31,5 kg	34,1 kg	36,8 kg	39,4 kg	42,0 kg	44,6 kg	47,3 kg

recommended number of springs for doors using FLINTER

MADE IN GERMANY

The spring technology of the FLINTER shower door hinge allows you to determine how strong the closing force of your door should be yourself. In the chart on page 270, you can find the recommendations of Pauli + Sohn on the optimal closing force of the hinges in relation to the size of the door. Please always include this in your order.



spring technology - 1 spring



spring technology - 2 springs



spring technology - 3 springs

for door panel sizes up to a maximum of 900 mm:



2-panels = 1 spring



1-door panel/1-side panel = 2 springs



1-panel = 3 springs

8150ZN glass-wall 90° (opening inwards)

MADE IN GERMANY



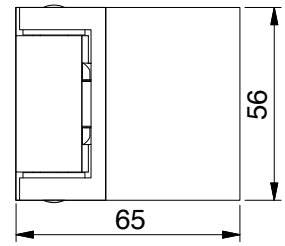

	glass thickness
	6/8/10 mm
article no.	springs technology
8150__	with 3 springs
8150__-2F	with 2 springs
8150__-1F	with 1 spring
8150__-0F	without springs
Oberfläche	
ZN5	gloss chrome

features

one-sided opening inwards 90°, with one-sided bracket, concealed screws due to cover plates

*You can request the glass processing for 6 or 10 mm glass from our technical department.

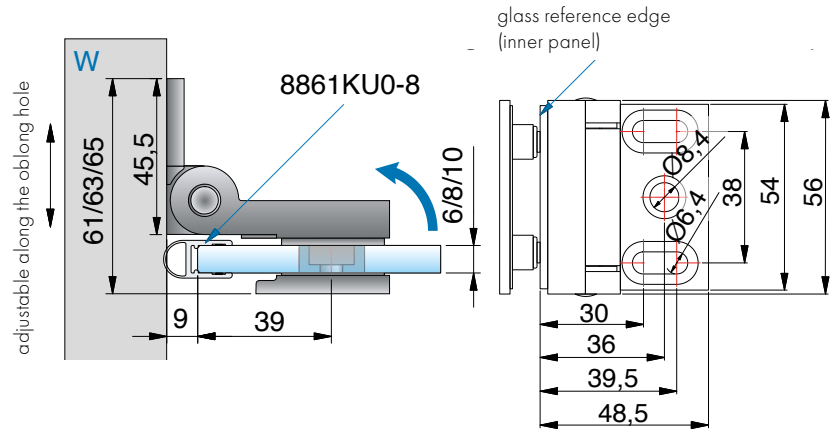

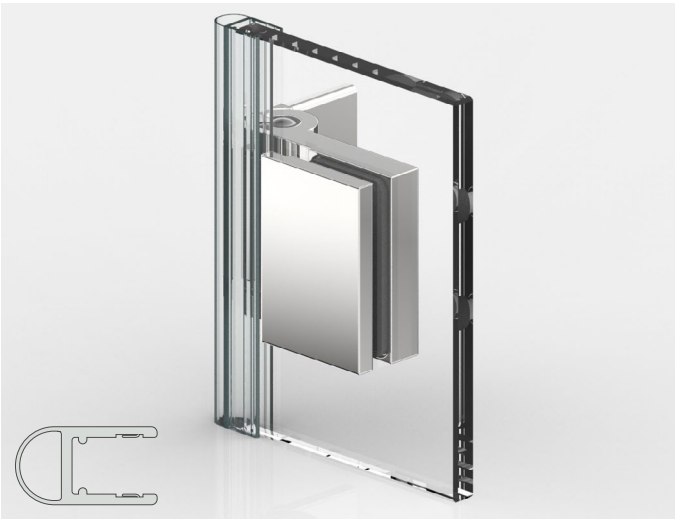

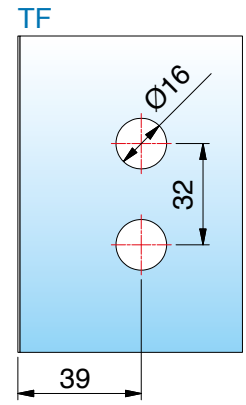

with seal profile 8861KU0-8-2010 (2500), *glass processing for 8 mm

ST = side panel I TF = door panel I W = wall

8152ZN glass-wall 90° (opening outwards)

MADE IN GERMANY



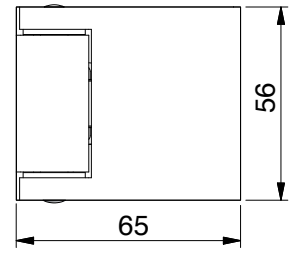

	glass thickness
	6/8/10 mm
article no.	springs technology
8152__	with 3 springs
8152__-2F	with 2 springs
8152__-1F	with 1 spring
8152__-0F	without springs



Oberfläche	
ZN5	gloss chrome

features

one-sided opening outwards 90°, with one-sided bracket, concealed screws due to cover plates

*You can request the glass processing for 6 or 10 mm glass from our technical department.

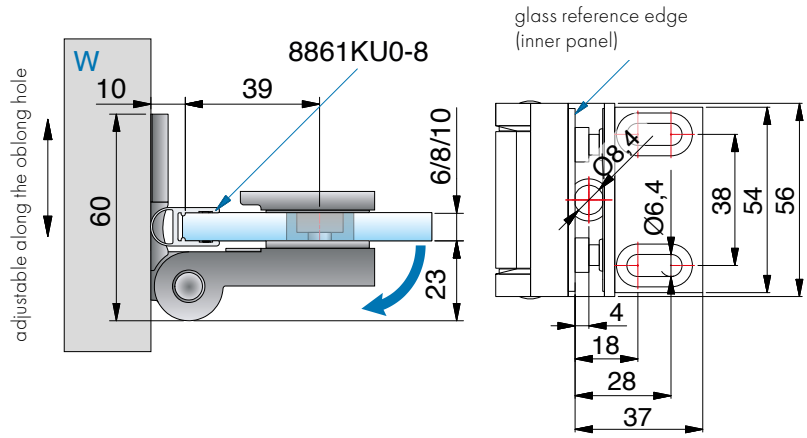

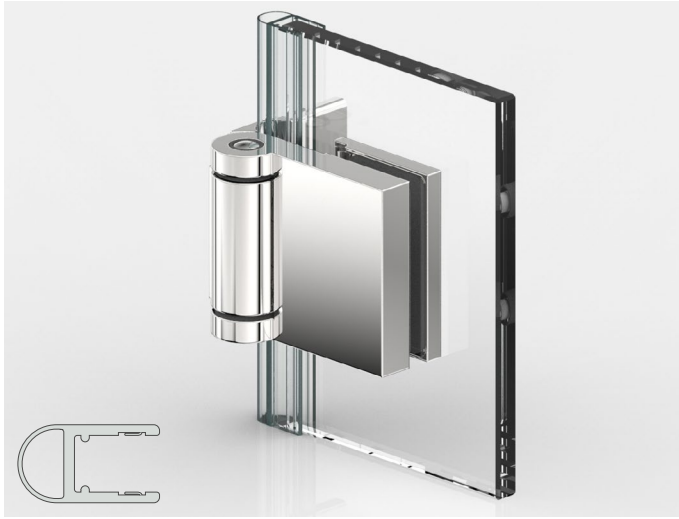

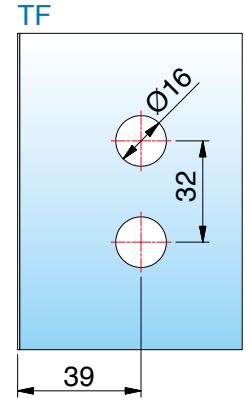

with seal profile 8861KU0-8-2010 (2500), *glass processing for 8 mm

ST = side panel I TF = door panel I W = wall

FLINTER

8154ZN glass-wall 90° (opening outwards)

MADE IN GERMANY



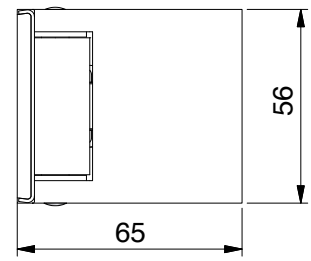

	glass thickness
	6/8/10 mm
article no.	springs technology
8154__	with 3 springs
8154__-2F	with 2 springs
8154__-1F	with 1 spring
8154__-0F	without springs
Oberfläche	
ZN5	gloss chrome

features

one-sided opening inwards 90°, with one-sided bracket, concealed screws due to cover plates

*You can request the glass processing for 6 or 10 mm glass from our technical department.

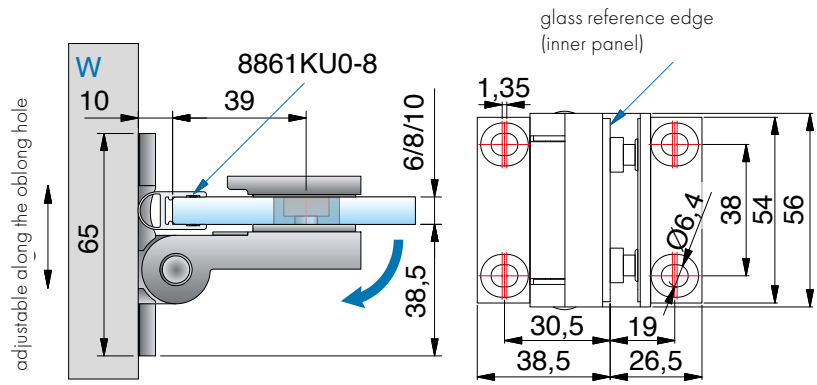

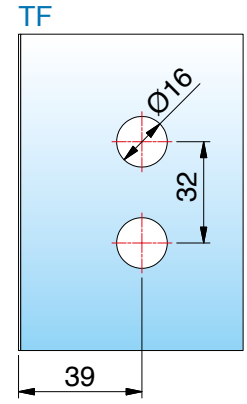



with seal profile 8861KU0-8-2010 (2500), *glass processing for 8 mm

ST = side panel I TF = door panel I W = wall

8158ZN glass-wall 90° (opening outwards)

MADE IN GERMANY



	glass thickness	
	6/8/10 mm	
article no.	springs technology	
8158__	with 3 springs	
8158__-2F	with 2 springs	
8158__-1F	with 1 spring	
8158__-0F	without springs	
Oberfläche		
ZN5	gloss chrome	

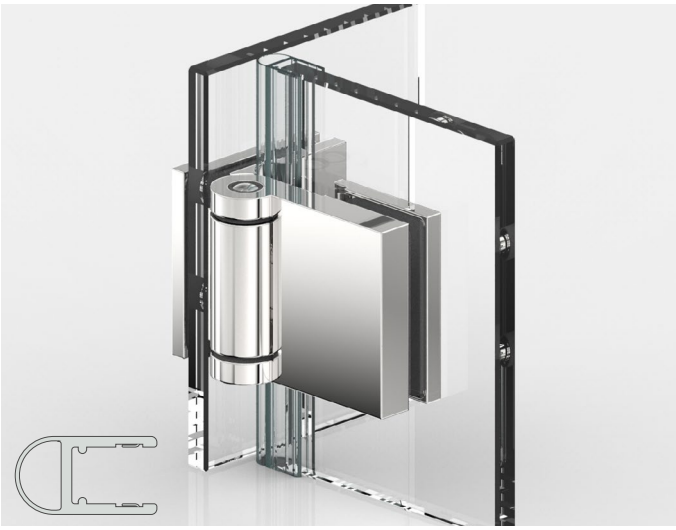

with seal profile 8861KU0-8-2010 (2500), *glass processing for 8 mm

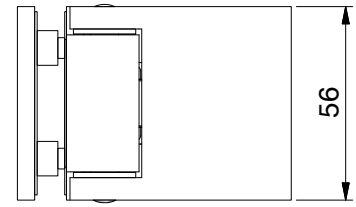

features

one-sided opening outwards 90°, with one-sided bracket, concealed screws due to cover plates

*You can request the glass processing for 6 or 10 mm glass from our technical department.

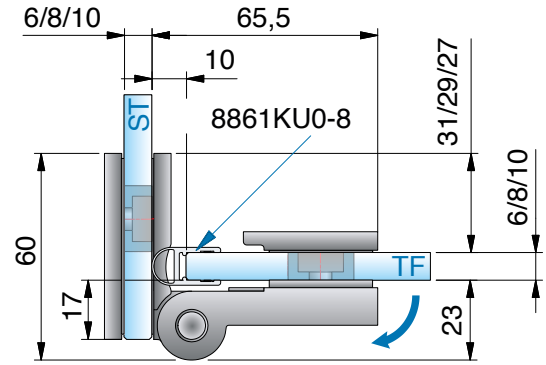

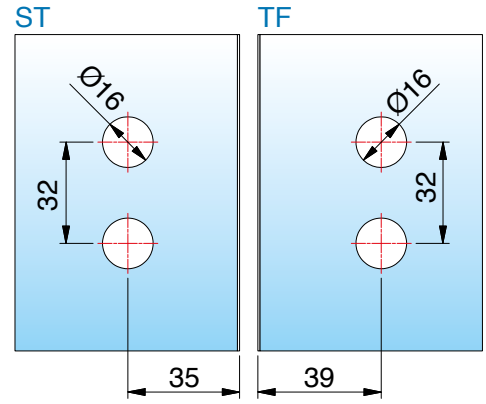

ST = side panel I TF = door panel I W = wall

8160ZN glass-glass 180° (opening inwards)

MADE IN GERMANY



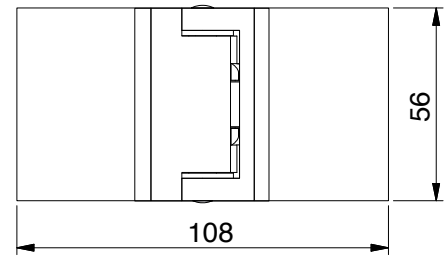

	glass thickness
	6/8/10 mm
article no.	springs technology
8160__	with 3 springs
8160__-2F	with 2 springs
8160__-1F	with 1 spring
8160__-0F	without springs
Oberfläche	
ZN5	gloss chrome

features
one-sided opening inwards 180°, concealed screws due to cover plates
*You can request the glass processing for 6 or 10 mm glass from our technical department.

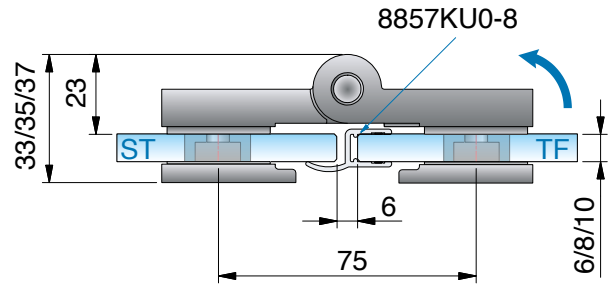

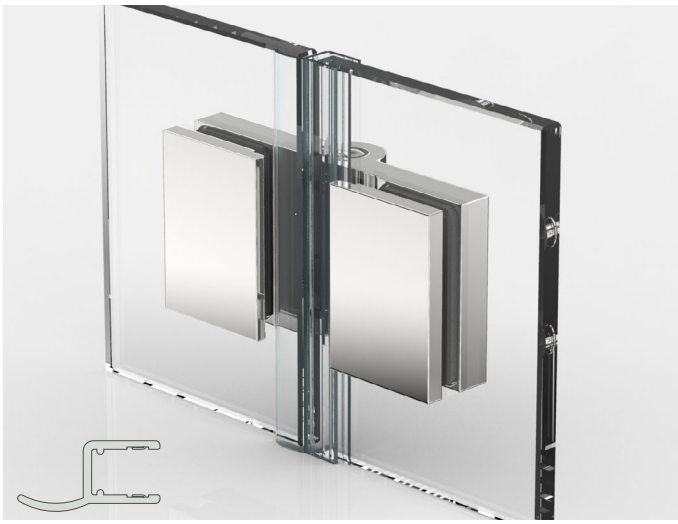

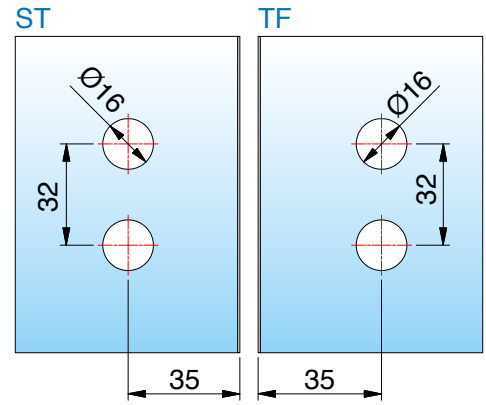

with seal profile 8857KU0-8-2010(2500), *glass processing for 8 mm

ST = side panel I TF = door panel I W = wall

8162ZN glass-wall 90° (opening outwards)

MADE IN GERMANY



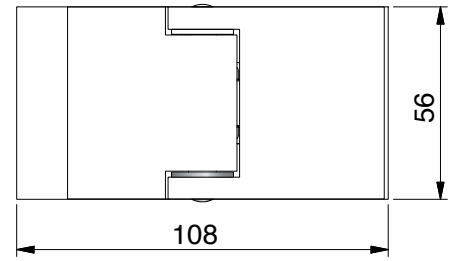

	glass thickness	
	6/8/10 mm	
article no.	springs technology	
8162__	with 3 springs	
8162__-2F	with 2 springs	
8162__-1F	with 1 spring	
8162__-0F	without springs	
Oberfläche		
ZN5	gloss chrome	

features
one-sided opening outwards 180°, concealed screws due to cover plates
*You can request the glass processing for 6 or 10 mm glass from our technical department.

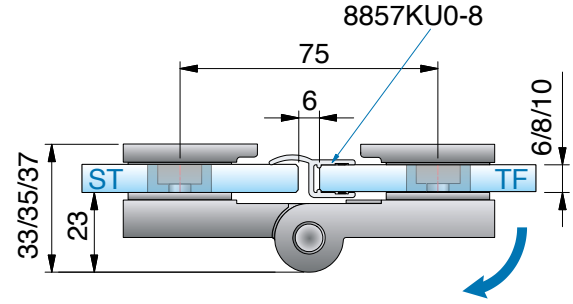



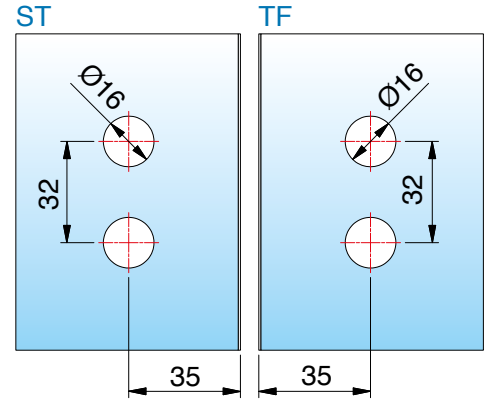

with seal profile 8857KU0-8-2010(2500), *glass processing for 8 mm

ST = side panel I TF = door panel I W = wall

8164ZN glass-glass 135° (opening outwards)

MADE IN GERMANY



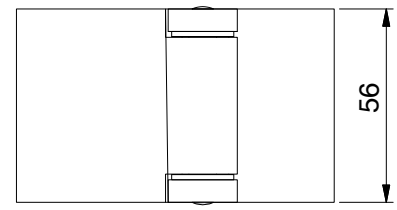

	glass thickness
	6/8/10 mm
article no.	springs technology
8164__	with 3 springs
8164__-2F	with 2 springs
8164__-1F	with 1 spring
8164__-0F	without springs
Oberfläche	
ZN5	gloss chrome

features
one-sided opening outwards 225° concealed screws due to cover plates
*You can request the glass processing for 6 or 10 mm glass from our technical department.

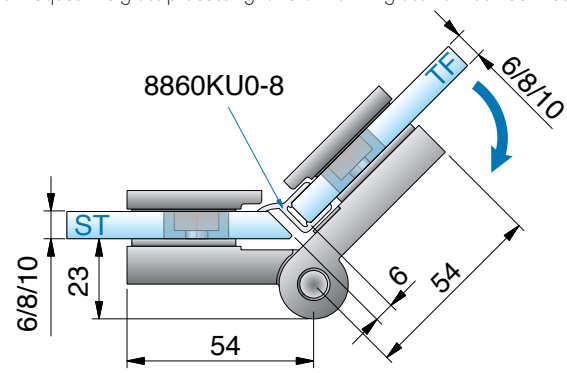

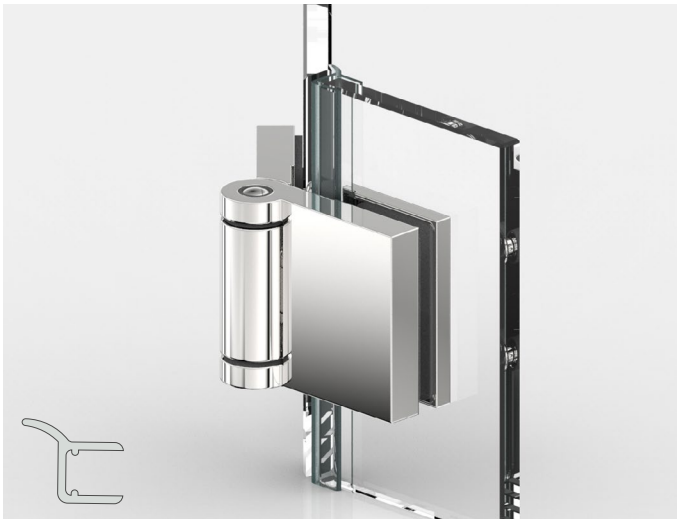

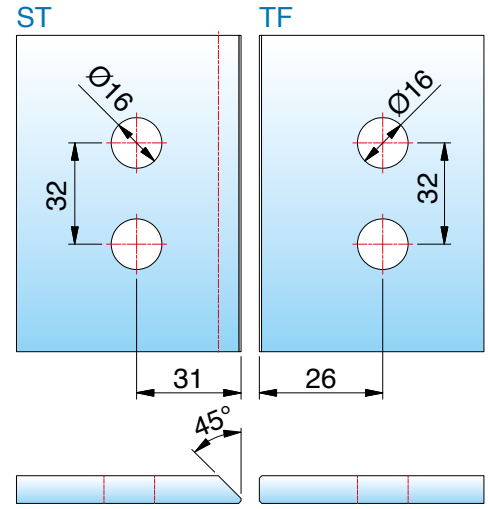

with seal profile 8860KU0-8-2010 (2500), *glass processing for 8 mm

ST = side panel I TF = door panel I W = wall

8164ZN

MADE IN GERMANY



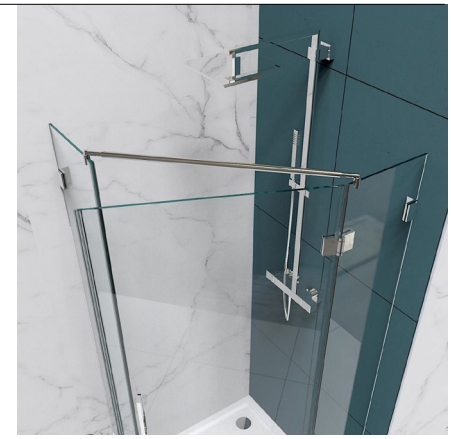

available **surface colors**

Nivello+ (flush)



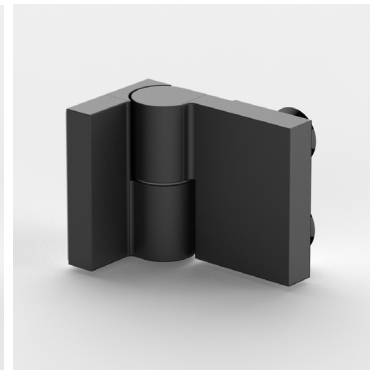

Nivello (with counter plate)



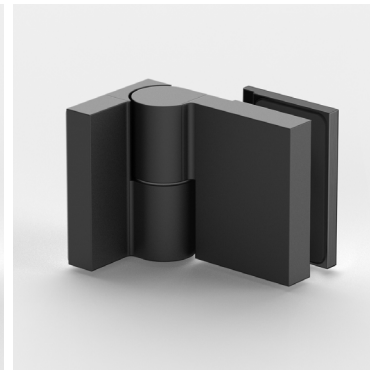

ZN5
gloss chrome

ZNPVD22
stainless steel optic

ZNPVD35
black matt

compatibility chart for fittings manufacturer colors see page 14






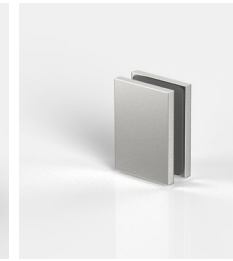

corresponding **angle brackets**

for NIVELLO+ can be found on page 294 and for NIVELLO on page 324.

MADE IN GERMANY



NIVELLO+ / NIVELLO

shower door hinge with lifting function



NIVELLO+ and NIVELLO – perfect: transparent

MADE IN GERMANY

NIVELLO, the lifting & lowering shower door hinge offers perfection in detail. NIVELLO lifts the door comfortably during opening and closes automatically during lowering.

In addition, the shower door hinge is very versityle - flush or with counter plate - NIVELLO is focused on design and functionality.

design and **function** of both series

MADE IN GERMANY

flush





- load capacity (2 hinges): **36 kg**
  corresponds to a glass door of 900 x 2000 mm with a glass thickness of 8 mm
- maximum panel size for bathtub applications 1200 x 1500 mm
- **full-length sealing profile** on the hinge side

with **counter plate**





- lifting function – **lifting height 6 mm**, after approx. 54°
- **self-closing** during lowering
- wall fixation either on the inside or outside
- elegant design – concealed screws
- the durability of the hardware has been tested internally according to DIN EN 14428:2015 5.5



NIVELLO+ – flush

Transparent design and harmonious alignment with adjacent areas are characteristics of modern architecture. The shower door hinge with a lift lowering-mechanism is flush on the inside and perfect for a comfortable cleaning. Moreover, the series offers a user-friendly mounting.

- the screw connection is made through the hinge body in a massive
- countersink bushing - this results in a particularly good surface flush
- independently adjustable in any direction (+/- 2 mm)
- flush glass mounting for easy cleaning
- infinitely adjustable closed position
- wall mounting with slotted hole adjustment
- concealed screws
- suitable for 8 and 10 mm glass

design und **function**

MADE IN GERMANY

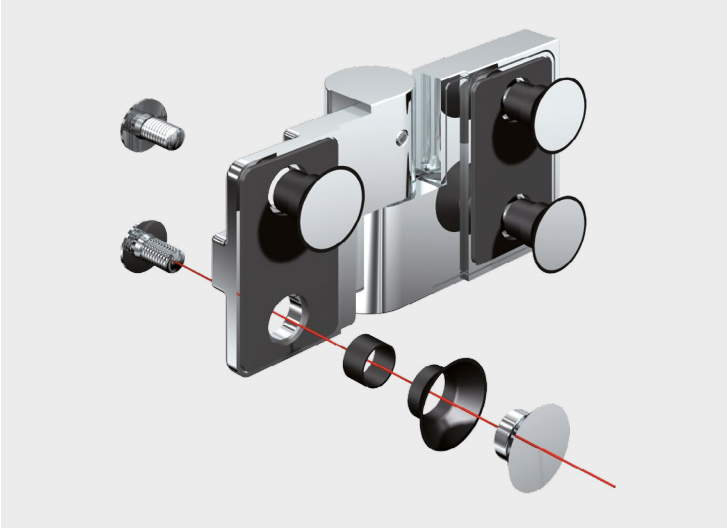

- the screws are installed through the hinge body into a massive countersink bushing – this creates a particularly good alignment with the adjacent areas
- independently adjustable in every direction (± 2 mm)

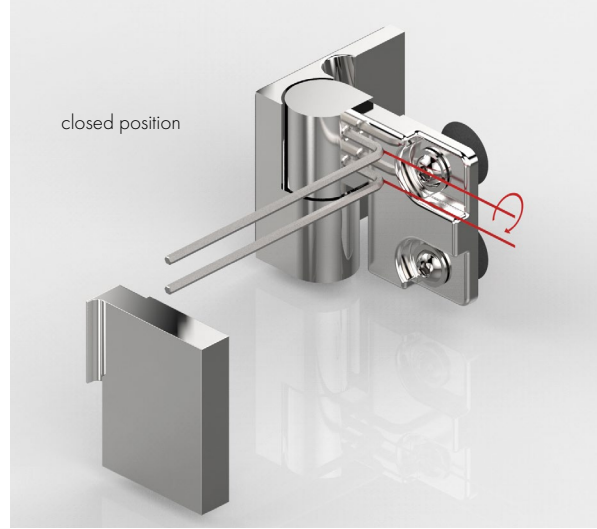

- infinitely adjustable closed position
- wall mounting with oblong holes
- elegant design – concealed screws



- flush-mounted glass fastening for simple cleaning

We recommend to install all available striker hinges with sealing profiles to avoid damage to the glass.
Please note that the instruction manual can be found at www.pauli.de.

8360ZN-L glass-wall 90°

MADE IN GERMANY



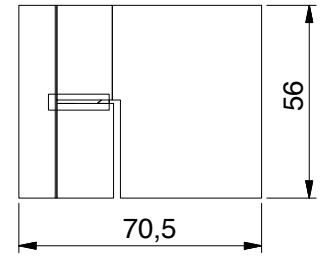

article no.	glass thickness
8360__-L	8/10 mm

finish	
ZN5	gloss chrome
ZNPVD22	stainless steel optic
ZN135	deep black matt

features
with lifting function, mounted on the left, opening outwards 90°, mounting plate on the outside, flush glass fastening, wall mounting outside with oblong hole, concealed screws with cover cap, fix points independently adjustable ± 2 mm in every direction, closed position adjustable

*You can request the glass processing for 10 mm glass from our technical department.

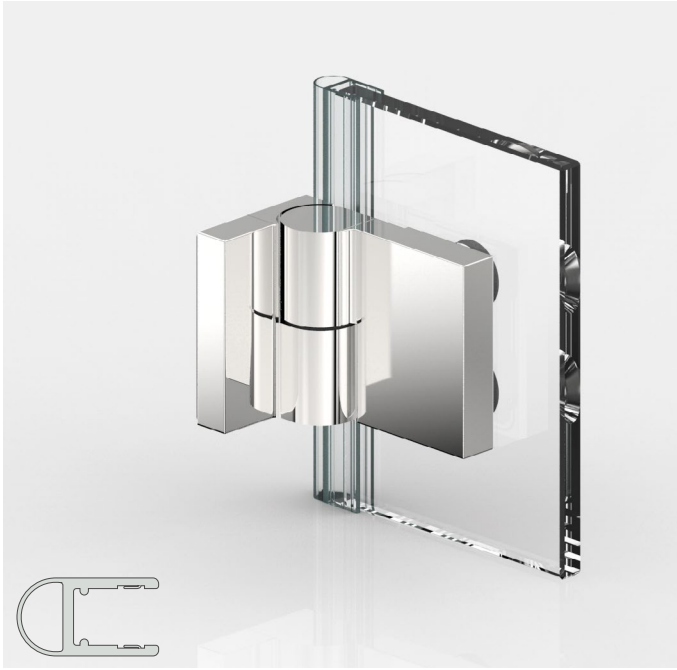

with seal profile 8861KU0-8-2010 (2500), *glass processing for 8 mm

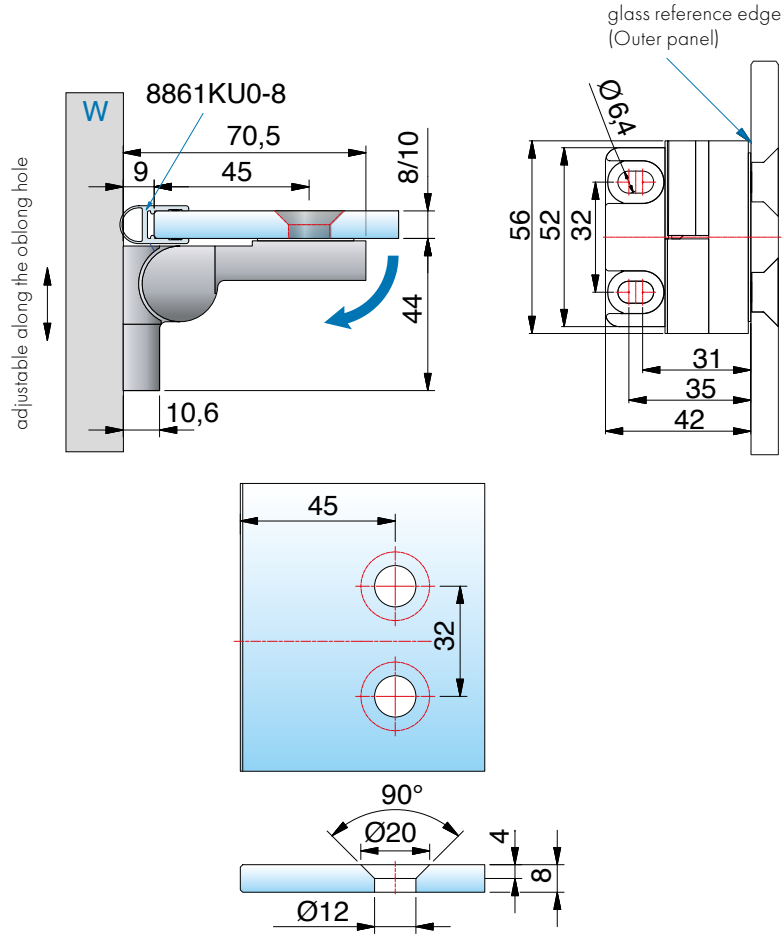

ST = side panel I TF = door panel I W = wall

8360ZN-R glass-wall 90°

MADE IN GERMANY



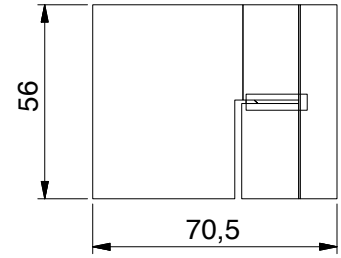

features
with lifting function, mounted on the right, opening outwards 90°, mounting plate on the outside, flush glass fastening, wall mounting outside with oblong hole, concealed screws with cover cap, fix points independently adjustable ± 2 mm in every direction, closed position adjustable

*You can request the glass processing for 10 mm glass from our technical department.

article no.	glass thickness
8360__-R	8/10 mm

finish

	ZN5	gloss chrome
	ZNPVD22	stainless steel optic
	ZN135	deep black matt

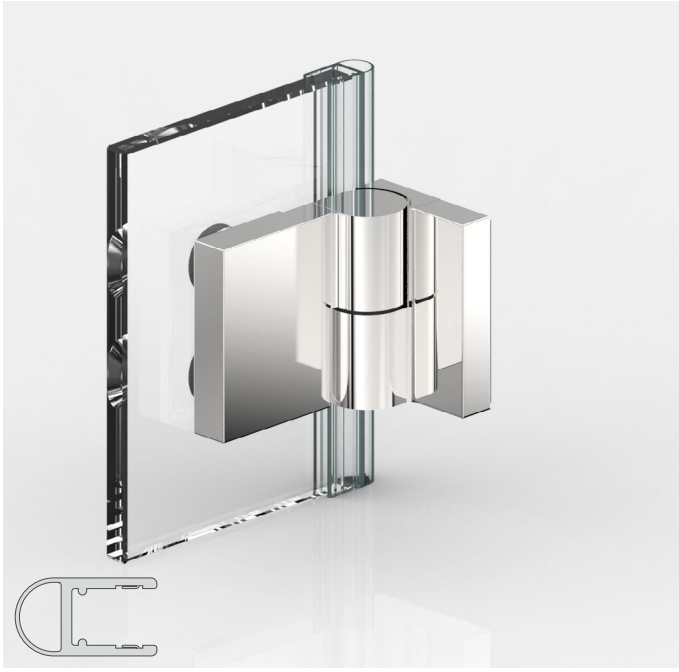

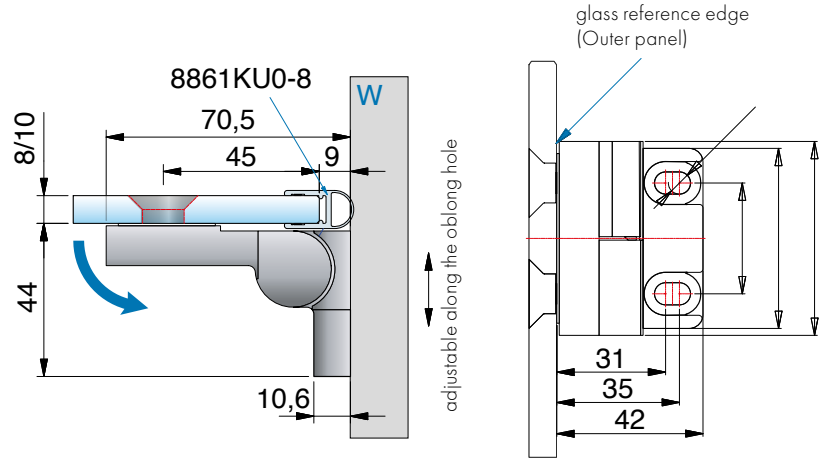

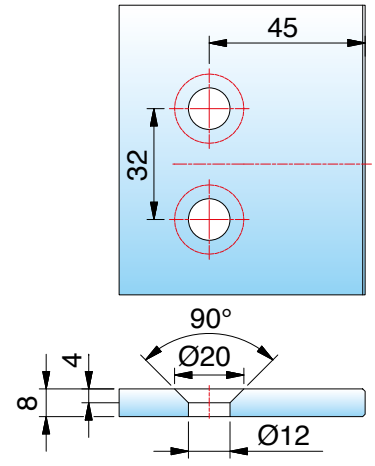

with seal profile 8861KU0-8-2010 (2500), *glass processing for 8 mm

ST = side panel I TF = door panel I W = wall

8368ZN-L glass-wall 90°

MADE IN GERMANY



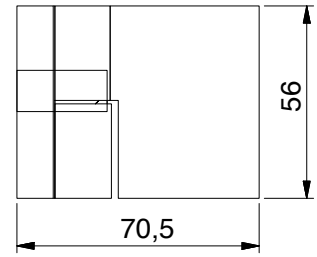

article no.	glass thickness
8368__-L	8/10 mm

finish

	ZN5	gloss chrome
	ZNPVD22	stainless steel optic
	ZN135	deep black matt

features

with lifting function, mounted on the left, opening outwards 90°, mounting plate on the inside, flush glass fastening, wall mounting outside with oblong hole, concealed screws with cover cap, fix points independently adjustable ± 2 mm in every direction, closed position adjustable

*You can request the glass processing for 10 mm glass from our technical department.



with seal profile 8861KU0-8-2010 (2500), *glass processing for 8 mm

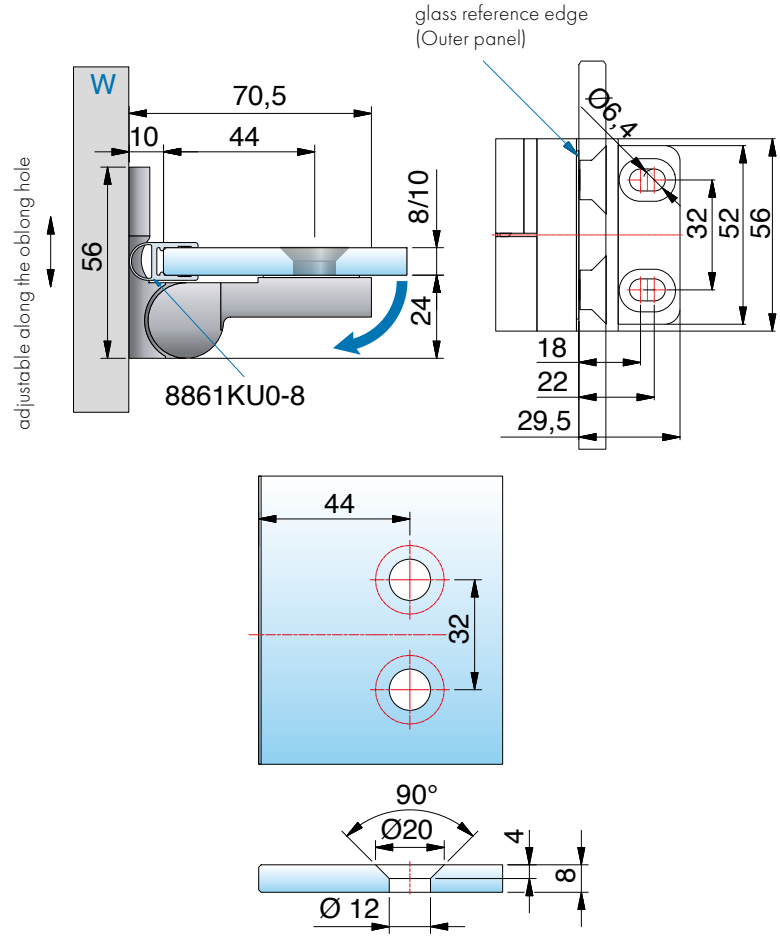

all dimensions/sealing profiles shown apply to 8 mm glass.

ST = side panel I TF = door panel I W = wall

8368ZN-R glass-wall 90°

MADE IN GERMANY



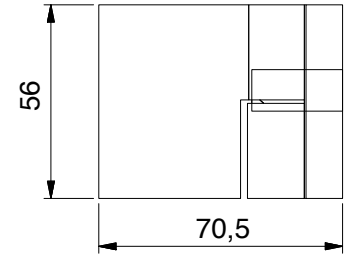

article no.	glass thickness
8368__-R	8/10 mm

finish

	ZN5	gloss chrome
	ZNPVD22	stainless steel optic
	ZN135	deep black matt

features
with lifting function, mounted on the right, opening outwards 90°, mounting plate on the inside, flush glass fastening, wall mounting outside with oblong hole, concealed screws with cover cap, fix points independently adjustable ± 2 mm in every direction, closed position adjustable

*You can request the glass processing for 10 mm glass from our technical department.



with seal profile 8861KU0-8-2010 (2500), *glass processing for 8 mm

ST = side panel I TF = door panel I W = wall

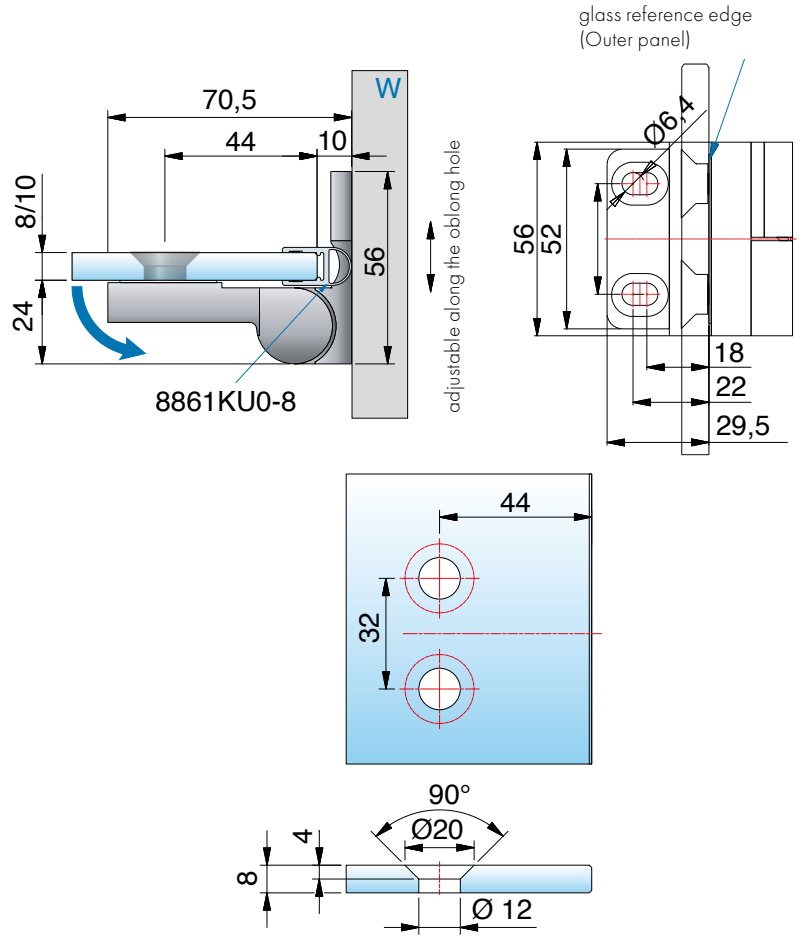

all dimensions/sealing profiles shown apply to 8 mm glass.

8362ZN-L glass-glass 180°

MADE IN GERMANY



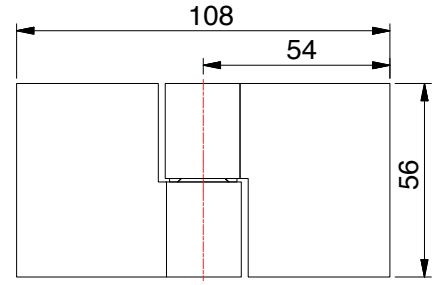

article no.	glass thickness
8362__-L	8/10 mm

finish	
ZN5	gloss chrome
ZNPVD22	stainless steel optic
ZN135	deep black matt

features
with lifting function, mounted on the left, opening outwards 90°, mounting plate on the inside, flush glass fastening, concealed screws with cover cap, fix points independently adjustable ± 2 mm in every direction, closed position adjustable

*You can request the glass processing for 10 mm glass from our technical department.

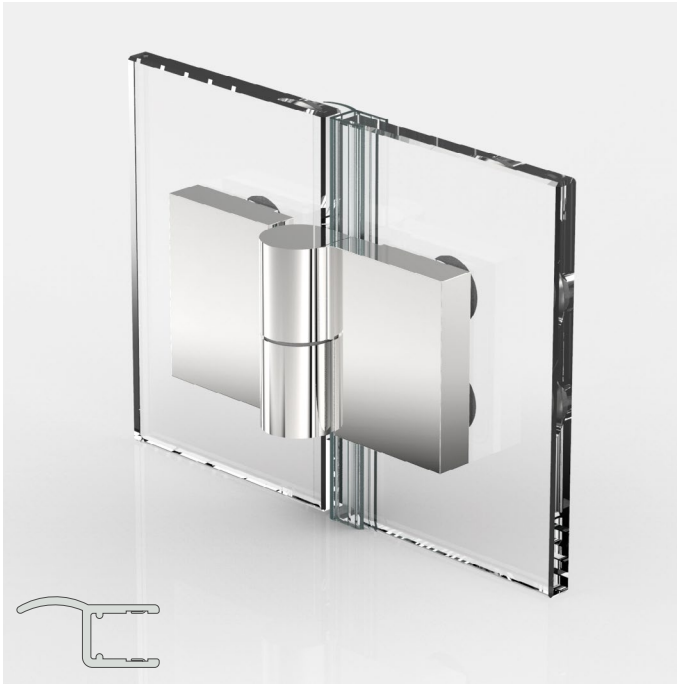

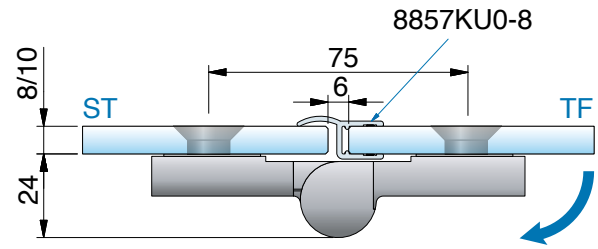

all dimensions/sealing profiles shown apply to 8 mm glass.

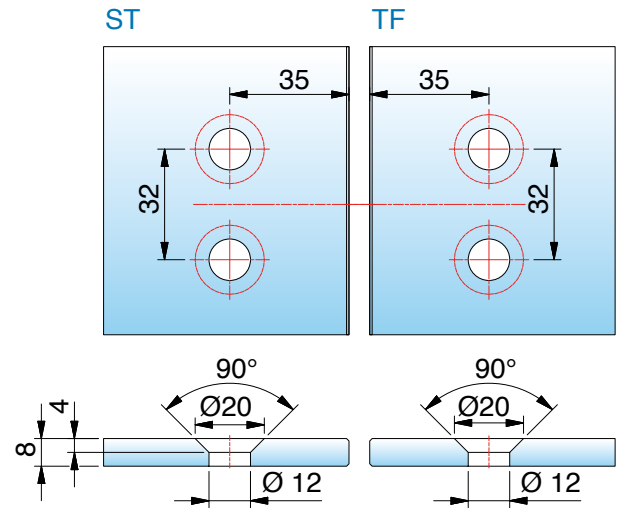

with seal profile 8857KU0-8-2010(2500), *glass processing for 8 mm

ST = side panel I TF = door panel I W = wall

8362ZN-R glass-glass 180°

MADE IN GERMANY



article no.	glass thickness
8362__-R	8/10 mm

finish		
	ZN5	gloss chrome
	ZNPVD22	stainless steel optic
	ZN135	deep black matt

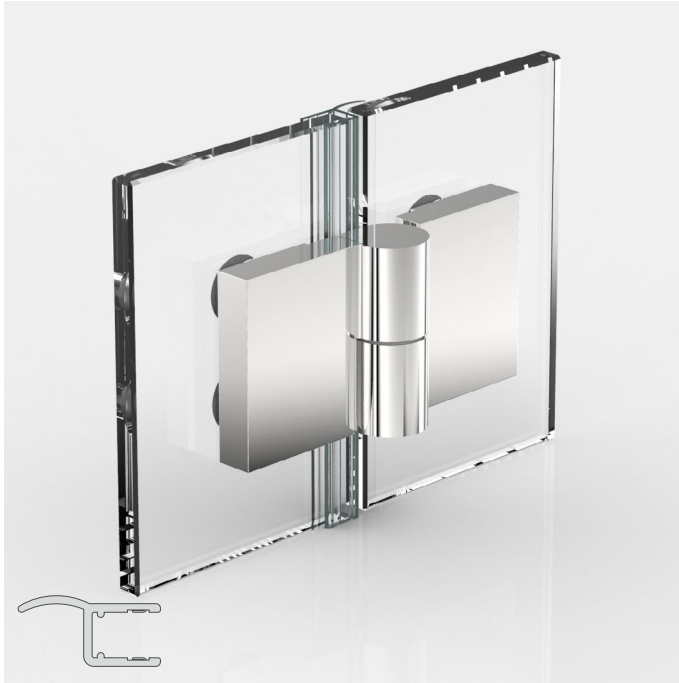

with seal profile 8857KU0-8-2010(2500), *glass processing for 8 mm

ST = side panel I TF = door panel I W = wall

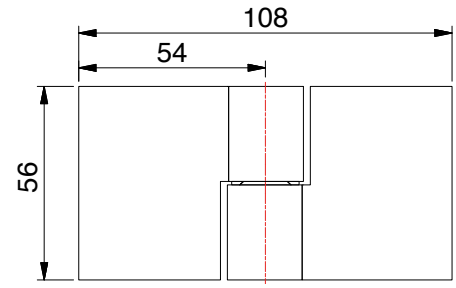

features

with lifting function, mounted on the right, opening outwards 90°, mounting plate on the inside, flush flush glass fastening, concealed screws with cover cap, fix points independently adjustable ± 2 mm in every direction, closed position adjustable

*You can request the glass processing for 10 mm glass from our technical department.

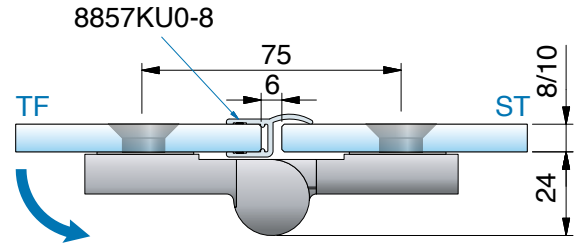

all dimensions/sealing profiles shown apply to 8 mm glass.

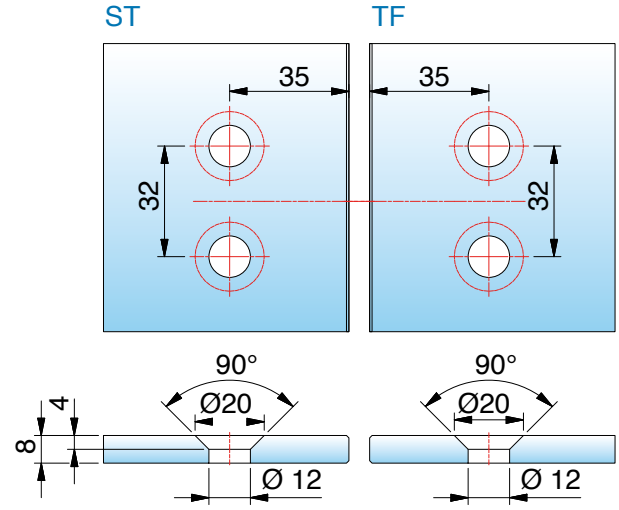

8364ZN-L glass-glass 135°

MADE IN GERMANY



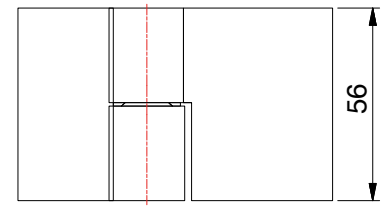

article no.	glass thickness
8364__-L	8/10 mm

finish

	ZN5	gloss chrome
	ZNPVD22	stainless steel optic
	ZN135	deep black matt

features
with lifting function, mounted on the left, opening outwards 90°, mounting plate on the inside, flush glass fastening, concealed screws with cover cap, fix points independently adjustable ± 2 mm in every direction, closed position adjustable

*You can request the glass processing for 10 mm glass from our technical department.



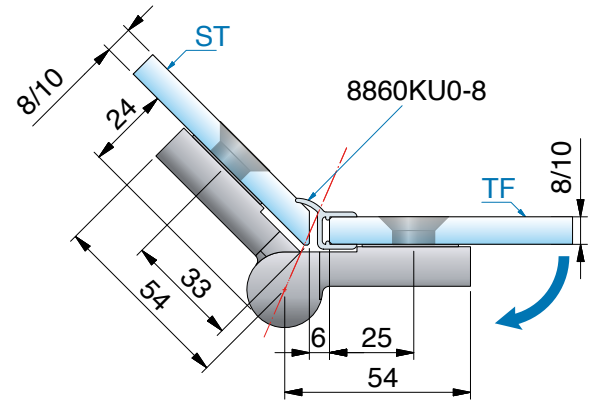

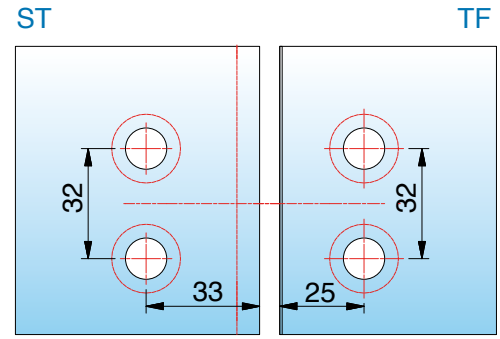

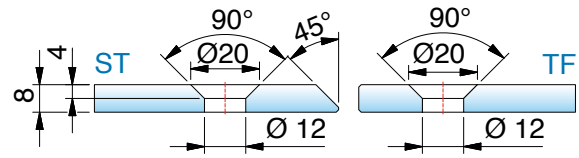

with seal profile 8860KU0-8-2010 (2500), *glass processing for 8 mm

ST = side panel I TF = door panel I W = wall

8364ZN-R glass-glass 135°

MADE IN GERMANY



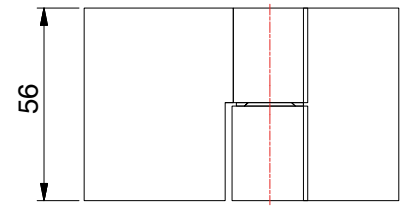

article no.	glass thickness
8364__-R	8/10 mm



finish	
ZN5	gloss chrome
ZNPVD22	stainless steel optic
ZN135	deep black matt

features
with lifting function, mounted on the right, opening outwards 90°, mounting plate on the inside, flush flush glass fastening, concealed screws with cover cap, fix points independently adjustable ± 2 mm in every direction, closed position adjustable

*You can request the glass processing for 10 mm glass from our technical department.



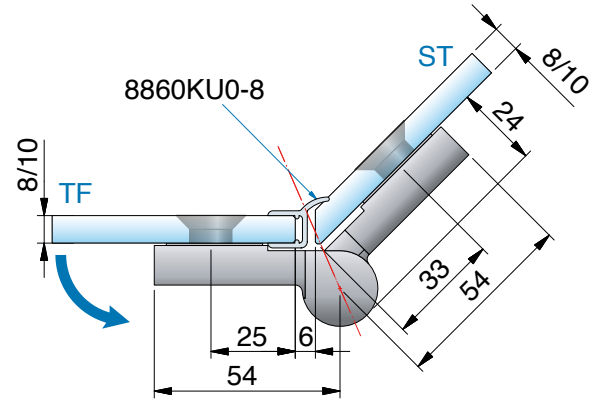

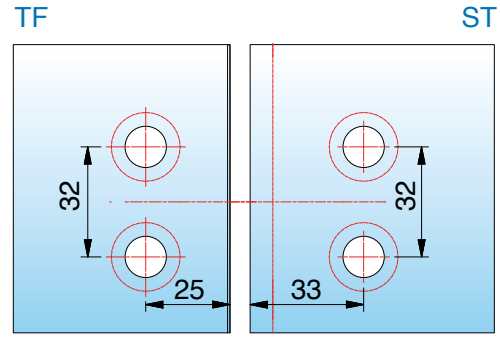

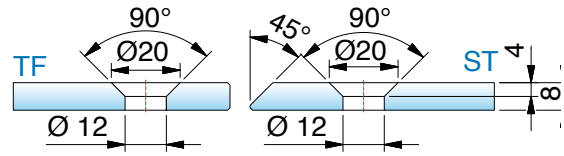

with seal profile 8860KU0-8-2010 (2500), *glass processing for 8 mm

ST = side panel I TF = door panel I W = wall

8380ZN glass-wall 90°

MADE IN GERMANY



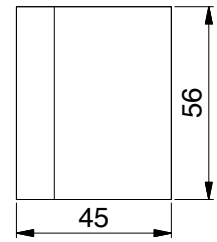

features

mounting plate outside with oblong hole, cover cap, fix point independently adjustable ± 2 mm in every direction

glass processing for 8/10 mm

article no.	glass thickness
8380__	8/10 mm



finish	
ZN5	gloss chrome
ZNPVD22	stainless steel optic
ZN135	deep black matt

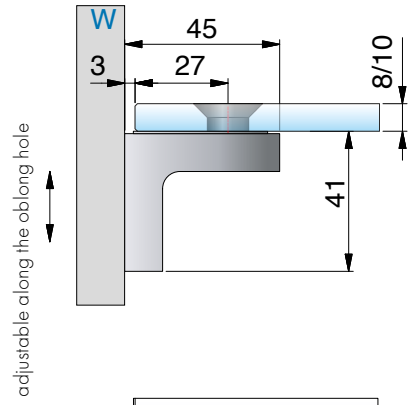



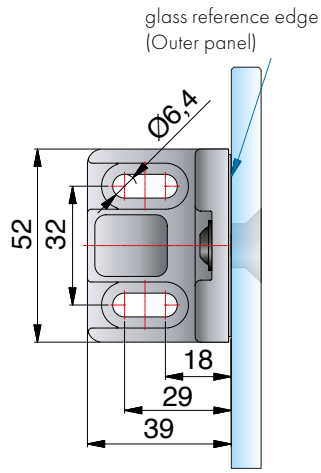

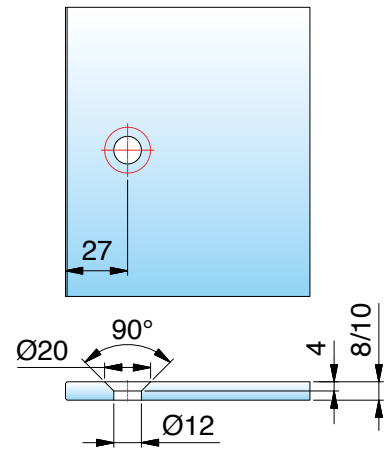

ST = side panel I TF = door panel I W = wall

8381ZN glass-wall 90°

MADE IN GERMANY



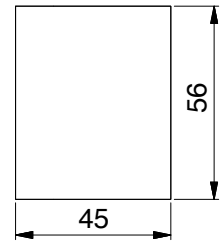

features

mounting plate outside with oblong hole, cover cap, fix point independently adjustable ± 2 mm in every direction

glass processing for 8/10 mm

article no.	glass thickness
8381__	8/10 mm



finish		
	ZN5	gloss chrome
	ZNPVD22	stainless steel optic
	ZN135	deep black matt

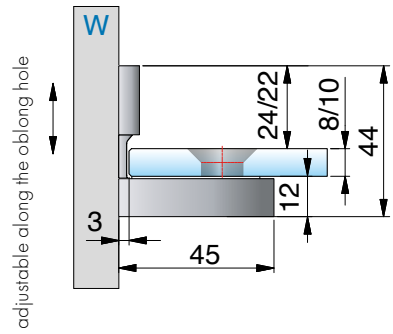



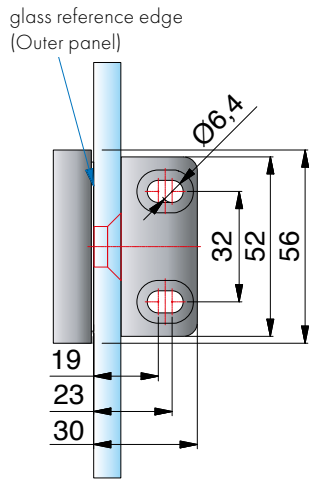

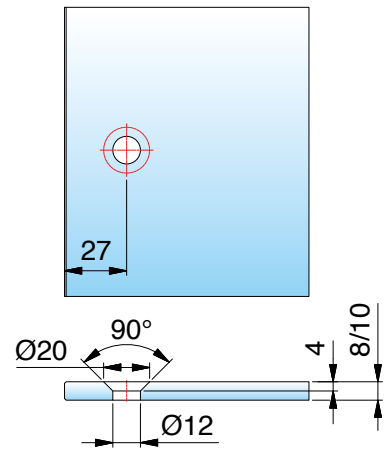

ST = side panel I TF = door panel I W = wall

8382ZN glass-glass 90°

MADE IN GERMANY



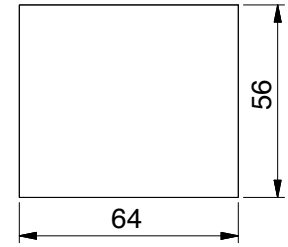

article no.	glass thickness
8382__	8/10 mm



finish	
ZN5	gloss chrome
ZNPVD22	stainless steel optic
ZN135	deep black matt

features

cover cap, fix point independently adjustable ± 2 mm in every direction

glass processing for 8/10 mm

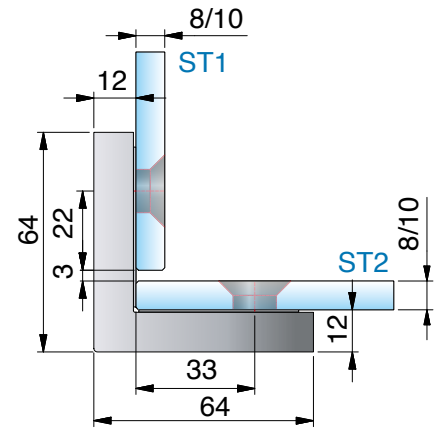



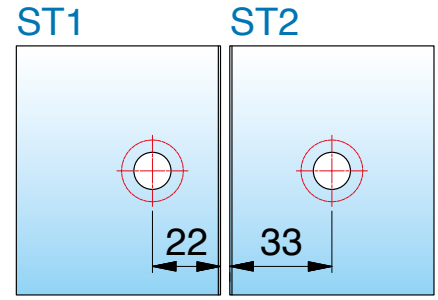

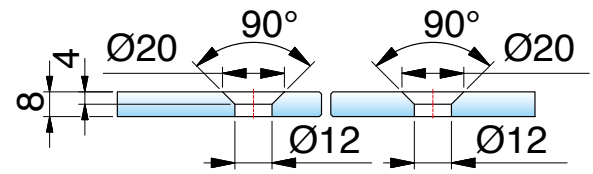

glass processing for 8 mm





illustration design in special colour

NIVELLO – with counter plate

NIVELLO combines the special technical possibilities of NIVELLO^{+} with a simple glass processing by the use of a very flat counter plate. The system plays its strengths for example in the use of bathtub folding partitions.

- mounting plate inside or outside
- glass fastening with counter plate
- hinges mountable on the right and on the left
- suitable for 6, 8 + 10 mm glass
- good adjustability within the hole
- fully adjustable closed position
- wall mounting with oblong hole
- elegant design – concealed screws

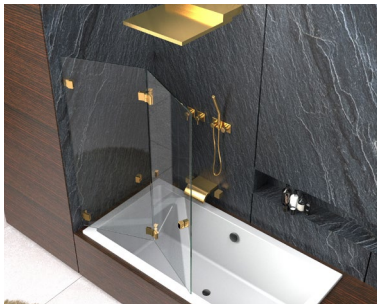

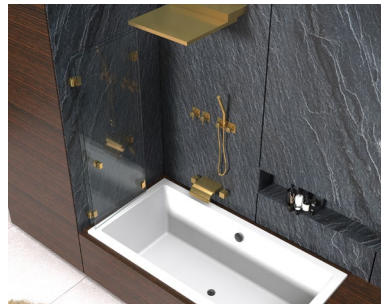



illustration design in special colour

- various folding systems possible

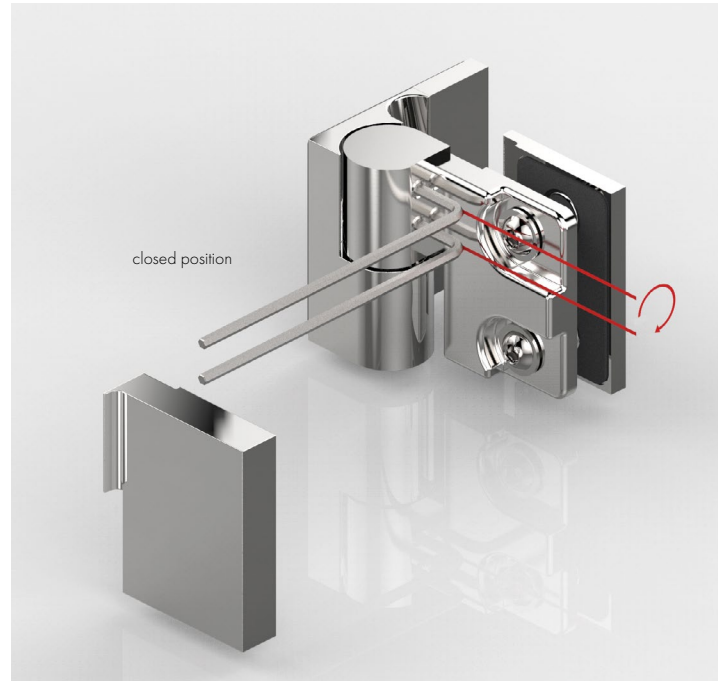

- fully adjustable closed position





- hinges individually usable depending on the situation – mounting plate inside or outside

We recommend to install all available striker hinges with sealing profiles to avoid damage to the glass.
Please note that the instruction manual can be found at www.pauli.de.

8361ZN-L glass-wall 90°

MADE IN GERMANY



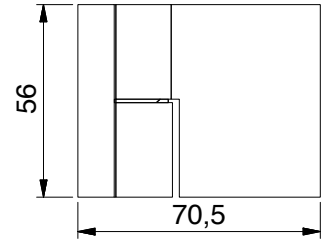

article no.	glass thickness
8361__-L	6/8/10 mm

Oberfläche	
ZN5	glanzverchromt
ZNPVD22	Edelstahloptik
ZN135	tiefschwarz matt

features

glass fastening with counter plate, wall mounting with oblong hole, concealed screws with cover cap, mountable in both situations, closed position adjustable

*You can request the glass processing for 6/10 mm glass from our technical department.

mounted on the left, opening outwards 90°, mounting plate on the outside

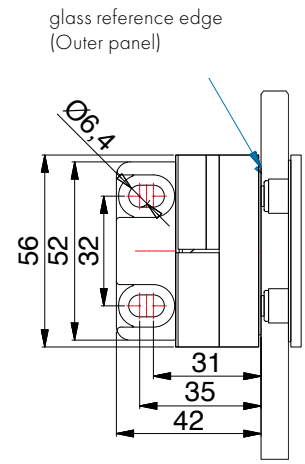



mounted on the right, opening inwards 90°, mounting plate on the inside

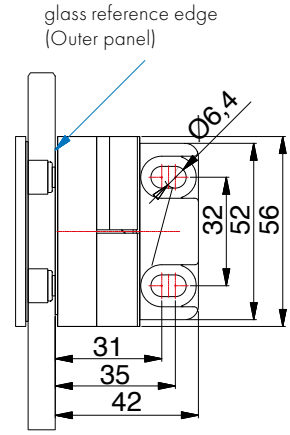

ST = side panel I TF = door panel I W = wall

8361ZN-L glass-wall 90°

MADE IN GERMANY

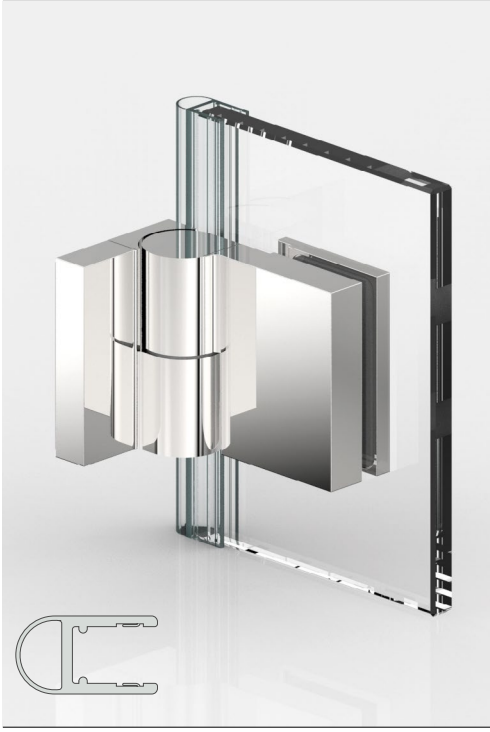

mounted on the left, opening outwards 90°, mounting plate on the outside
with seal profile 8861KU0-8-2010, *glass processing for 8 mm

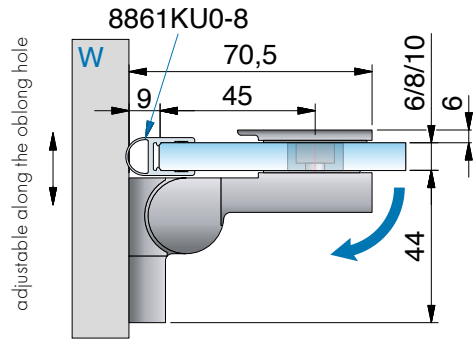

all dimensions shown
apply to 8 mm glass.

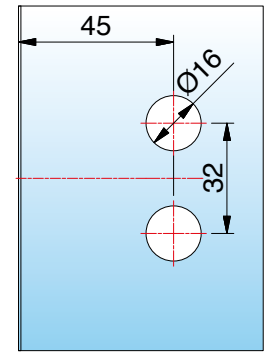

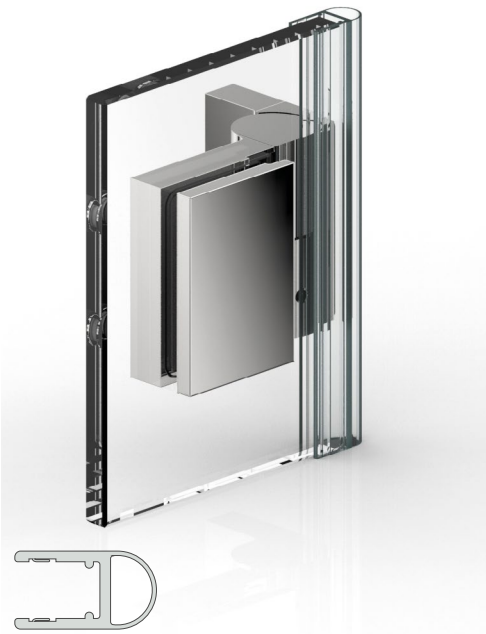

mounted on the right, opening inwards 90°, mounting plate on the inside
with seal profile 8861KU0-8-2010, *glass processing for 8 mm

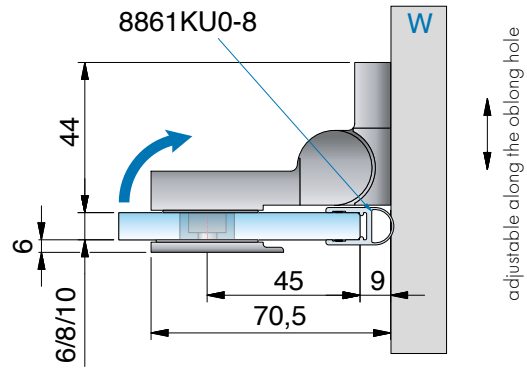

all dimensions shown
apply to 8 mm glass.

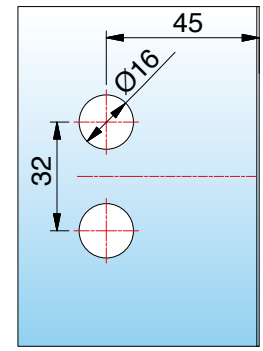

ST = side panel I TF = door panel I W = wall

8361ZN-R glass-wall 90°

MADE IN GERMANY



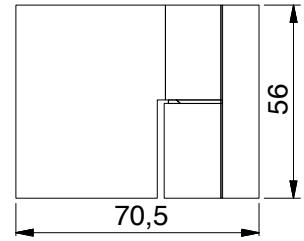

features

glass fastening with counter plate, wall mounting with oblong hole, concealed screws with cover cap, mountable in both situations, closed position adjustable.

*You can request the glass processing for 6/10 mm glass from our technical department.

article no.	glass thickness
8361__-R	6/8/10 mm

Oberfläche	
ZN5	glanzverchromt
ZNPVD22	Edelstahloptik
ZN135	tiefschwarz matt

glass reference edge (Outer panel)

mounted on the right, opening outwards 90°, mounting plate on the outside

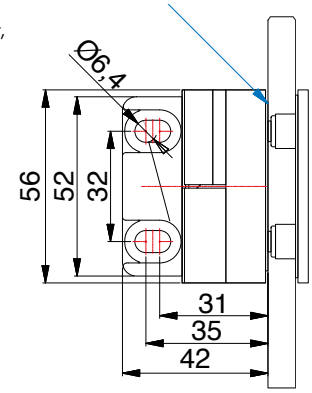



glass reference edge (Outer panel)

mounted on the left, opening inwards 90°, mounting plate on the inside

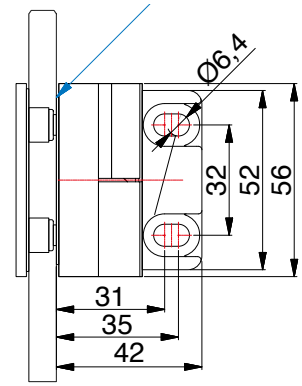

8361ZN-R glass-wall 90°

MADE IN GERMANY

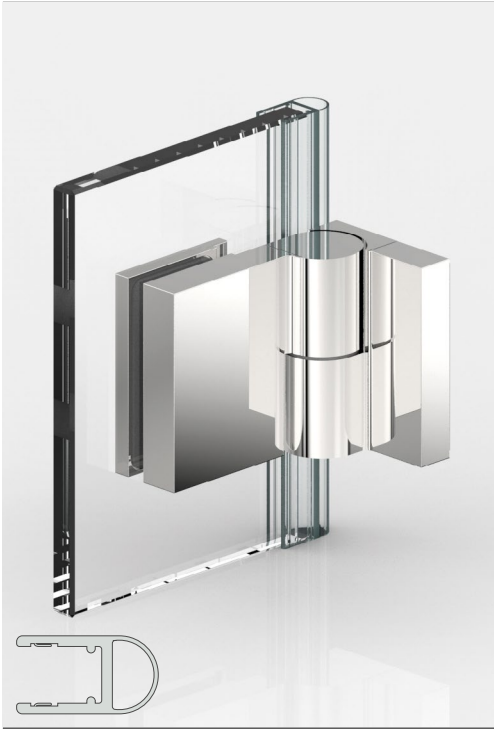

mounted on the right, opening outwards 90°, mounting plate on the outside
with seal profile 8861KU0-8-2010, *glass processing for 8 mm

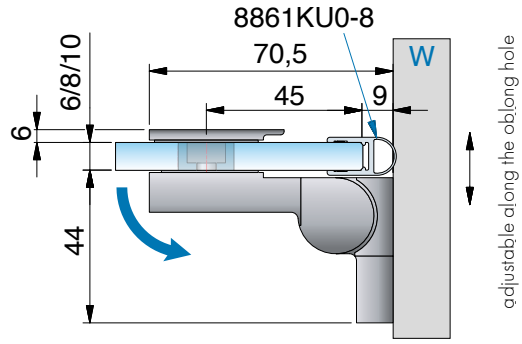

all dimensions shown
apply to 8 mm glass.

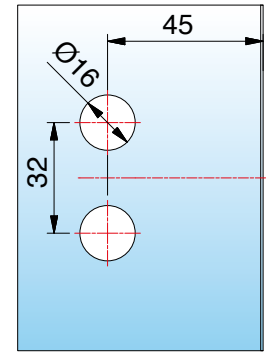

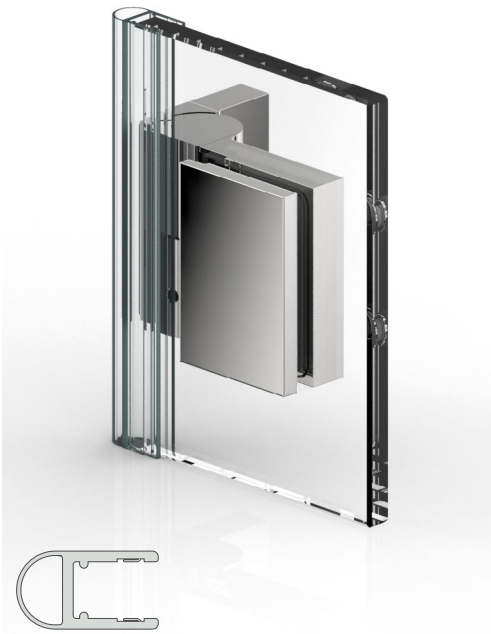

mounted on the left, opening inwards 90°, mounting plate on the inside
with seal profile 8861KU0-8-2010, *glass processing for 8 mm

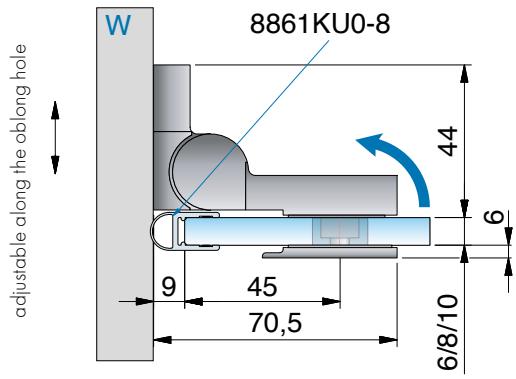

all dimensions shown
apply to 8 mm glass.

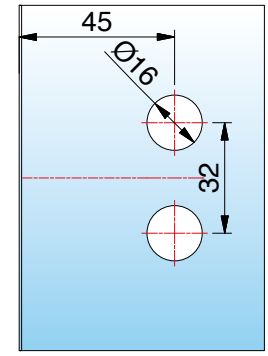

ST = side panel I TF = door panel I W = wall

8369ZN-L glass-wall 90°

MADE IN GERMANY



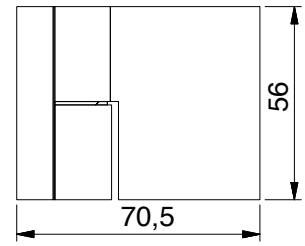

features
glass fastening with counter plate, wall mounting with oblong hole, concealed screws with cover cap, closed position adjustable

*You can request the glass processing for 6/10 mm glass from our technical department.

article no.	glass thickness
8369__-L	6/8/10 mm

Oberfläche		
	ZN5	glanzverchromt
	ZNPVD22	Edelstahloptik
	ZN135	tiefschwarz matt

mounted on the left, opening outwards 90°, mounting plate on the inside
with seal profile 8861KU0-8-2010, *glass processing for 8 mm

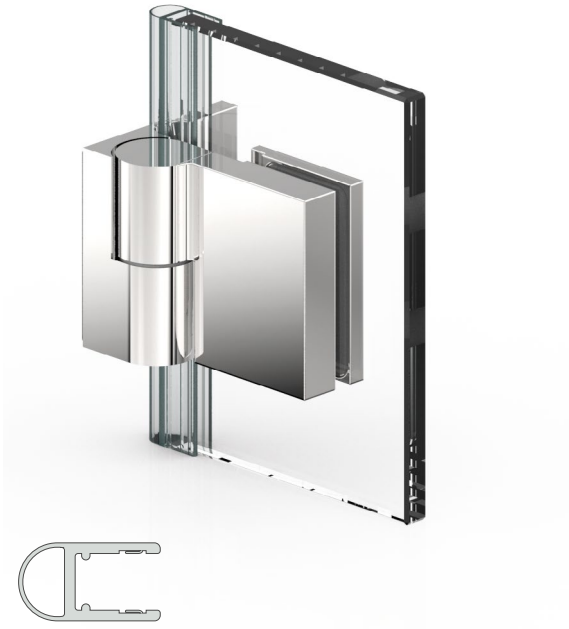

glass reference edge
(Outer panel)

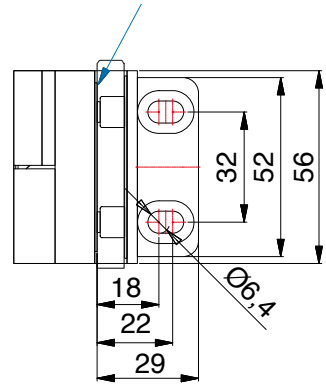

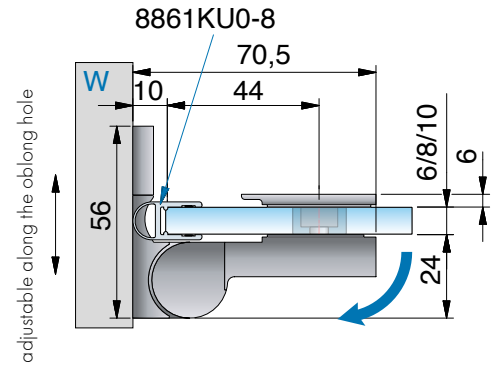

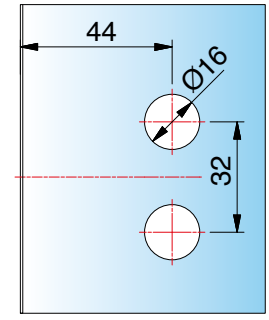

ST = side panel I TF = door panel I W = wall

8369ZN-R glass-wall 90°

MADE IN GERMANY



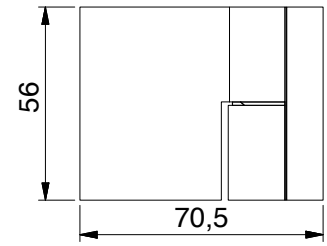

features
glass fastening with counter plate, wall mounting with oblong hole, concealed screws with cover cap, closed position adjustable

*You can request the glass processing for 10 mm glass from our technical department.

article no.	glass thickness
8369__-R	6/8/10 mm



Oberfläche		
	ZN5	glanzverchromt
	ZNPVD22	Edelstahloptik
	ZN135	tiefschwarz matt

mounted on the right, opening outwards 90°, mounting plate on the inside
with seal profile 8861KU0-8-2010, *glass processing for 8 mm



glass reference edge
(Outer panel)

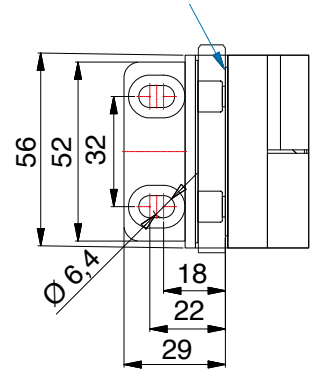

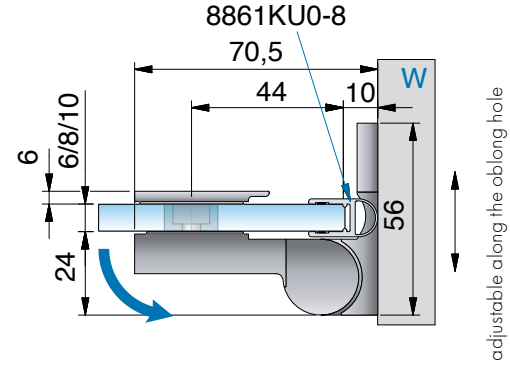

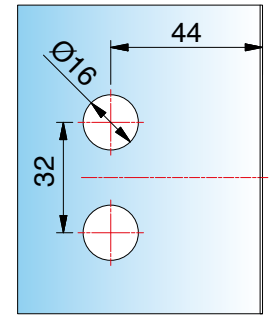

ST = side panel I TF = door panel I W = wall

8363ZN-L glass-glass 180°

MADE IN GERMANY



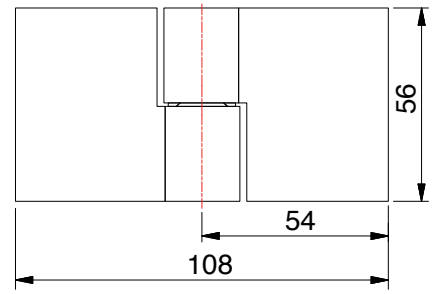

article no.	glass thickness
8363__-L	6/8/10 mm



Oberfläche		
	ZN5	glanzverchromt
	ZNPVD22	Edelstahloptik
	ZN135	tiefschwarz matt

features

glass fastening with counter plate, wall mounting with oblong hole, concealed screws with cover cap, mountable in both situations, closed position adjustable

*You can request the glass processing for 6/10 mm glass from our technical department.



8363ZN-L glass-glass 180°

MADE IN GERMANY



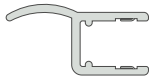

mounted on the left, opening outwards 90°

with seal profile 8857KU0-8-2010(2500), *glass processing for 8 mm

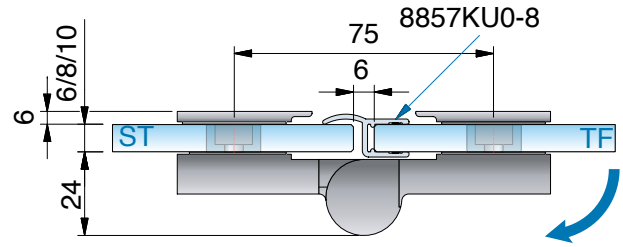

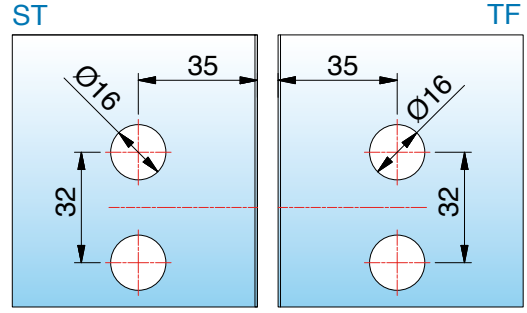

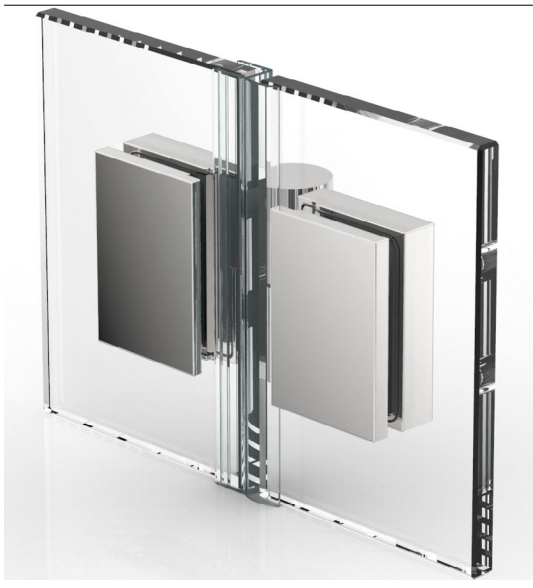

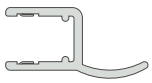

mounted on the right, opening inwards 90°

with seal profile 8857KU0-8-2010(2500), *glass processing for 8 mm

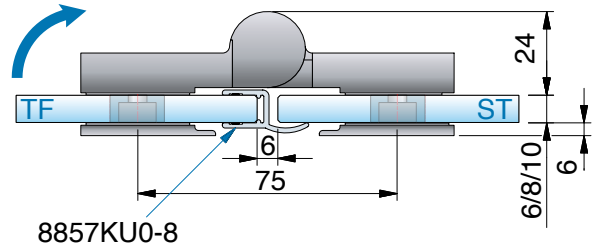

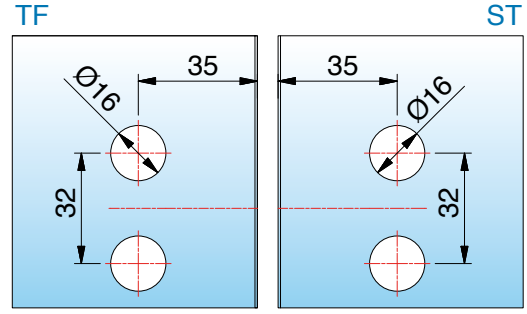

ST = side panel I TF = door panel I W = wall

8363ZN-R glass-glass 180°

MADE IN GERMANY



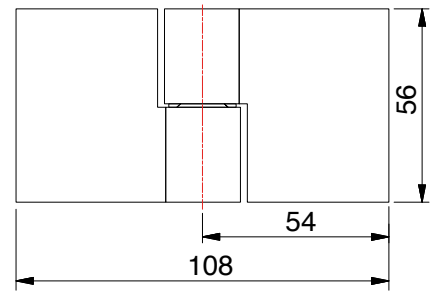

article no.	glass thickness
8363__-R	6/8/10 mm



Oberfläche		
	ZN5	glanzverchromt
	ZNPVD22	Edelstahloptik
	ZN135	tiefschwarz matt

features

glass fastening with counter plate, wall mounting with oblong hole, concealed screws with cover cap, mountable in both situations, closed position adjustable

*You can request the glass processing for 6/10 mm glass from our technical department.



8363ZN-R glass-glass 180°

MADE IN GERMANY



mounted on the left, opening outwards 90°
with seal profile 8857KU0-8-2010(2500), *glass processing for 8 mm

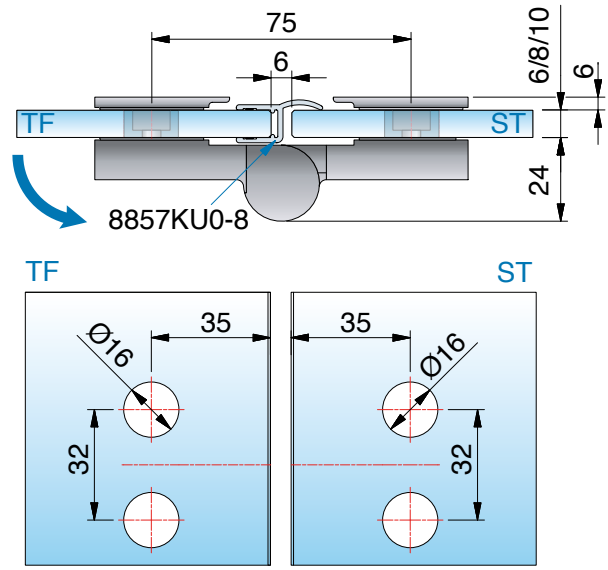



mounted on the right, opening inwards 90°
with seal profile 8857KU0-8-2010(2500), *glass processing for 8 mm

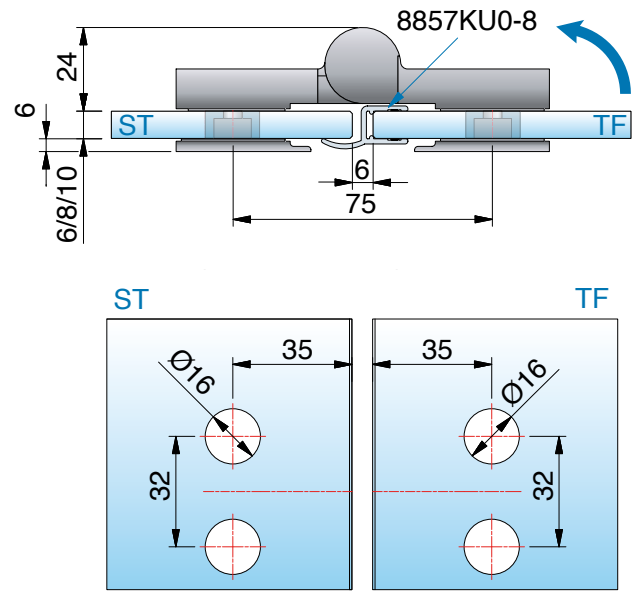

ST = side panel I TF = door panel I W = wall

8365ZN-L glass-glass 135°

MADE IN GERMANY



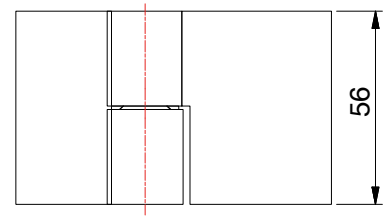

article no.	glass thickness
8365__-L	6/8/10 mm



Oberfläche		
	ZN5	glanzverchromt
	ZNPVD22	Edelstahloptik
	ZN135	tiefschwarz matt

features

glass fastening with counter plate, wall mounting with oblong hole, concealed screws with cover cap, mountable in both situations, closed position adjustable

*You can request the glass processing for 6/10 mm glass from our technical department.



8365ZN-L glass-glass 135°

MADE IN GERMANY



mounted on the left, opening outwards 180°
with seal profile 8860KU0-8-2010, *glass processing for 8 mm

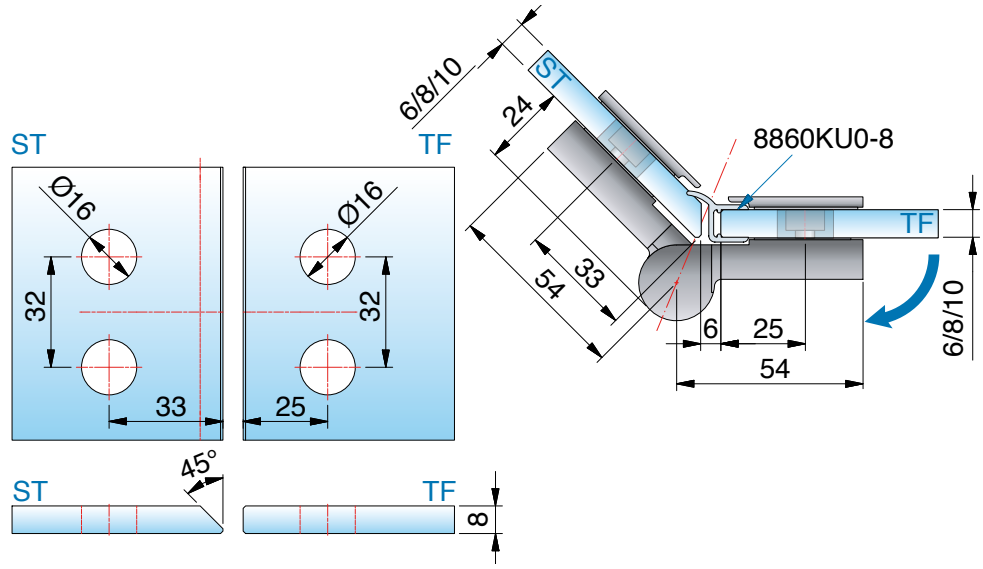



mounted on the right, opening inwards 135°
with seal profile 8860KU0-8-2010, *glass processing for 8 mm

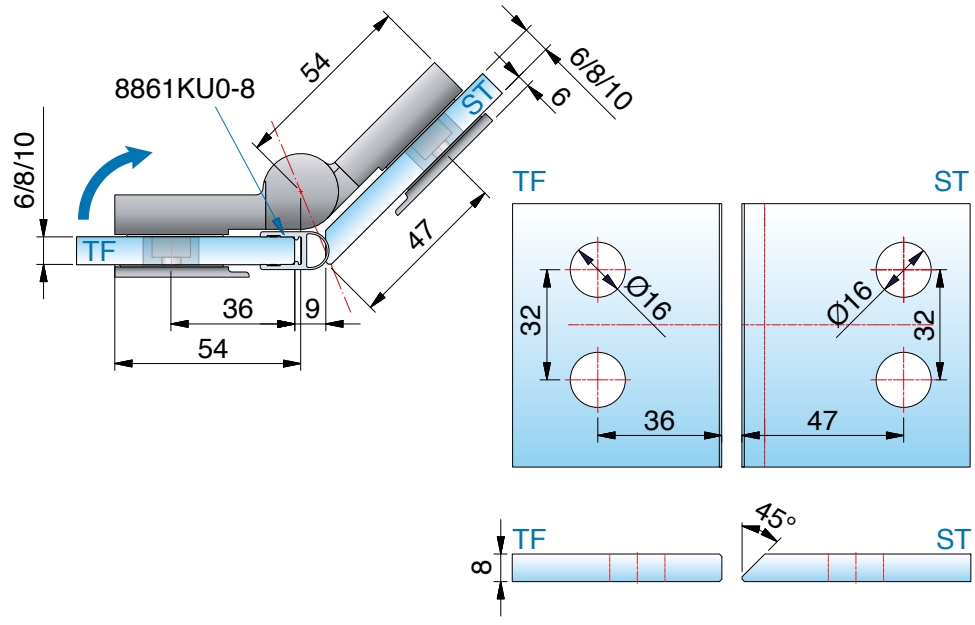

ST = side panel I TF = door panel I W = wall

8365ZN-R glass-glass 135°

MADE IN GERMANY



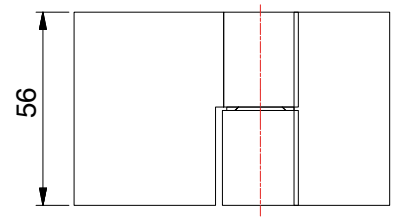

article no.	glass thickness
8365__-R	6/8/10 mm



Oberfläche		
	ZN5	glanzverchromt
	ZNPVD22	Edelstahloptik
	ZN135	tiefschwarz matt

features

glass fastening with counter plate, wall mounting with oblong hole, concealed screws with cover cap, mountable in both situations, closed position adjustable

*You can request the glass processing for 6/10 mm glass from our technical department.



8365ZN-R glass-glass 135°

MADE IN GERMANY



mounted on the right, opening outwards 180°
with seal profile 8860KU0-8-2010, *glass processing for 8 mm

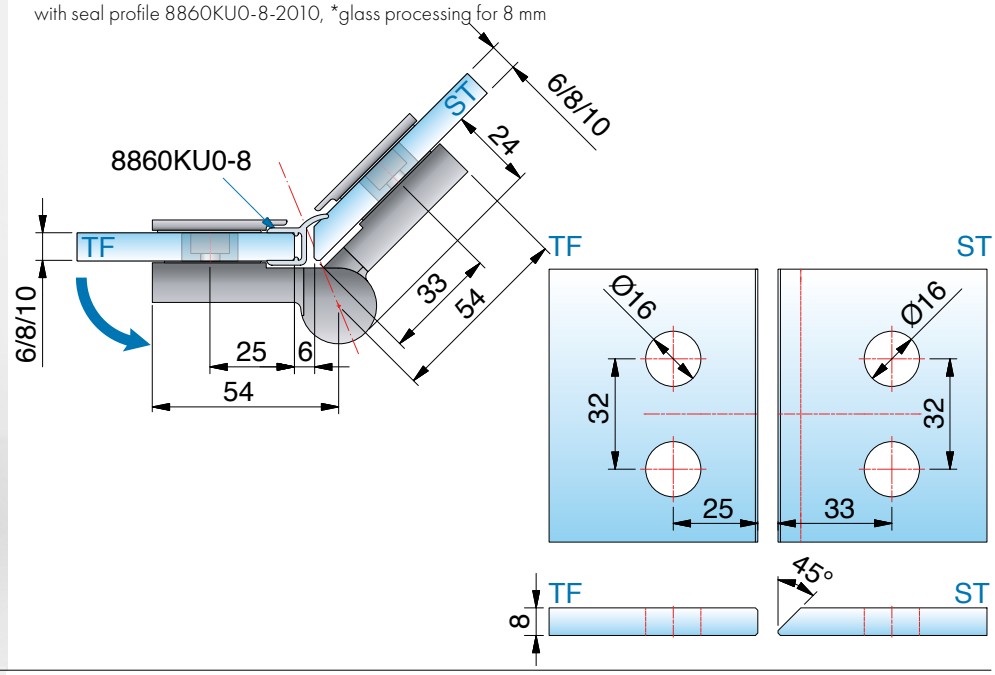



mounted on the left, opening inwards 135°
with seal profile 8861KU0-8-2010, *glass processing for 8 mm

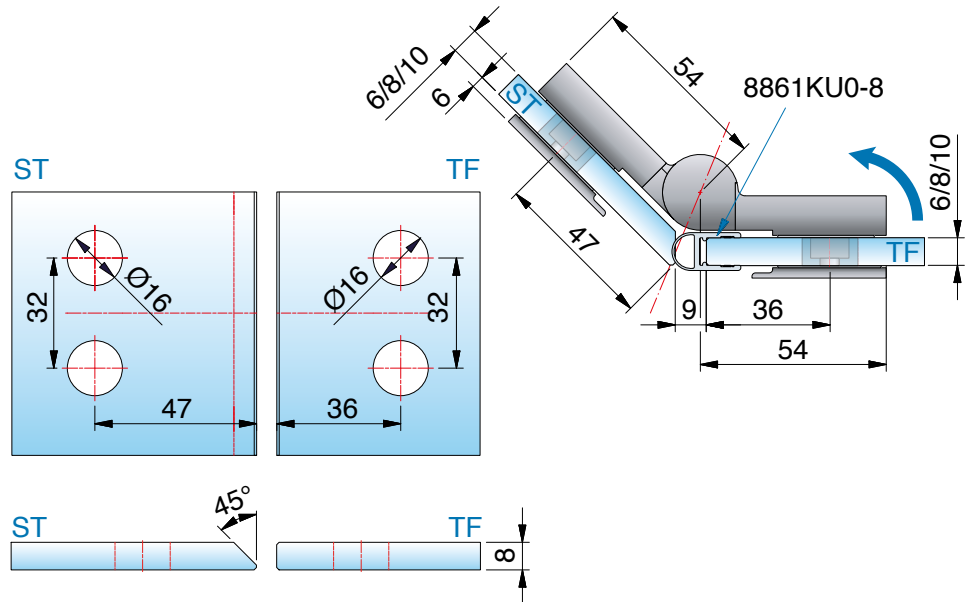

ST = side panel I TF = door panel I W = wall

8367ZN-L glass-glass 90°

MADE IN GERMANY



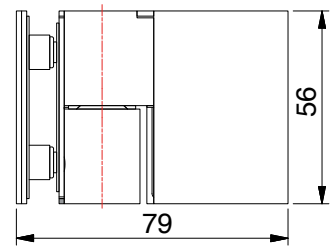

features
glass fastening with counter plate, concealed screws with cover cap, closed position adjustable

*You can request the glass processing for 6/10 mm glass from our technical department.

article no.	glass thickness
8367__-L	6/8/10 mm



Oberfläche		
	ZN5	glanzverchromt
	ZNPVD22	Edelstahloptik
	ZN135	tiefschwarz matt

mounted on the left, opening inwards 90°
with seal profile 8860KU0-8-2010, *glass processing for 8 mm

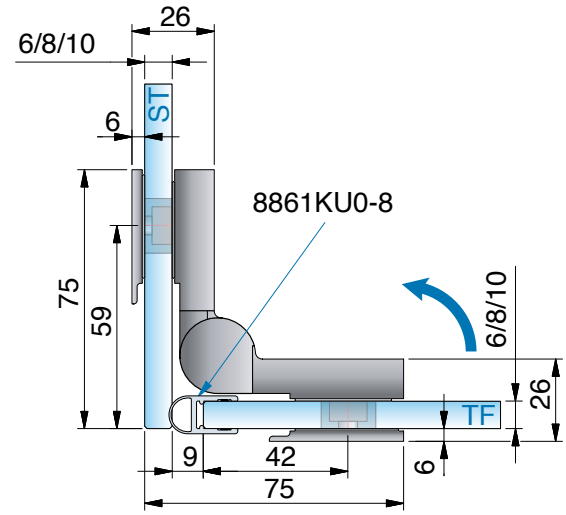



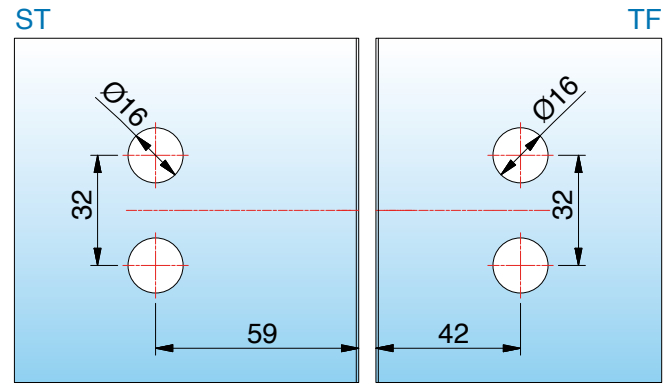

ST = side panel I TF = door panel I W = wall

8367ZN-R glass-glass 90°

MADE IN GERMANY



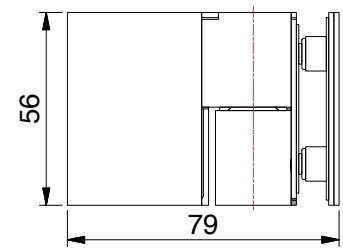

features
glass fastening with counter plate, concealed screws with cover cap, closed position adjustable

*You can request the glass processing for 6/10 mm glass from our technical department.

article no.	glass thickness
8367__-R	6/8/10 mm



Oberfläche		
	ZN5	glanzverchromt
	ZNPVD22	Edelstahloptik
	ZN135	tiefschwarz matt

mounted on the right, opening inwards 90°
with seal profile 8860KU0-8-2010, *glass processing for 8 mm



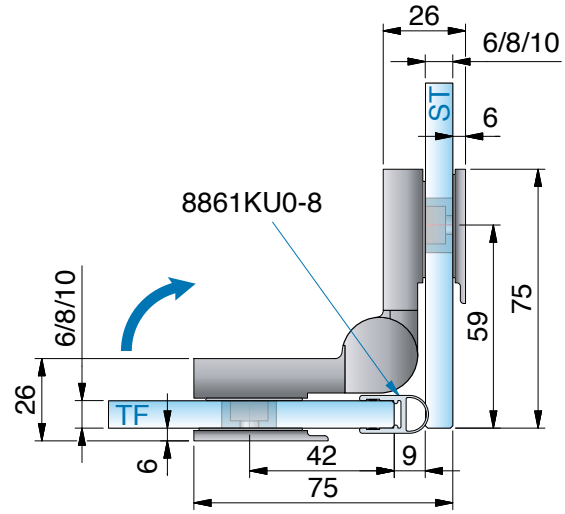

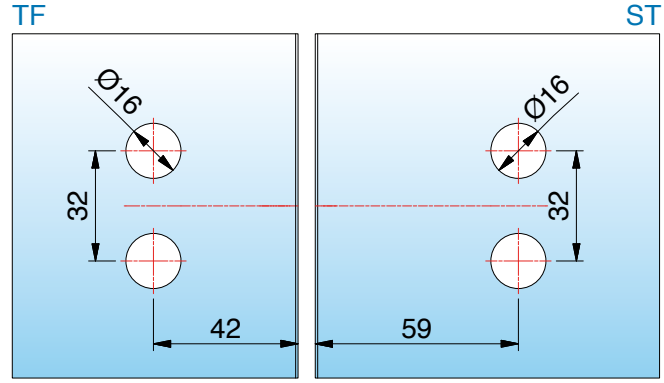

ST = side panel I TF = door panel I W = wall



ZN5
gloss chrome

compatibility chart for fittings manufacturer colors see page 14





corresponding **angle brackets**

for FLUTURE can be found on page 346.

MADE
IN
GERMANY



FLUTURE

shower door hinge set



FLUTURE – stylish: aesthetic and functional

MADE IN GERMANY

FLUTURE stands for beauty and functionality, from self-regulated closing on the last few centimeters up to an adjustable closed position. A further speciality of FLUTURE is the clamping on the door panel. This allows a continuously adjustable overlapping, equalizing existing tolerances on site very comfortably.

- closed position fully adjustable ± 6°
- quick and easy assembling due to free positioning of the overlap, simple tolerance compensation
- minimal glass work: one hole per fitting on the side panel and no holes needed on the door panel (except for door handle)
- opening angle outwards 180° (according to different sets)
- glass thickness: 6 and 8 mm, combinded thicknesses possible
- load capacity (2 hinges): 36 kg
  corresponds to a maximum glass door size of 900 x 2000 mm with a glass thickness of 8 mm
- the durability of the hardware has been tested internally according to DIN EN 14428:2015 5.5







- one sided opening 180° outwards
- easy cleaning due to completely outwards opening door panel

Please note that the instruction manual can be found at www.pauli.de



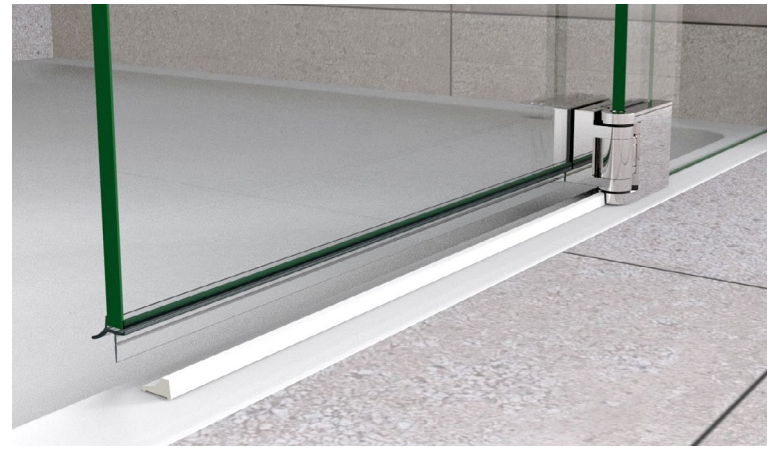

- optimized for constructions with or without splash guard

8190ZN-BS Glas-Glas 180°, overlapping

MADE IN GERMANY

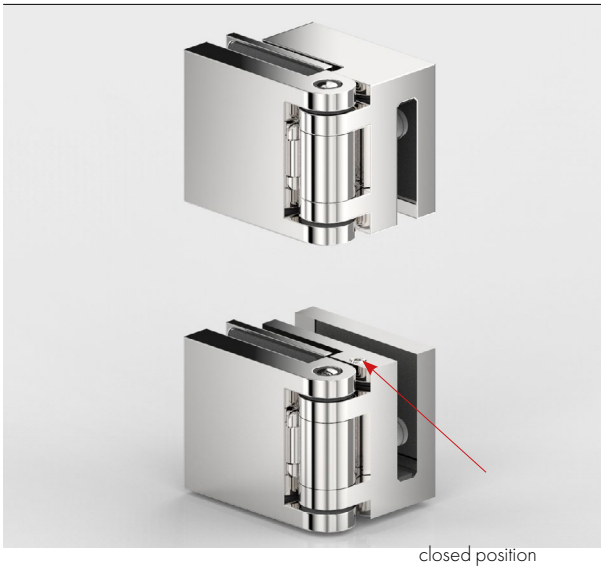

closed position
set screw

article no.	glass thickness
8190ZN__-BS	6/8 mm
finish	
ZN5 gloss chrome	



features
opening outwards 180°, use with seal profile 8863KU0-8-2010

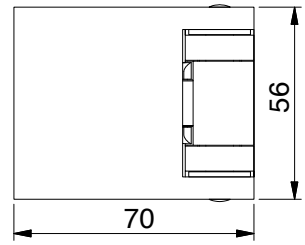

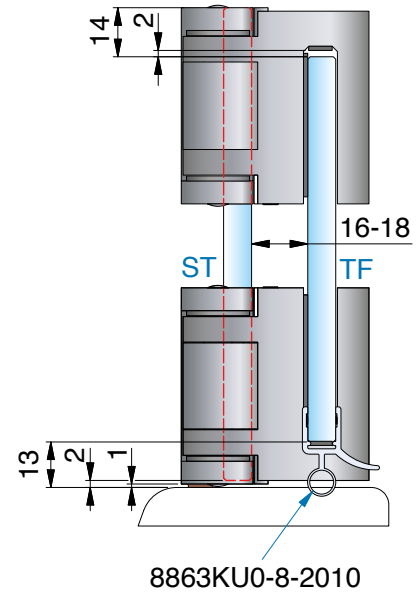

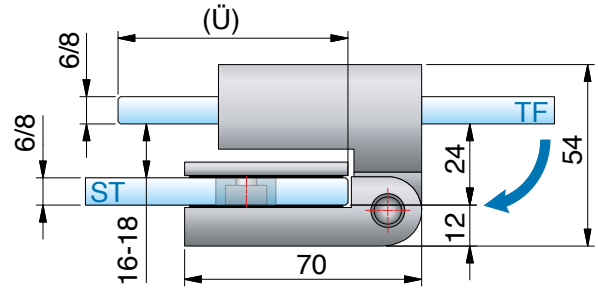





ST = side panel I TF = door panel I W = wall

8190ZN-BS Glas-Glas 180°, overlapping

MADE IN GERMANY

glass processing for 6/8 mm glass

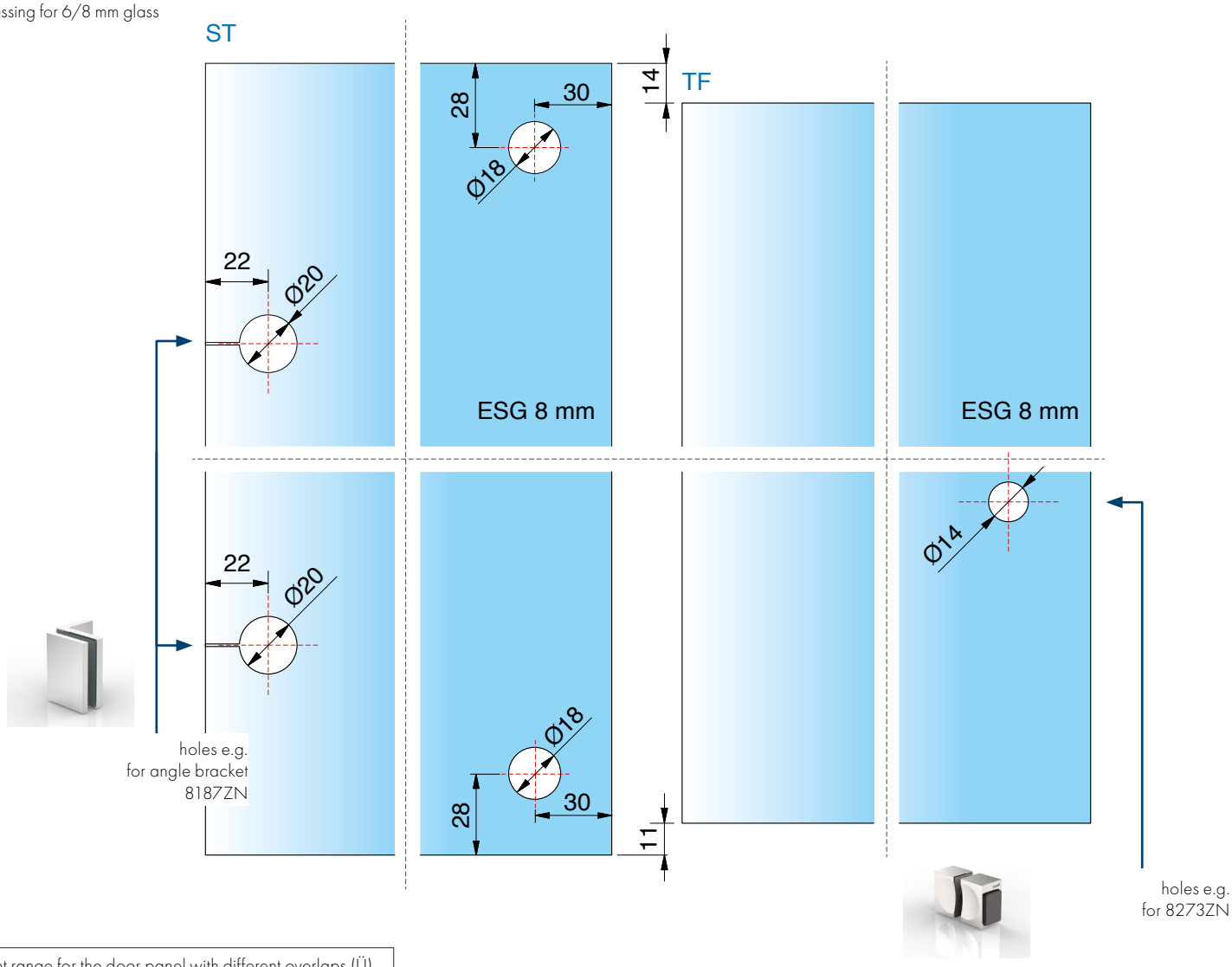

adjustment range for the door panel with different overlaps (Ü). the minimum overlapping should not be exceeded.	
overlap (Ü) in mm	adjustable in mm
minimum 80	± 10
100	± 30
120	± 50
recommended 150	± 80
180	± 110
200	± 130
250	± 180

ST = side panel I TF = door panel I Ü = overlap I ESG = thermally tempered glass

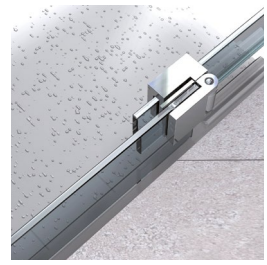

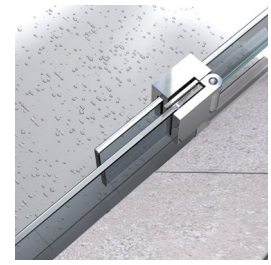

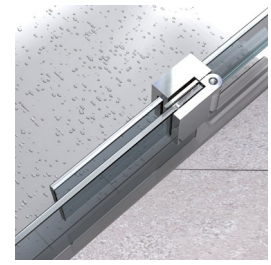

8192ZN-BS Glas-Glas 180°, overlapping

MADE IN GERMANY

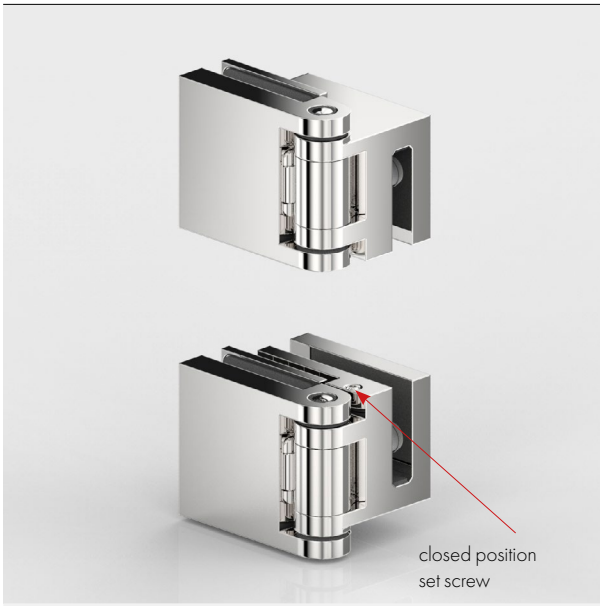

article no.	glass thickness
8192ZN__-BS	6/8 mm

finish

	ZN5	gloss chrome



features

opening outwards 180°, use with seal profile 8864KU0-8-2010 and splash guard 8535E

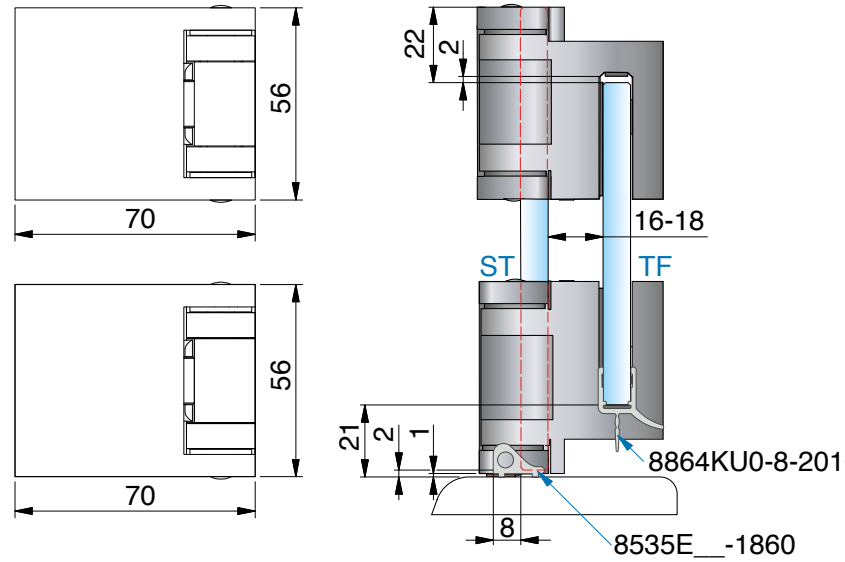

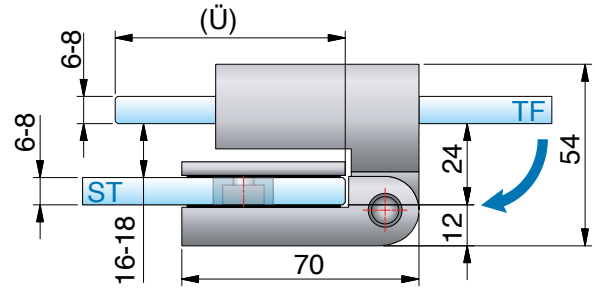

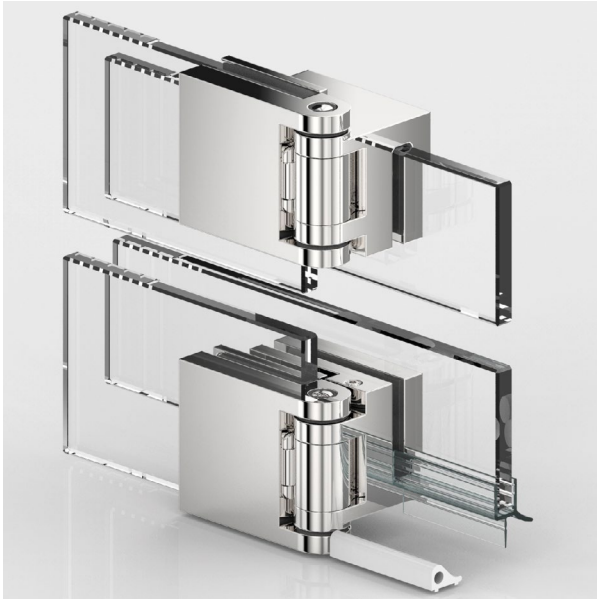

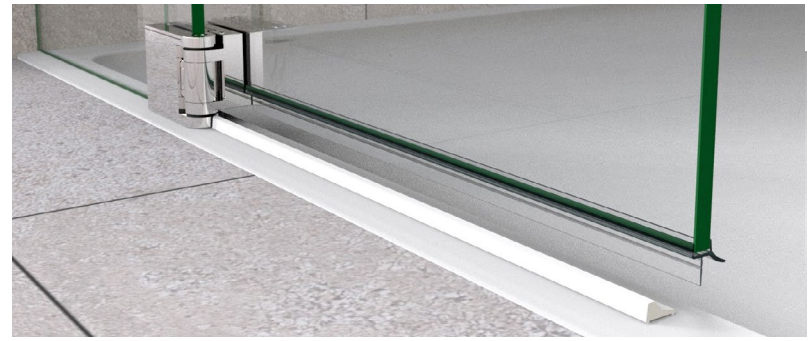

ST = side panel I TF = door panel I W = wall

8192ZN-BS Glas-Glas 180°, overlapping

MADE IN GERMANY

glass processing for 6/8 mm glass

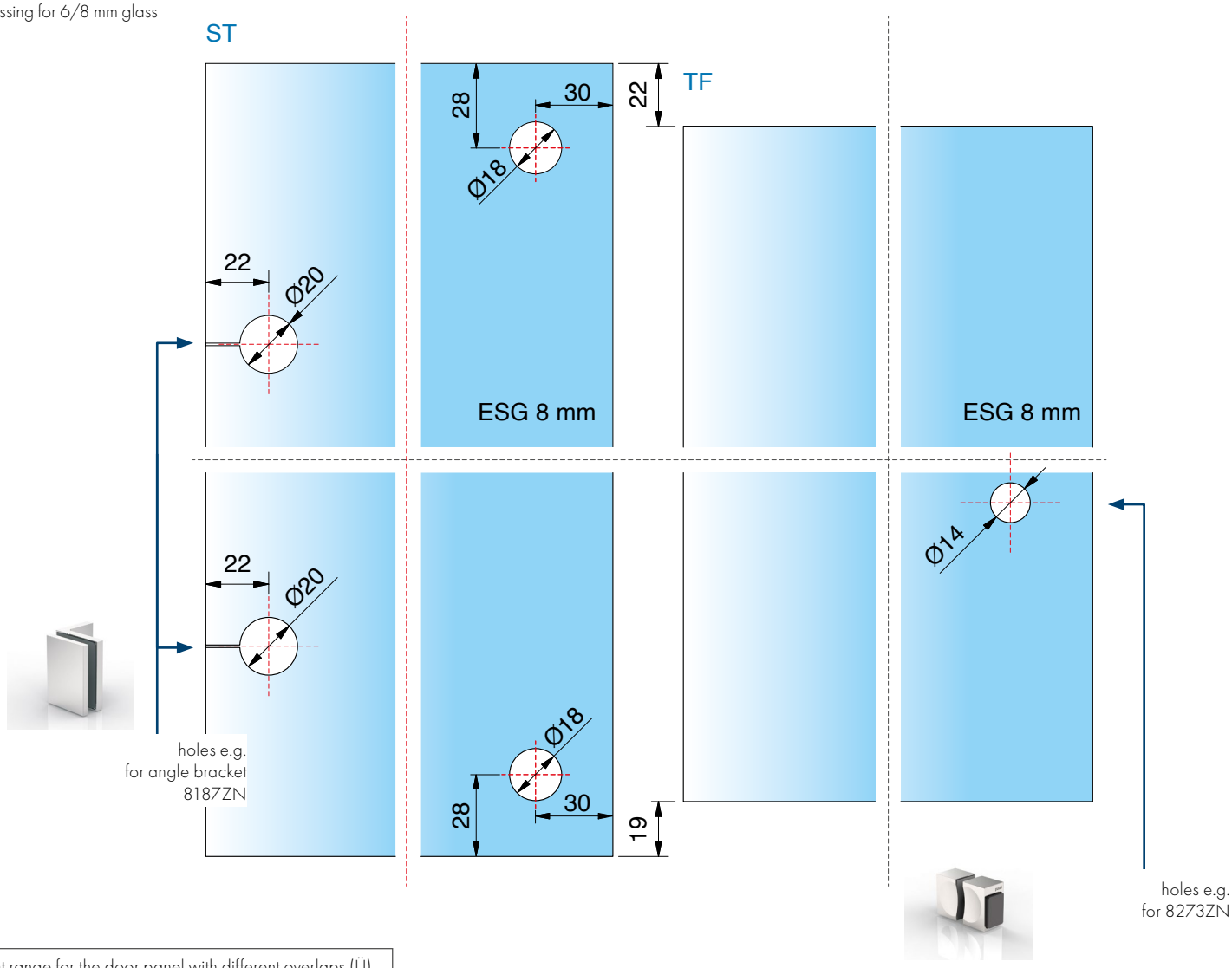

adjustment range for the door panel with different overlaps (Ü). the minimum overlapping should not be exceeded.	
overlap (Ü) in mm	adjustable in mm
minimum 80	± 10
100	± 30
120	± 50
recommended 150	± 80
180	± 110
200	± 130
250	± 180

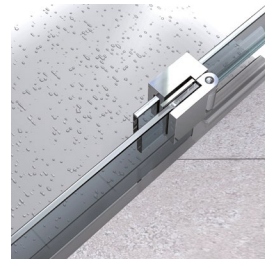
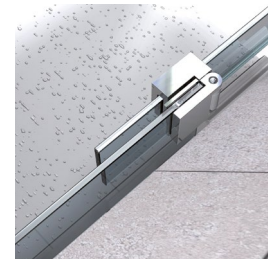
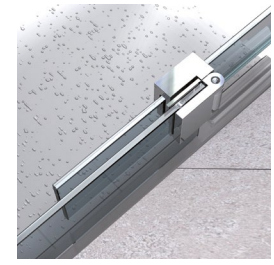

ST = side panel I TF = door panel I Ü = overlap I ESG = thermally tempered glass



Illustration shows FARDELLO in special colour

angle brackets

FLAMEA pro mini, FLAMEA, FARDELLO, FLINTER, NIVELLO and FLUTURE

8187ZN glass-wall 90°

MADE IN GERMANY



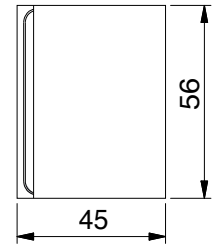

features: fixed, wall mounting with oblong hole, with cover plate

article no.	glass thickness
8187_	6/8/10 mm



finish:

	ZN5	gloss chrome
	ZNPVD22	stainless steel optic
	ZN134	white matt
	ZN135	deep black matt
	ZNPVD39	gold bronze brushed
	ZNPVD40	gold optic brushed
	ZNPVD41	copper optic brushed
	ZNPVD42	graphite metal optic brushed

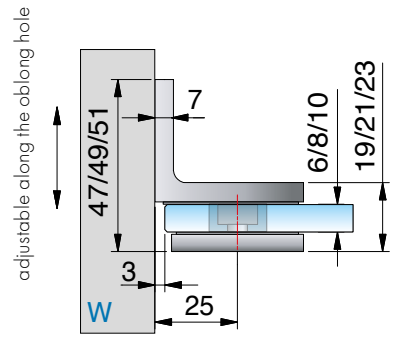

hole ø 20 mm or edge recess R35
glass processing for 6/8/10 mm glass.

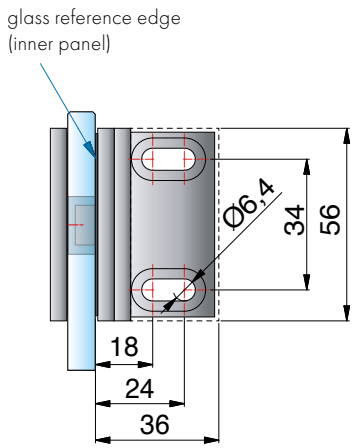

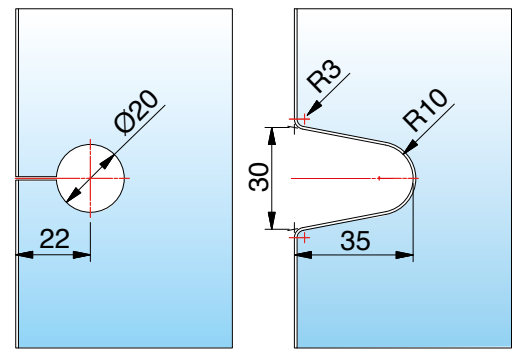

8170ZN glass-wall 90°

MADE IN GERMANY



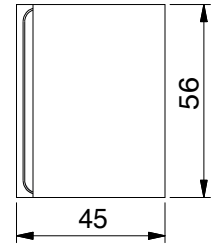

features: fixed, wall mounting with oblong hole

article no.	glass thickness
8170_	6/8/10 mm

finish:

ZN5 gloss chrome

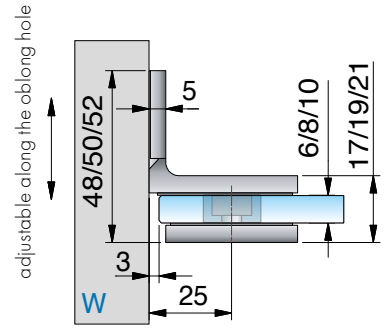

hole ø 20 mm or edge recess R35
glass processing for 6/8/10 mm glass.

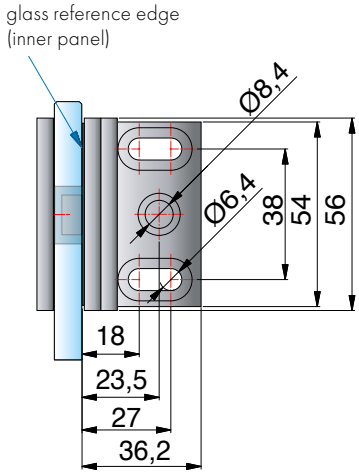

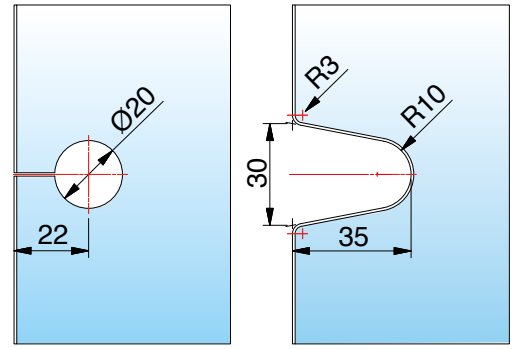

8171ZN glass-wall 90°

MADE IN GERMANY



article no.	glass thickness
8171_	6/8/10 mm

finish:

	ZN5	gloss chrome
	ZNPVD22	stainless steel optic

*You can request the glass processing for 6/10 mm glass from our technical department.

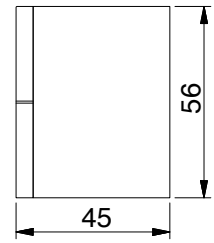

features: adjustable, wall mounting with oblong hole, degree of angle is fully adjustable between 60°-100°

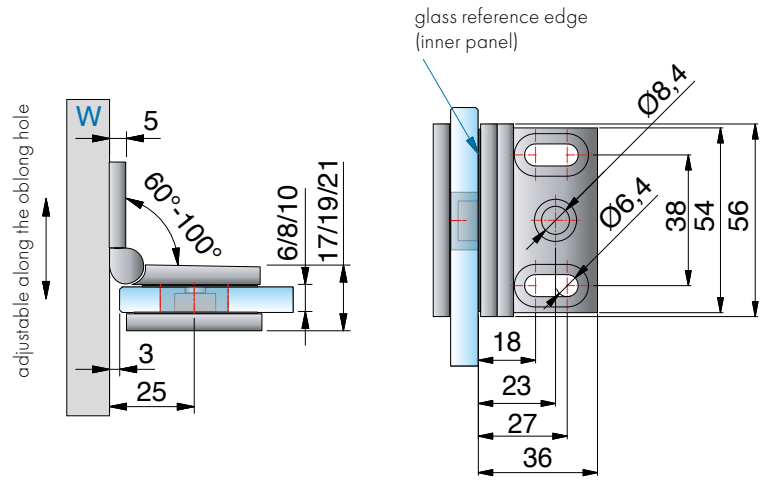

glass processing for 8 mm Glas
for other angles, the miter angle and/or the hole distance changes accordingly – see chart below.

miter angle and hole distances for 8171ZN			
corner	hole distance from glass edge	miter angle	remarks
60°	29 mm	30°	-
65°	28 mm	25°	-
70°	26 mm	20°	-
75°	25 mm	15°	hole slotted
80°	24 mm	10°	hole slotted
85°	23 mm	5°	hole slotted
90°	22 mm	without miter	hole slotted
95°	21 mm	5°	hole slotted
100°	21 mm	10°	hole slotted

hole ø 20 mm or edge recess R35 ø 20 mm or edge recess R35

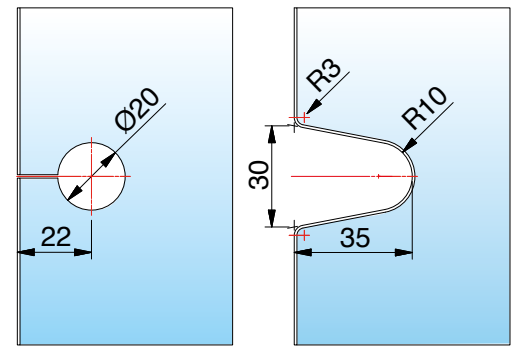

at 90° at 75°-100°

8173ZN glass-wall 135°

MADE IN GERMANY



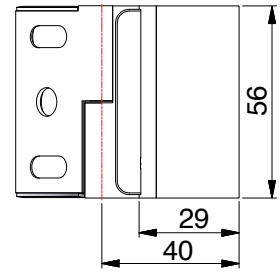

features: adjustable, wall mounting with oblong hole, degree of angle is fully adjustable between 100° – 140°

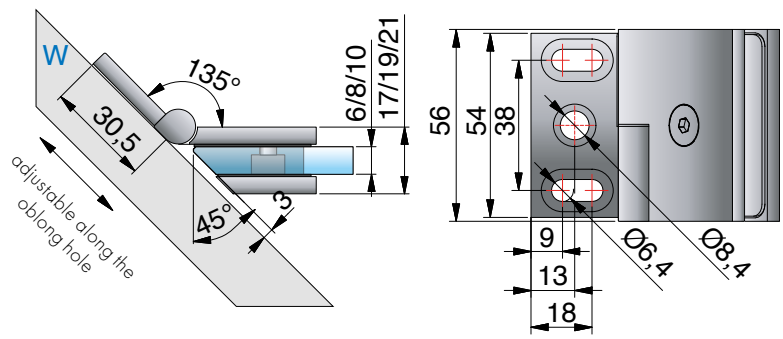

article no.		glass thickness
8173_		6/8/10 mm
finish:		
	ZN5	gloss chrome
	ZNPVD22	stainless steel optic

*You can request the glass processing for 6/10 mm glass from our technical department.

glass processing for 8 mm Glas
for other angles, the miter angle and/or the hole distance changes accordingly – see chart below.

miter angle and hole distances for 8173ZN

corner	hole distance from glass edge	miter angle	remarks
100°	21 mm	10°	hole slotted
105°	20 mm	15°	
110°	19 mm	20°	
115°	19 mm	25°	
120°	18 mm	30°	
125°	17 mm	35°	hole slotted or edge recess R30
130°	-	40°	edge recess R30
135°	-	45°	edge recess R30
140°	-	50°	edge recess R30

hole at 100°

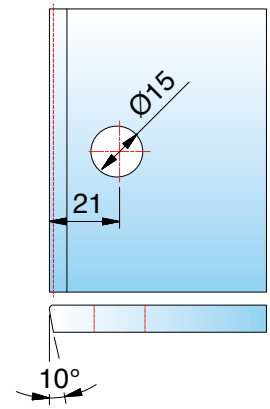

at 100°-125°

edge recess R30 at 135°

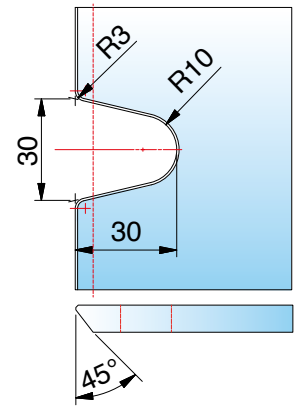

at 125°-140°

8174ZN glass-wall 180°

MADE IN GERMANY



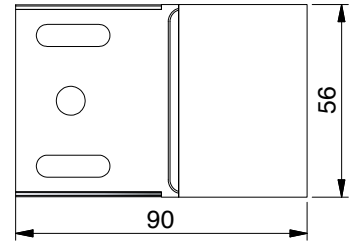

features: fixed, wall mounting with oblong hole, with cover plate

article no.	glass thickness
8174_	6/8/10 mm

finish:

ZN5	gloss chrome
ZNPVD22	stainless steel optic

*You can request the glass processing for 6/10 mm glass from our technical department.

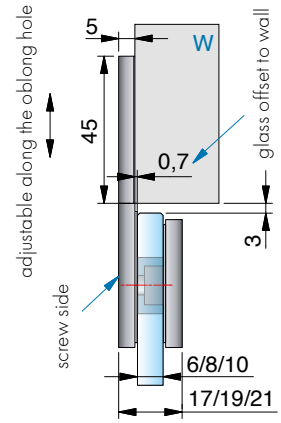

hole Ø 20 mm or edge recess R35
glass processing for 6/8/10 mm

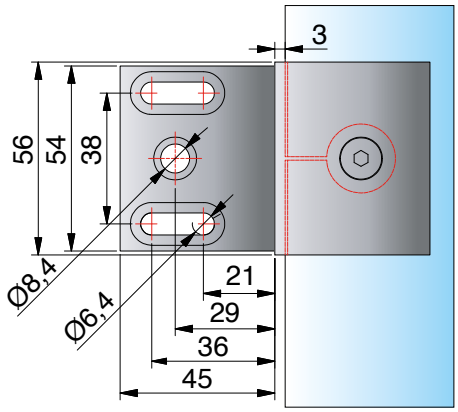

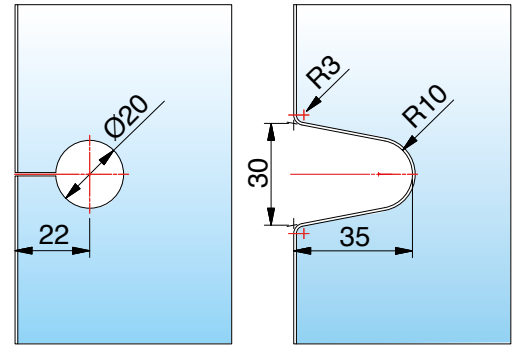

8178ZN glass-wall 90°

MADE IN GERMANY



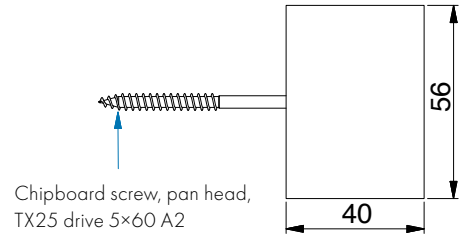

article no.		glass thickness
8178_		6/8/10 mm
finish:		
	ZN5	gloss chrome
	ZNPVD22	stainless steel optic

features: fixed wall mounting with oblong hole with cover plate without visible mounting plate mounting screw included

*You can request the glass processing for 6/10 mm glass from our technical department.

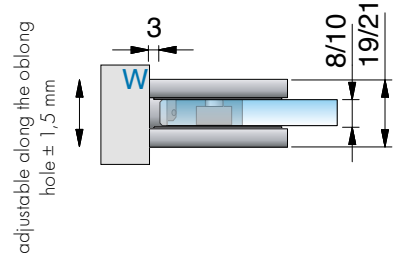

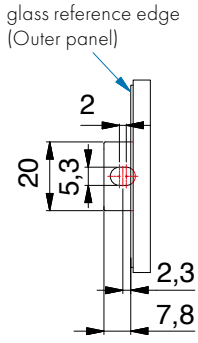

glass processing for 8/10 mm

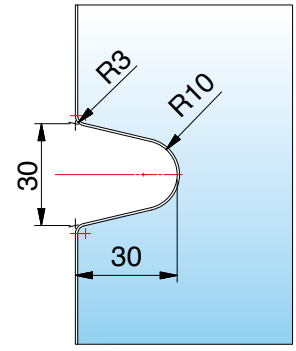

8188ZN glass-glass 90°

MADE IN GERMANY

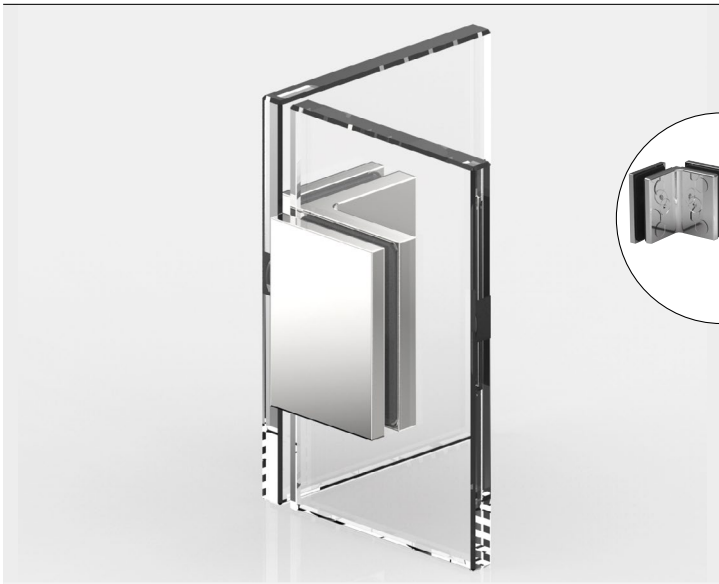

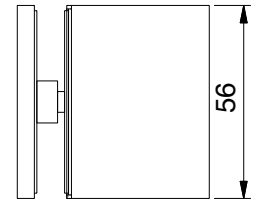

features: fixed, with cover plate

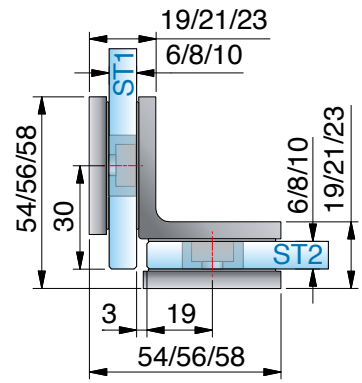

article no.	glass thickness
8188_	6/8/10 mm



finish:		
	ZN5	gloss chrome
	ZNPVD22	stainless steel optic
	ZN134	white matt
	ZN135	deep black matt
	ZNPVD39	gold bronze brushed
	ZNPVD40	gold optic brushed
	ZNPVD41	copper optic brushed
	ZNPVD42	graphite metal optic brushed

*You can request the glass processing for 6/10 mm glass from our technical department.

glass processing for 8 mm

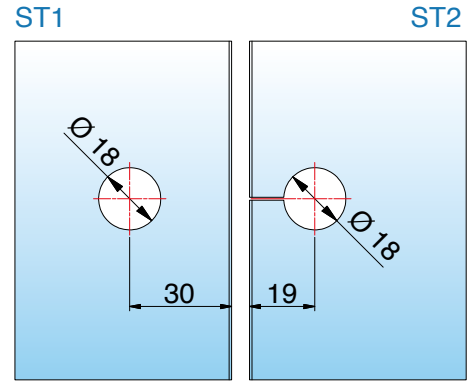

8172ZN glass-glass 90°

MADE IN GERMANY

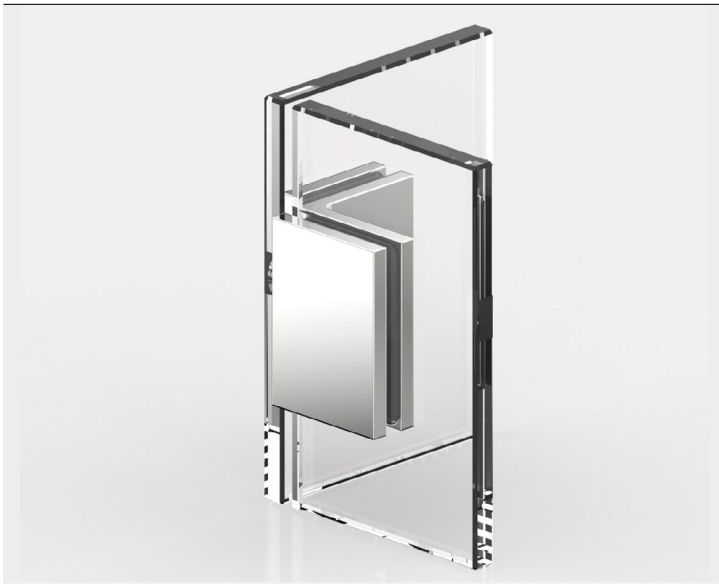

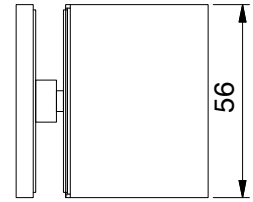

article no.		glass thickness
8172_		6/8/10 mm
finish:		
	ZN5	gloss chrome

1/2

features: fixed, with cover plate

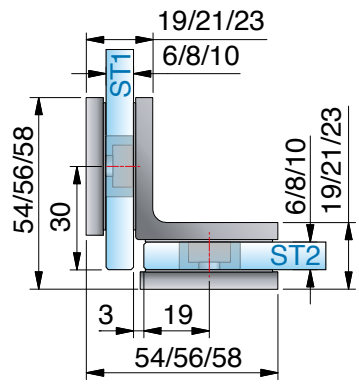

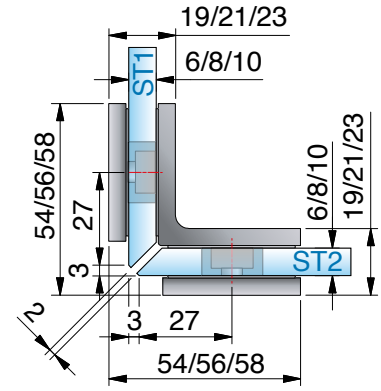

*You can request the glass processing for 6/10 mm glass from our technical department.

glass processing for 8 mm

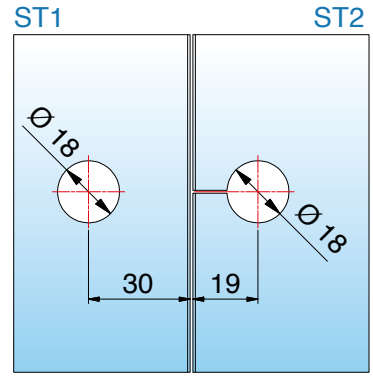

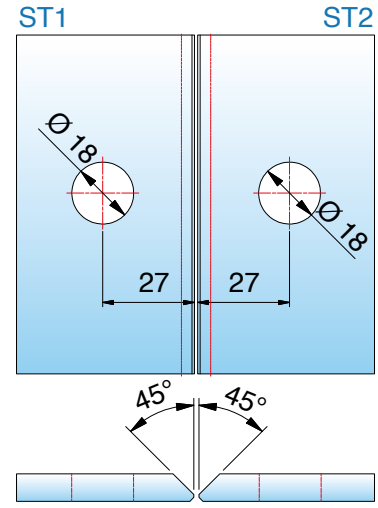

8175ZN glass-glass 135°

MADE IN GERMANY



article no.		glass thickness
8175_		6/8/10 mm
finish:		
ZN5	gloss chrome	
ZNPVD22	stainless steel optic	



features: adjustable, degree of angle is fully adjustable between 80°– 180°
*You can request the glass processing for 6/10 mm glass from our technical department.

glass processing for 8 mm Glas
for other angles, the miter angle and/or the hole distance changes accordingly – see chart on page 275.

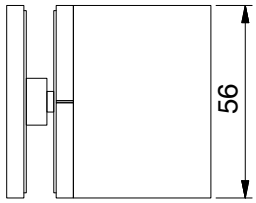

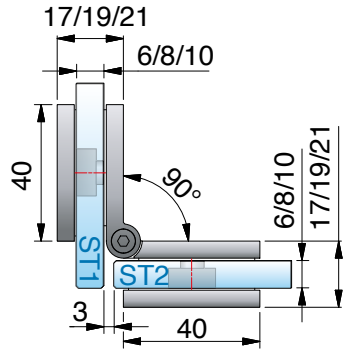

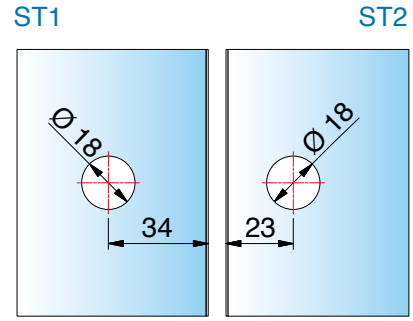

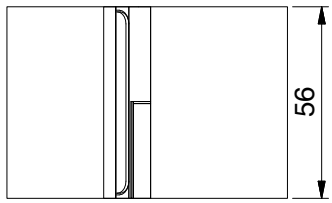

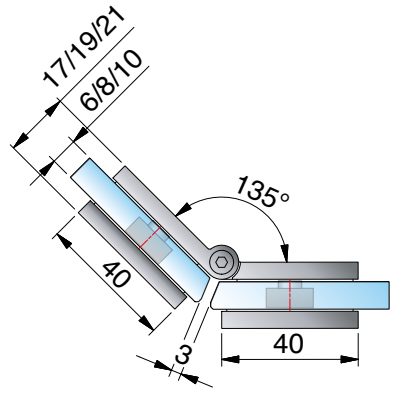

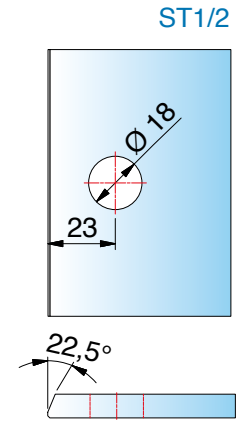

8175ZN glass-glass 135°

MADE IN GERMANY

miter angle and hole distances for 8175ZN

corner	hole distance from glass edge	miter angle	remarks
80°	32 mm	50°	-
85°	31 mm	47,5°	-
90°	30 mm	45°	-
95°	29 mm	42,5°	-
100°	28 mm	40°	hole slotted
105°	27 mm	37,5°	hole slotted
110°	26 mm	35°	hole slotted
115°	26 mm	32,5°	hole slotted
120°	25 mm	30°	hole slotted
125°	24 mm	27,5°	hole slotted
130°	24 mm	25°	hole slotted
135°	23 mm	22,5°	hole slotted
140°	23 mm	20°	hole slotted
145°	22 mm	17,5°	hole slotted
150°	22 mm	15°	hole slotted
155°	21 mm	12,5°	hole slotted
160°	21 mm	10°	hole slotted
165°	20 mm	7,5°	hole slotted
170°	20 mm	5°	hole slotted
175°	19 mm	0°	hole slotted
180°	19 mm	0°	hole slotted











sauna-hinges

MADE IN GERMANY

	NEW	NEW		
				
	PONTERE⁺ SN page 362	**FLAMEA** pro **SN** page 380	**FLAMEA⁺ SN** page 392	**TURA SN** page 406
base material	ZAMAK®	ZAMAK®	ZAMAK®	ZAMAK®
load capicity of two hinges	36 kg	34 kg	30–36 kg	50 kg
maximum door width	900 mm	850 mm	750-900 mm	1200 mm
lifting function				
swing door	✓	✓	✓	
striker door				✓
overlapping door				
sliding door				
suitable for sauna applications	✓	✓	✓	✓
seal without notching				✓
installation without seal possible	✓	✓	✓	
adjustable closed position	✓	✓	✓	
self-closing during the final cm	✓	✓	✓	✓
concealed wall mount	✓	✓	✓	✓
concealed screws	✓	✓	✓	✓
flush screws				
wall mount with oblong holes	✓	✓	✓	✓
adjustable angle bracket				
shower sets with curved glass doors possible				✓

With sauna hinges from Pauli + Sohn, you can plan your own individual wellness oases – from small private saunas to spacious sauna areas. Our hinges, which are specially designed for saunas, retain their first-class functionality even at ambient temperatures of up to 100°C. This has been proven by our strict in-house tests with the maximum permissible door dimensions.

The hinges **must not be used in rooms with high chlorine and alkali content,** as this will cause lasting damage to the surfaces and mechanics. For applications with our shower hinges in swimming pool and sauna areas or in the vicinity of saltwater pools and steam saunas, **please contact our application technology department before installation.**

MADE IN GERMANY

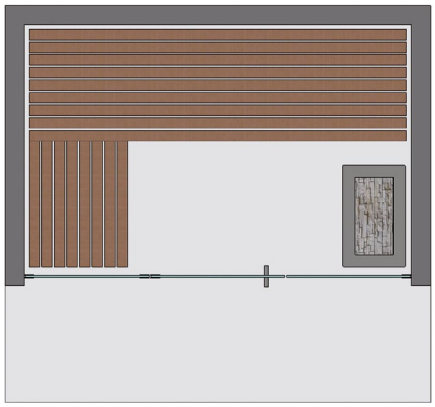

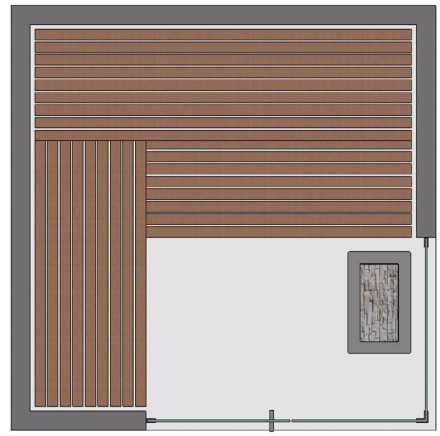

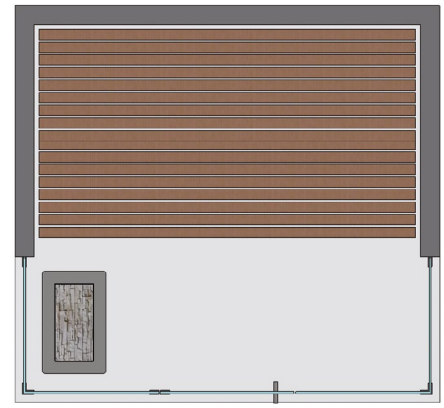

many different installation situations are possible.
when planning the system, make sure that the door panels are not to be over-opened (max.90°)!
together, we can plan tailor-made solutions. - contact us!

- max. temperature in height of the upper hinge (on the surface)
  80°C (corresponds a general sauna heat adjustment temperature of 100°C)
- sauna pendulum hinges and glass are to be protected against damage. therefore, when planning sauna situations, take into account that the door panels are not over pressed during opening (maximum 90 °).





care instructions

The sauna hinges are to be cleaned only using warm water and a soft nonabrasive cloth for cleaning and drying. Sharp, aggressive, abrasive, alkaline or chlorine containing cleaners may not be used. While cleaning, the door must be held with one hand to prevent over opening.
For heavier stains (lime, grease, soap) we recommend our special cleaning agent **(art. no 8203CTP)** on page Seite 671.
The door must be held firmly with one hand during cleaning to prevent over opening.

available **surface colors**

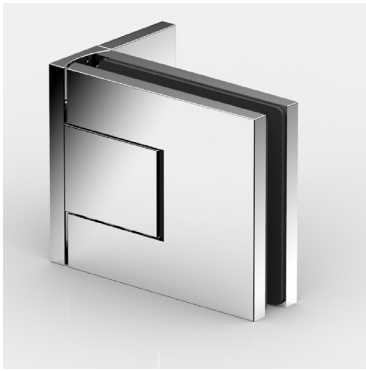

ZN5
gloss chrome

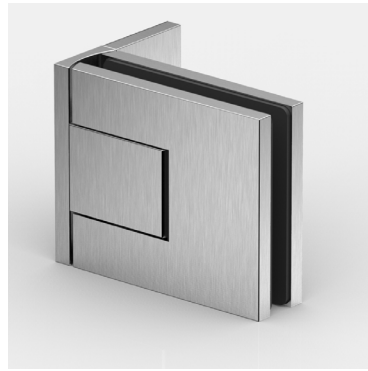

ZNPVD22
stainless steel optic

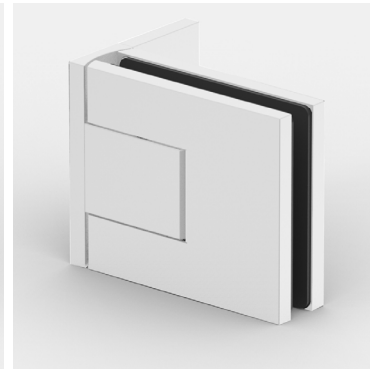

ZN134
white matt

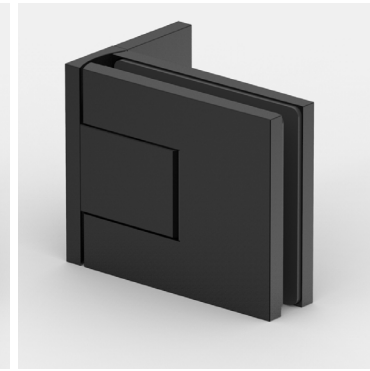

ZN135
deep black matt



ZNPVD39
gold bronze brushed

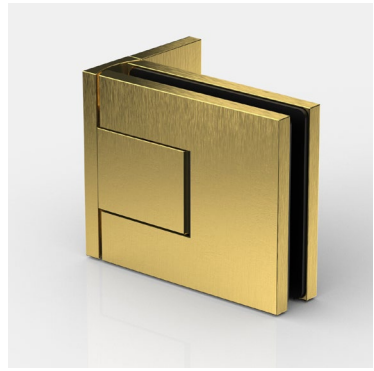

ZNPVD40
gold optic brushed



ZNPVD41
copper optic brushed



ZNPVD42
graphite metal optic brushed

compatibility chart for fittings manufacturer colors see page 14



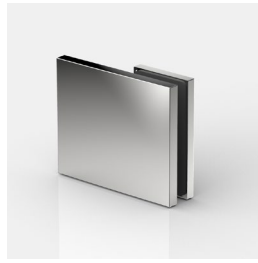

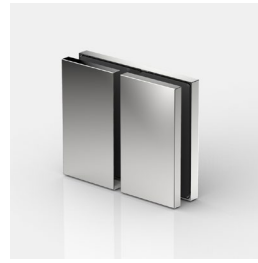



corresponding **angle brackets**

for PONTERE+ can be found on page 376.

MADE IN GERMANY



PONTERE+

sauna swing door hinge



PONTERE+ SAUNA – relentlessly and heat-resistant

MADE IN GERMANY

- glass thickness: 8/10 mm
- 90° opening in both directions
- minimized gap distances for the installation in a sauna
- self-closing during the last
- max. Temperatur in Beschlaghöhe oben 80°C (entsprach bei Wertfestlegung einer Saunatemperatureinstellung von 100°C)

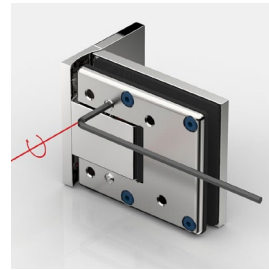

- **fully adjustable closed position**

- präzise **von außen** einstellbar und bessere Erkennung der exakten Nulllage
  - Eintreten in die Dusche entfällt

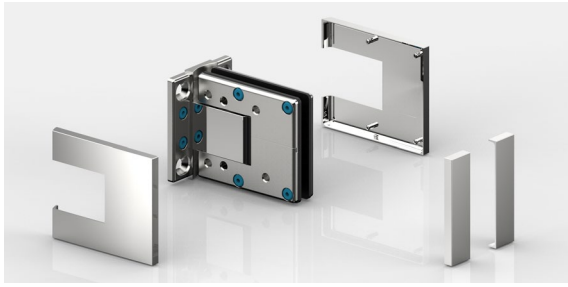

- **mit montagefreundlicher Abdeckung:**
  Zum Fixieren der Abdeckkappen werden die Zapfen der Abdeckkappe in die vormontierten EPDM-Aufnahmen der Gegenplatte gedrückt. Die Kappen haben im aufgesteckten Zustand einen sicheren Halt.



- **mittig liegender Drehpunkt** und daher als Pendeltür nutzbar



8314ZN_-SN

- max. door width 900 mm
- loading capacity (2 hinges): 36 kg (corresponding to a glass door with the dimension 900 x 2000 mm and a glass thickness of 8 mm)



8312ZN_-SN

- max. door width 900 mm
- loading capacity (2 hinges): 36 kg (corresponding to a glass door with the dimension 900 x 2000 mm and a glass thickness of 8 mm)



8313ZN_-SN

- max. door width 900 mm
- loading capacity (2 hinges): 40 kg (corresponding to a glass door with the dimension 900 x 2000 mm and a glass thickness of 8 mm)



8315ZN_-SN

- max. door width 900 mm
- loading capacity (2 hinges): 36 kg (corresponding to a glass door with the dimension 900 x 2000 mm and a glass thickness of 8 mm)

8314ZN-SN glass-wall 90°

MADE IN GERMANY



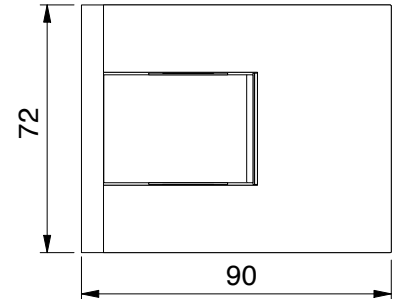

features

115° opening in both directions, one-sided mounting bracket, oblong hole, slotted hole adjustment with cover cap, infinitely adjustable closed-position, self-closing on the last centimetres, sealing profile interrupted on the hardware side in the hinge area.
Load capacity (2 hinges) 50 kg (max. door panel width 1000 mm)

*important

when using the hinges for 6 or 10 mm glass, please order the insert-set art. no. HX-SET15 free of charge.
You can request the glass processing for 10 mm glass from our technical department.

article no	glass thickness
8314__-SN	8/10 mm

finish		
	ZN5	gloss chrome
	ZNPVD22	stainless steel optic
	ZN134	white matt
	ZN135	deep black matt
	ZNPVD39	gold bronze brushed
	ZNPVD40	gold optic brushed
	ZNPVD41	copper optic brushed
	ZNPVD42	graphite metal optic brushed



glass reference edge
(inner panel with 8 mm glass)

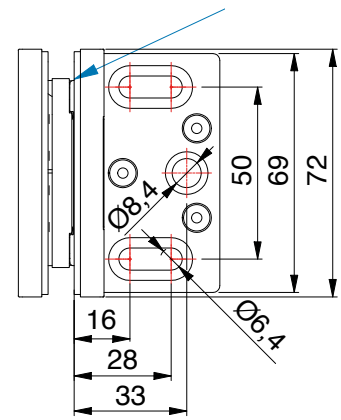

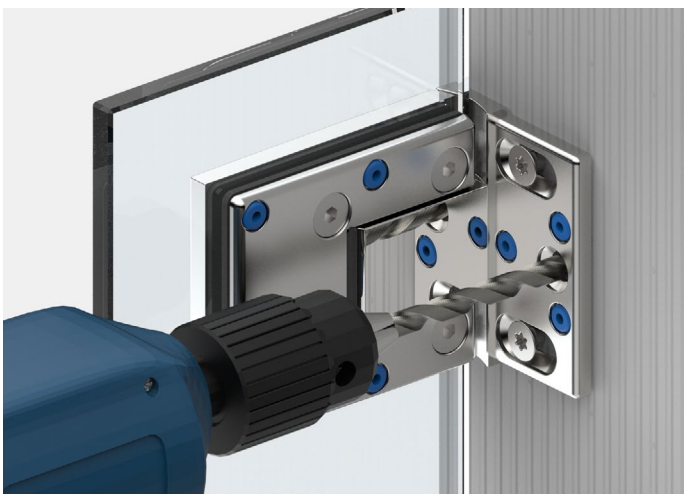

The 3rd fixing hole prevents the fittings from twisting on the wall. The shower hinge is designed in such a way that this hole can be drilled with an 8 mm drill bit while mounted.

8314ZN-SN glass-wall 90°

MADE IN GERMANY



* for 8 mm glass

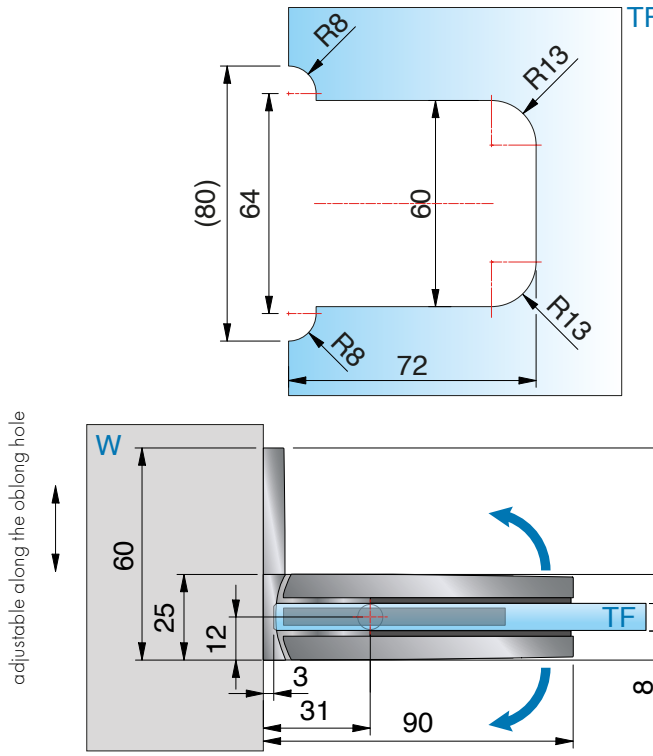

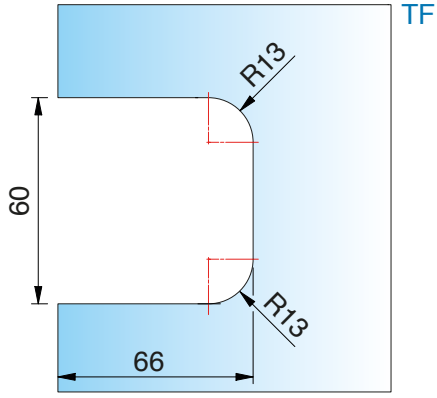

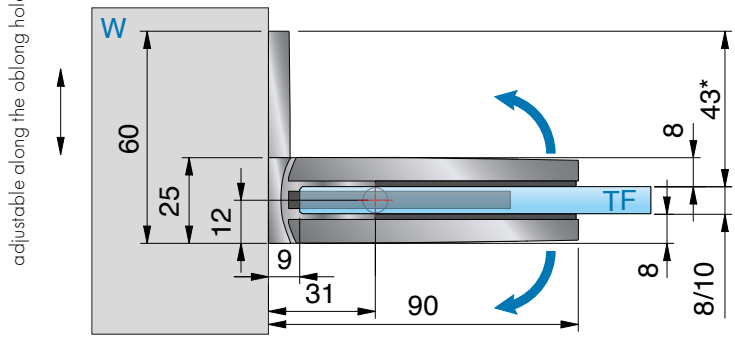

ST = side panel I TF = door panel I W = wall

8313ZN-SN glass-wall 90°

MADE IN GERMANY



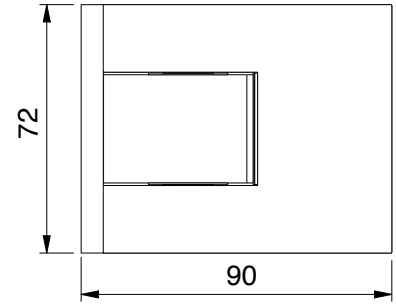

features

115° opening in both directions, one-sided mounting bracket, oblong hole, slotted hole adjustment with cover cap, infinitely adjustable closed-position, self-closing on the last centimetres, sealing profile interrupted on the hardware side in the hinge area.
Load capacity (2 hinges) 50 kg (max. door panel width 1000 mm)

*important

when using the hinges for 10 mm glass, please order the insert-set art. no. HX-SET15 free of charge.
You can request the glass processing for 10 mm glass from our technical department.

article no	glass thickness
8313__-SN	8/10 mm

finish	
ZN5	gloss chrome
ZNPVD22	stainless steel optic
ZN134	white matt
ZN135	deep black matt
ZNPVD39	gold bronze brushed
ZNPVD40	gold optic brushed
ZNPVD41	copper optic brushed
ZNPVD42	graphite metal optic brushed

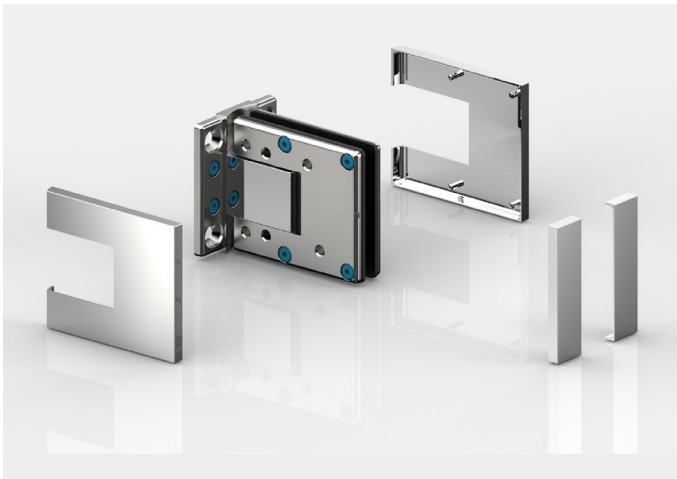

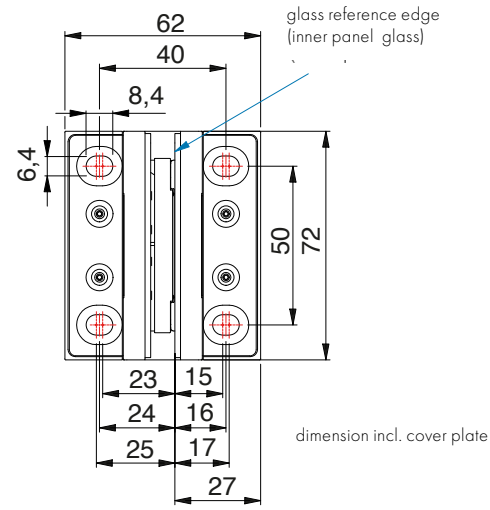

8313ZN-SN glass-wall 90°

MADE IN GERMANY



without seal profile, for 8 mm glass

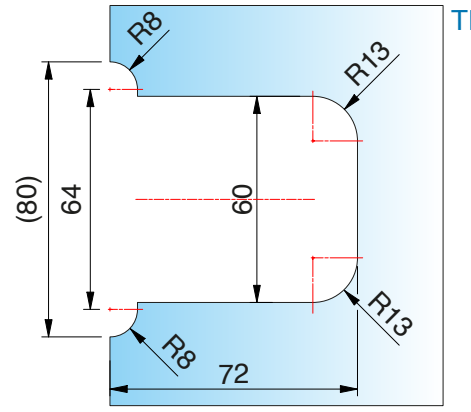

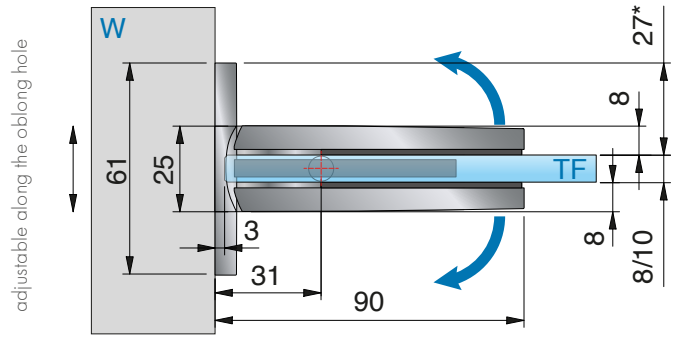

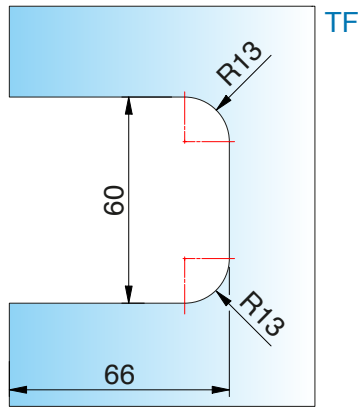

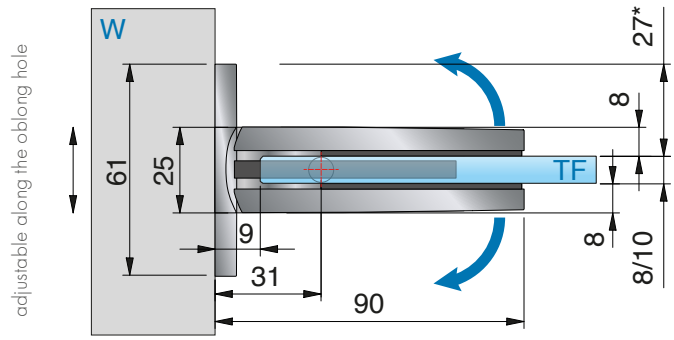

ST = side panel I TF = door panel I W = wall

8312ZN-SN glass-glass 180°

MADE IN GERMANY



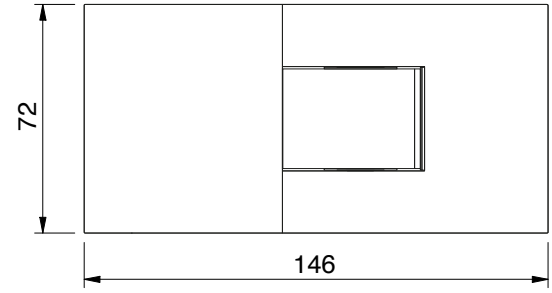

article no	glass thickness
8312__-SN	8/10 mm



finish		
	ZN5	gloss chrome
	ZNPVD22	stainless steel optic
	ZN134	white matt
	ZN135	deep black matt
	ZNPVD39	gold bronze brushed
	ZNPVD40	gold optic brushed
	ZNPVD41	copper optic brushed
	ZNPVD42	graphite metal optic brushed

features

115° opening in both directions, adjustment with cover cap, infinitely adjustable closed-position, self-closing on the last centimetres, sealing profile interrupted on the hardware side in the hinge area, Load capacity (2 hinges) 50 kg (max. door panel width 1000 mm)

*important

when using the hinges for 10 mm glass, please order the insert-set art. no. HX-SET14 free of charge.
You can request the glass processing for 10 mm glass from our technical department.

8312ZN-SN glass-glass 180°

MADE IN GERMANY



without seal profile, for 8 mm glass

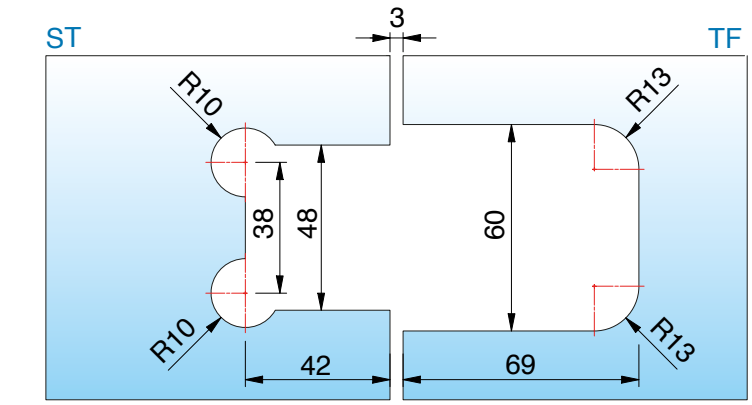

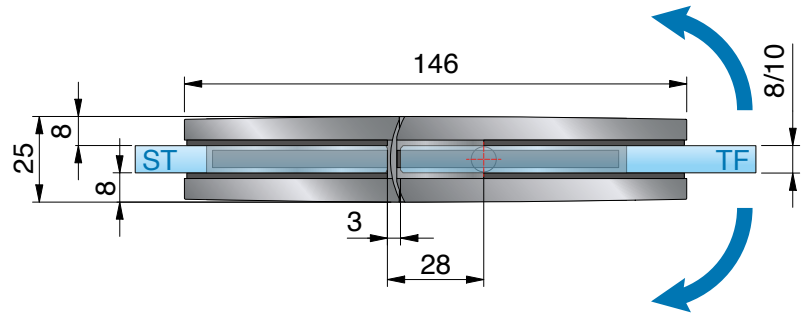

PONTERE+ SAUNA

ST = side panel I TF = door panel I W = wall

8312ZN-SN glass-glass 180°

MADE IN GERMANY



without seal profile, for 8 mm glass

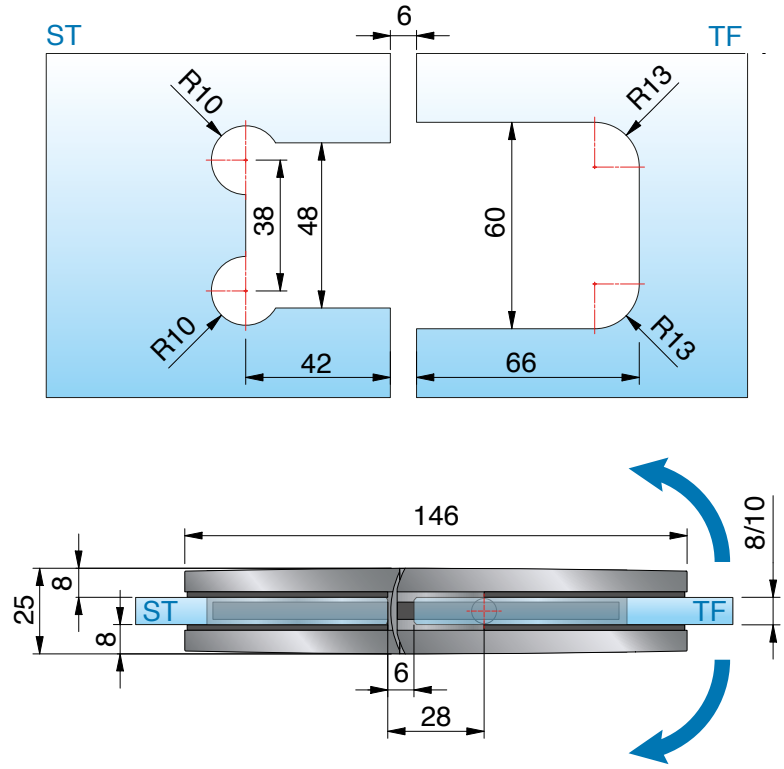



enlarged opening angle: opening angle of the hinge 115° possible on both sides

8312ZN-SN glass-glass 180°

MADE IN GERMANY



without seal profile, for 8 mm glass

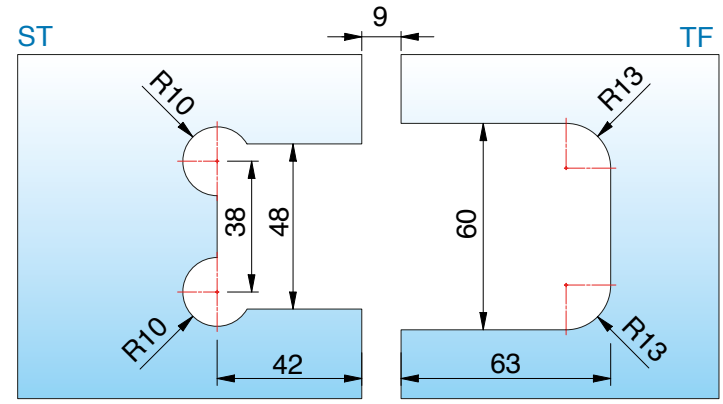

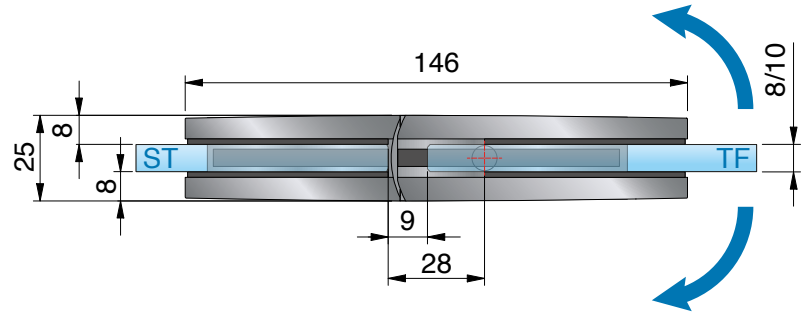





care instructions

The sauna hinges are to be cleaned only using warm water and a soft nonabrasive cloth for cleaning and drying. Sharp, aggressive, abrasive, alkaline or chlorine containing cleaners may not be used. While cleaning, the door must be held with one hand to prevent over opening.

For heavier stains (lime, grease, soap) we recommend our special cleaning agent **(art. no 8203CTP)** on page Seite 671.

The door must be held firmly with one hand during cleaning to prevent over opening.

ST = side panel I TF = door panel I W = wall

8315ZN-SN glass-glass 90°

MADE IN GERMANY



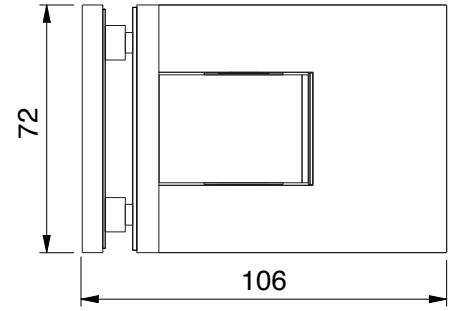

features

115° opening in both directions, one-sided mounting bracket, with cover cap, infinitely adjustable closed-position, self-closing on the last centimetres, sealing profile interrupted on the hardware side in the hinge area, Load capacity (2 hinges) 50 kg (max. door panel width 1000 mm)

article no	glass thickness
8315__-SN	8/10 mm



finish		
	ZN5	gloss chrome
	ZNPVD22	stainless steel optic
	ZN134	white matt
	ZN135	deep black matt
	ZNPVD39	gold bronze brushed
	ZNPVD40	gold optic brushed
	ZNPVD41	copper optic brushed
	ZNPVD42	graphite metal optic brushed

*important

when using the hinges for 10 mm glass, please order the insert-set art. no. HX-SET15 free of charge.
You can request the glass processing for 10 mm glass from our technical department.

8315ZN-SN glass-glass 90°

MADE IN GERMANY



without seal profile, for 8 mm glass

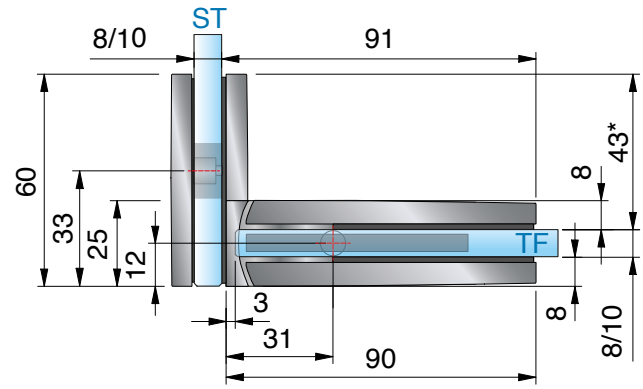

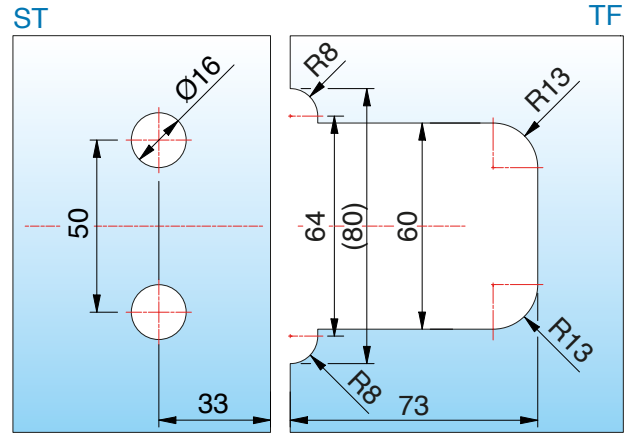

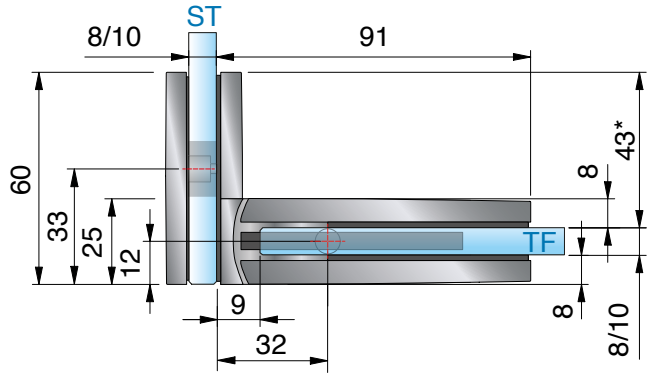

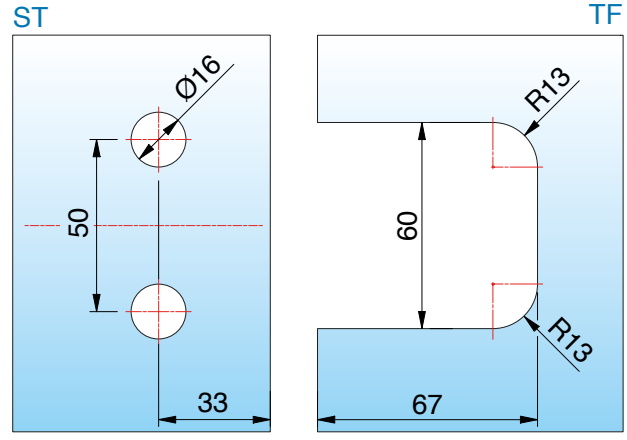

ST = side panel I TF = door panel I W = wall

8316ZN-SN glass-wall 90° - fixed

MADE IN GERMANY



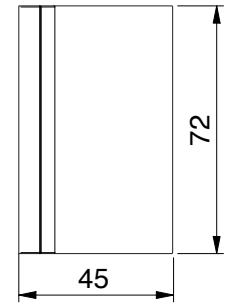

glass reference edge
(inner panel glass)

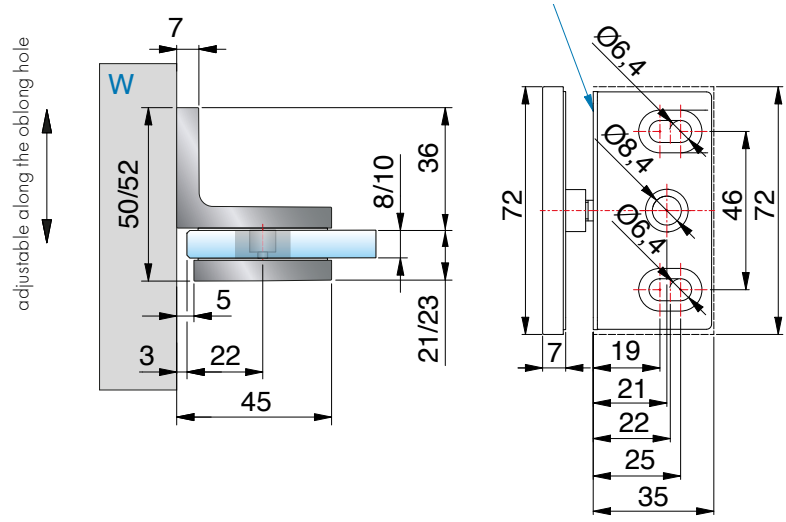

article no	glass thickness
8316__-SN	8/10 mm

finish	
ZN5	gloss chrome
ZNPVD22	stainless steel optic
ZN134	white matt
ZN135	deep black matt
ZNPVD39	gold bronze brushed
ZNPVD40	gold optic brushed
ZNPVD41	copper optic brushed
ZNPVD42	graphite metal optic brushed

features
wall bracket adjustable along the oblong hole



hole dimension Ø 20 mm or edge recess R35
glass processing for 8/10 mm

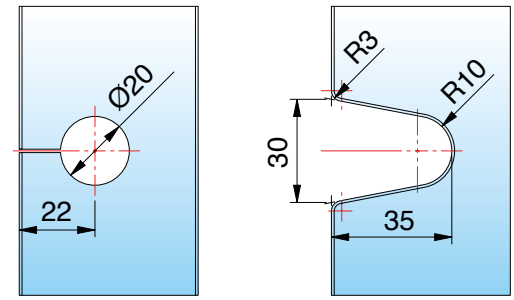

ST = side panel I TF = door panel I W = wall

PONTERE+ SAUNA

8318ZN-SN glass-wall 180° - fixed



article no	glass thickness
8318__-SN	8/10 mm

finish		
	ZN5	gloss chrome
	ZNPVD22	stainless steel optic
	ZN134	white matt
	ZN135	deep black matt
	ZNPVD39	gold bronze brushed
	ZNPVD40	gold optic brushed
	ZNPVD41	copper optic brushed
	ZNPVD42	graphite metal optic brushed



features
wall bracket adjustable along the oblong hole



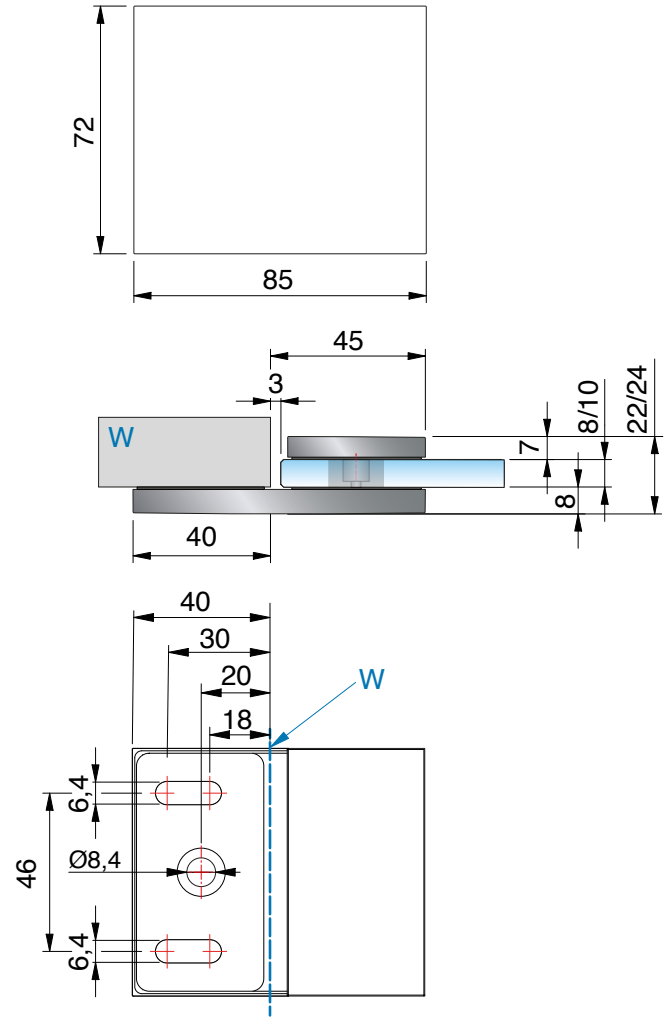

hole dimension Ø 20 mm
glass processing for 8/10 mm

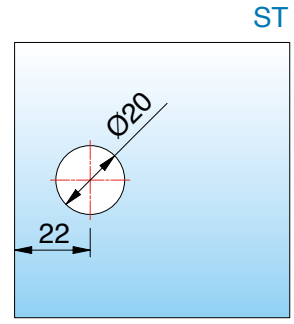

ST = side panel I TF = door panel I W = wall

8317ZN-SN Glas-Glas 90°

MADE IN GERMANY



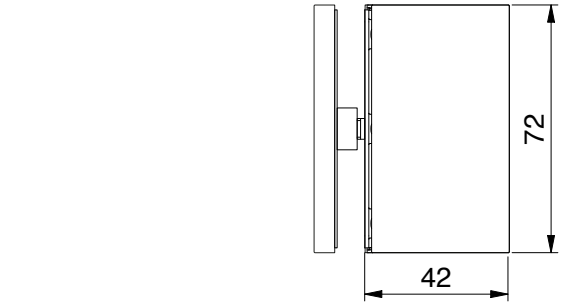

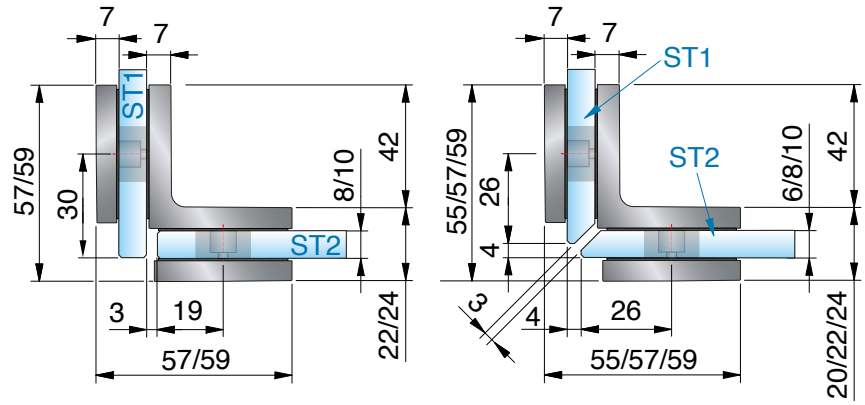

article no	glass thickness
8317__-SN	8/10 mm

finish	
ZN5	gloss chrome
ZNPVD22	stainless steel optic
ZN134	white matt
ZN135	deep black matt
ZNPVD39	gold bronze brushed
ZNPVD40	gold optic brushed
ZNPVD41	copper optic brushed
ZNPVD42	graphite metal optic brushed

hole dimension Ø 18 mm
glass processing for 8/10 mm



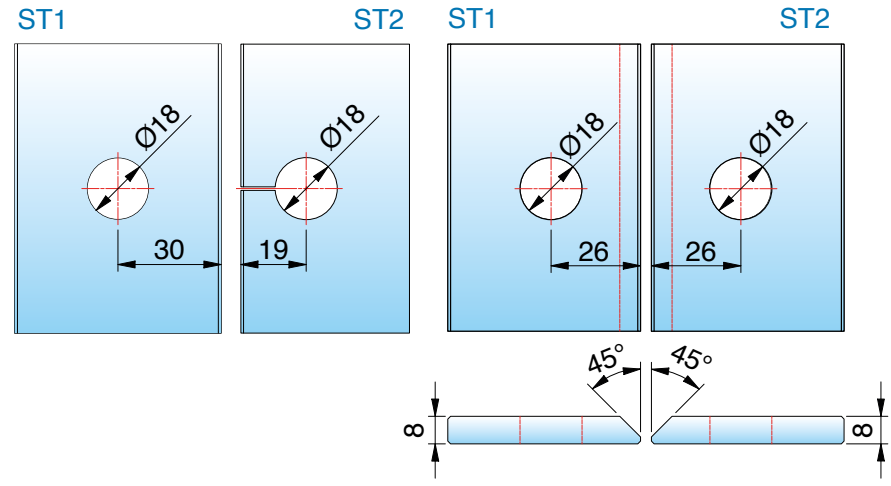

ST = side panel I TF = door panel I W = wall

PONTERE+ SAUNA

8319ZN-SN Glas-Glas 180°

MADE IN GERMANY



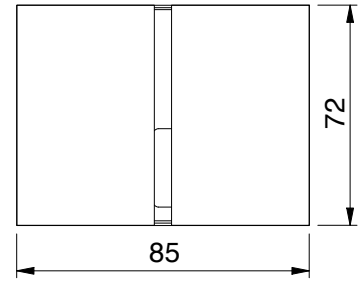

article no	glass thickness
8319__-SN	8/10 mm

finish		
	ZN5	gloss chrome
	ZNPVD22	stainless steel optic
	ZN134	white matt
	ZN135	deep black matt
	ZNPVD39	gold bronze brushed
	ZNPVD40	gold optic brushed
	ZNPVD41	copper optic brushed
	ZNPVD42	graphite metal optic brushed



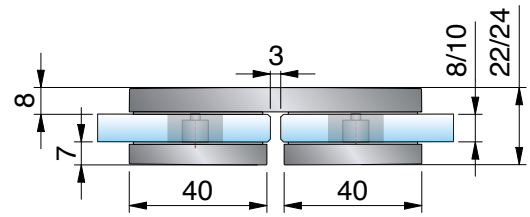

hole dimension Ø 20 mm
glass processing for 8/10 mm

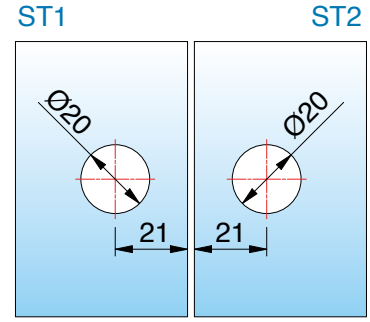



ST = side panel I TF = door panel I W = wall

available **surface colors**



ZN5
gloss chrome

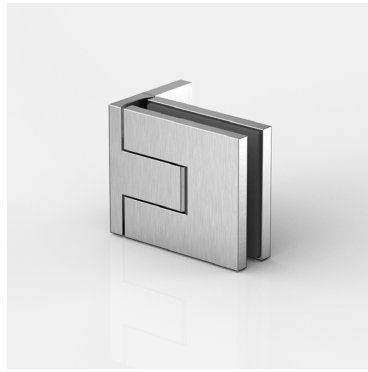

ZNPVD22
stainless steel optic

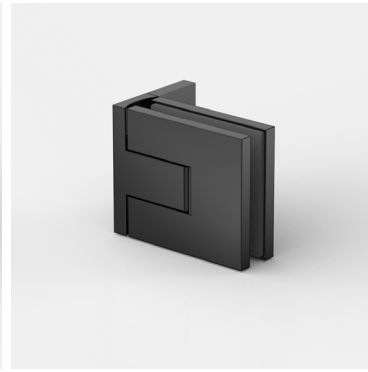

ZN135
deep black matt



ZNPVD39
gold bronze brushed



ZNPVD40
gold optic brushed

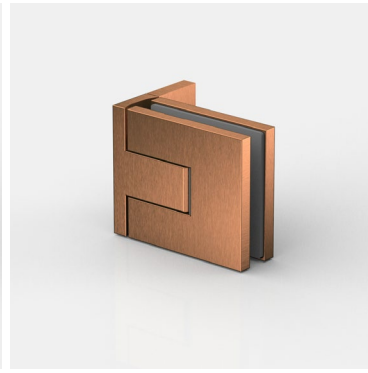

ZNPVD41
gold optic brushed



ZNPVD42
graphite metal optic brushed

compatibility chart for fittings manufacturer colors see page 14













corresponding **angle brackets**

for FLAMEA pro mini can be found on page 402.

MADE
IN
GERMANY



FLAMEA pro

sauna swing door hinge



FLAMEA pro – small format, high performance

MADE IN GERMANY

Flamea pro represents the next generation of our renowned Flamea+ shower door hinge.
Through continuous development and the application of ourextensive experience as a leading manufacturer of shower hardware,we ensure the highest technical standards.
The result is a product that stands out for its even greater reliability,sturdiness, and durability.
Installation convenience has been further optimized in many details to enable an even simpler, more reliable, and more cost-effective installation.
The timeless, minimalist design combines the highest aesthetic standards withmaximum user-friendliness and sets new benchmarks in shower and sauna design.

- Load capacity (2 hinges): max. allowable weight: 47 kg, max. door panel width: 1000 mm
- Glass thickness: 8/10 mm
- Swing door hinge: glass–wall / glass–glass
- Matching angle brackets
- Seal profile discontinued in the hinge area
- Optimized for installation even without seal profiles
- 97° opening angle in both directions for greater convenience
- Minimized gap dimensions
- Self-closing over the last few centimeters
- Convenient installation thanks to innovative cap technology
- Concealed closed-position adjustment
- Applications:
  Use in private residential construction, commercial buildings, and hotels
- Durability of the hardware tested through in-house trials in accordance with
  DIN EN 14428:2015/A1:2018 5.5 and TR24

innovative techniques

MADE IN GERMANY

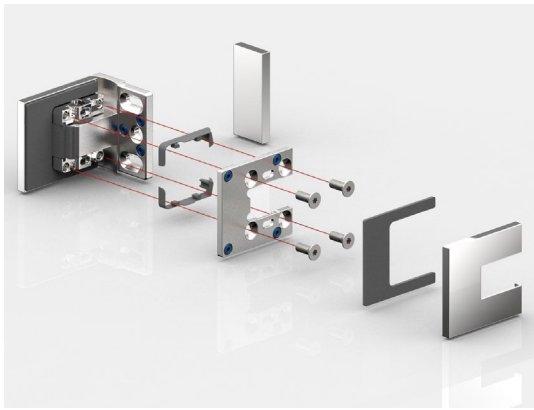

Hinge body and counter plate
Form-fitting interlocking in the fitting body and 4-fold screw connection with TX 25 drive for maximum contact pressure

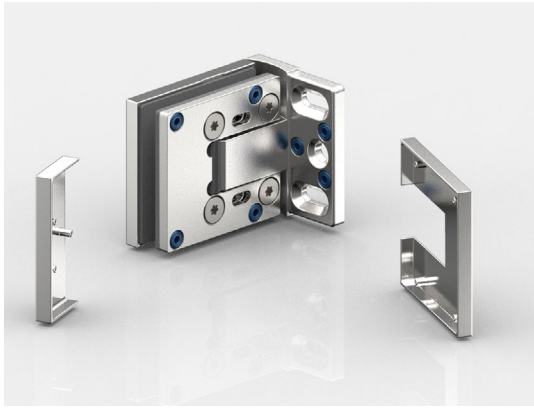

Easy-to-install cover:
To secure the cover caps, they can be quickly and easily inserted into the pre-assembled EPDM moulded parts using the pins and pressed down. To protect the caps against theft, adhesive dots are also available to secure them in place. The caps cover all mounting elements for easy maintenance and cleaning.



new close position technology:
Spreading the axle fixes the zero position in the belt and can be adjusted as often as required.

Please note that the instruction manual at www.pauli.de.

8340ZN-SN glass-wall 90°

MADE IN GERMANY



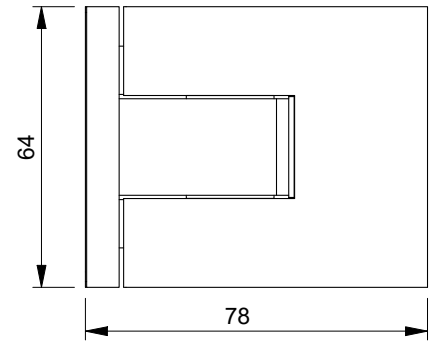

article no.	glass thickness
8340__	8/10* mm



finish	
ZN5	gloss chrome
ZNPVD22	stainless steel optic
ZN135	deep black matt
ZNPVD39	gold bronze brushed
ZNPVD40	gold optic brushed
ZNPVD41	copper optic brushed
ZNPVD42	graphite metal optic brushed

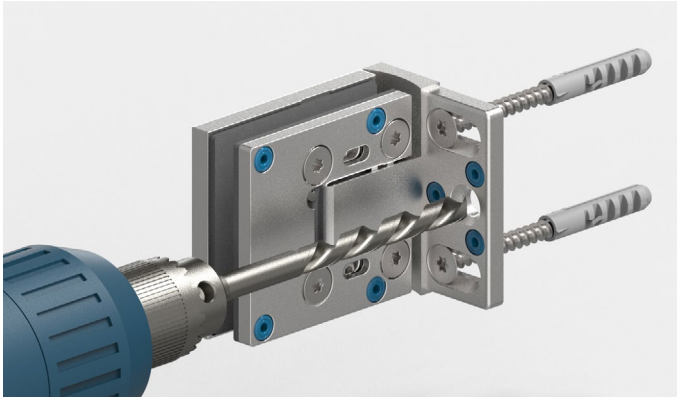

The 3rd fixing hole prevents the fittings from twisting on the wall. The shower hinge is designed in such a way that this hole can be drilled with an 8 mm drill bit while mounted.

features

97° opening in both directions, one-sided mounting bracket, oblong hole, slotted hole adjustment with cover cap, infinitely adjustable closed-position, self-closing on the last centimetres, sealing profile interrupted on the hardware side in the hinge area, Load capacity (2 hinges) 34 kg (max. door panel width 900 mm)

*important

when using the hinges for 10 mm glass, please order the insert-set:
for 10 mm glass insert-set art. no. HZ-SET24
*You can request the glass processing for 10 mm glass from our technical department.

glass reference edge
(inner panel with 8 mm glass)

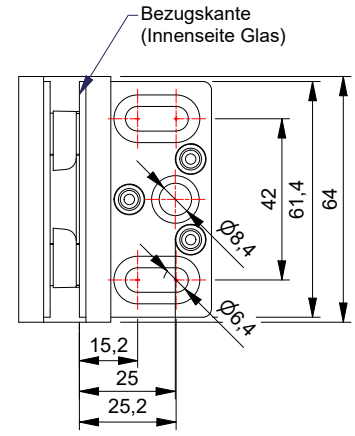

8340ZN-SN glass-wall 90°

MADE IN GERMANY



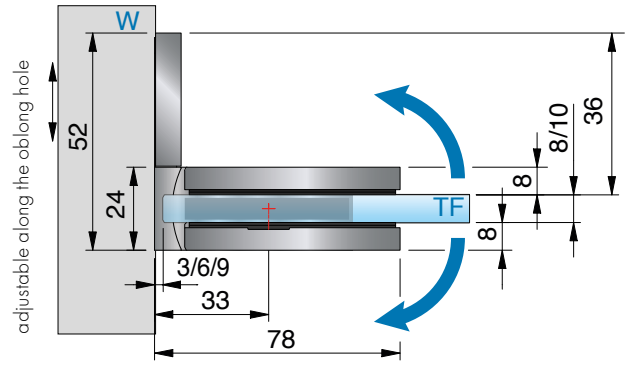

without seal profile, *glass processing for 8 mm

FLAMEApro SAUNA

Glass processing for 3 mm air gap

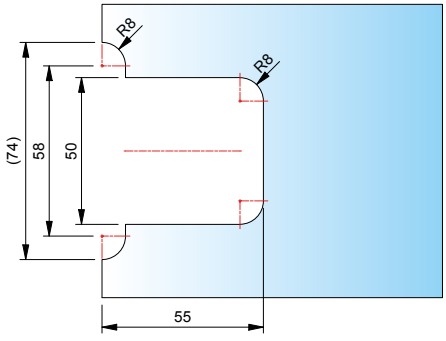

Glass processing for 6 mm air gap

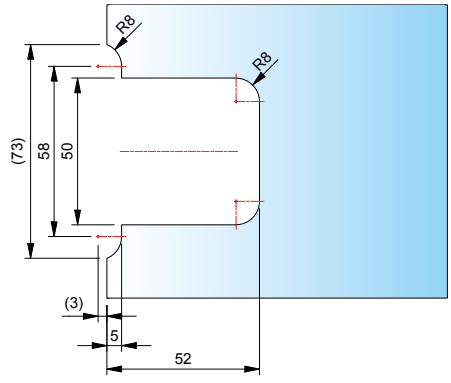

Glass processing for 9 mm air gap

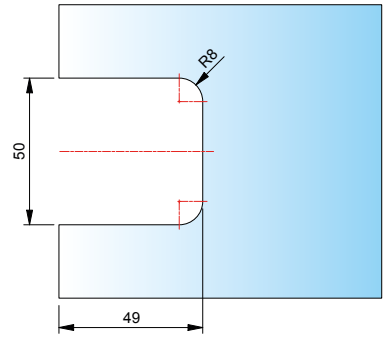

ST = side panel I TF = door panel I W = wall

8346ZN-SN glass-wall 90°

MADE IN GERMANY



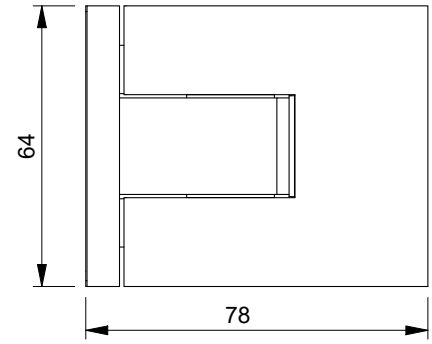

features

97° opening in both directions, one-sided mounting bracket, oblong hole, slotted hole adjustment with cover cap, infinitely adjustable closed-position, self-closing on the last centimetres, sealing profile interrupted on the hardware side in the hinge area, Load capacity (2 hinges) 38 kg (max. door panel width 900 mm)

article no.	glass thickness
8346__	8/10* mm

*important

when using the hinges for 10 mm glass, please order the insert-set:
for 10 mm glass insert-set art. no. HZ-SET24
*You can request the glass processing for 10 mm glass from our technical department.

finish

	ZN5	gloss chrome
	ZNPVD22	stainless steel optic
	ZN135	deep black matt
	ZNPVD39	gold bronze brushed
	ZNPVD40	gold optic brushed
	ZNPVD41	copper optic brushed
	ZNPVD42	graphite metal optic brushed

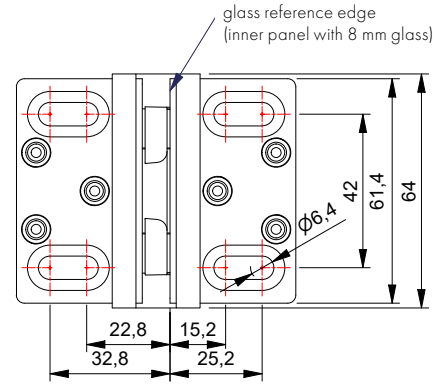

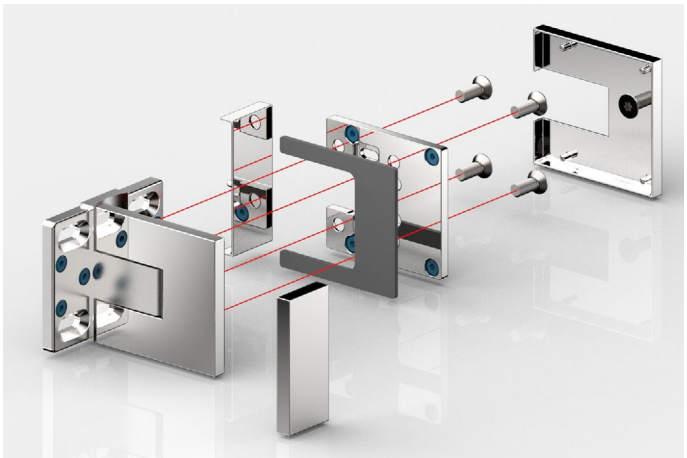

Hinge body and counter plate
Form-fitting interlocking in the fitting body and 4-fold screw connection with TX 25 drive for maximum contact pressure

8346ZN-SN glass-wall 90°

MADE IN GERMANY



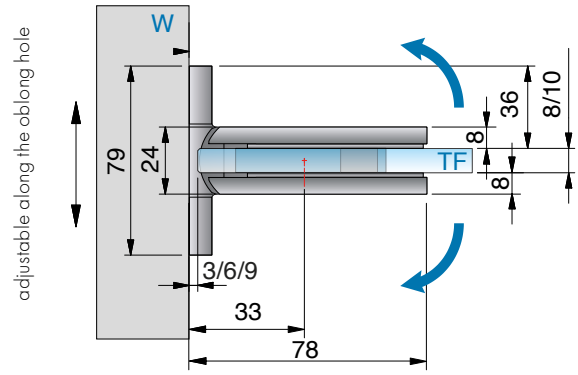

without seal profile, *glass processing for 8 mm

FLAMEApro SAUNA

Glass processing for 3 mm air gap

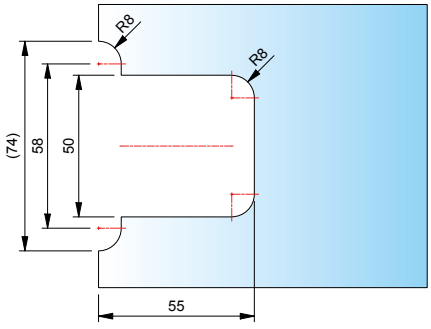

Glass processing for 6 mm air gap

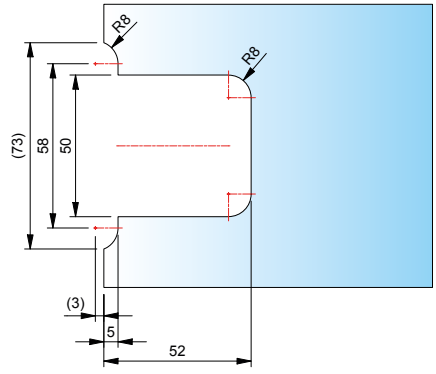

Glass processing for 9 mm air gap

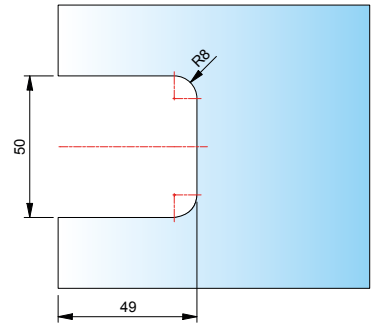

ST = side panel I TF = door panel I W = wall

8342ZN-SN glass-wall 90°

MADE IN GERMANY



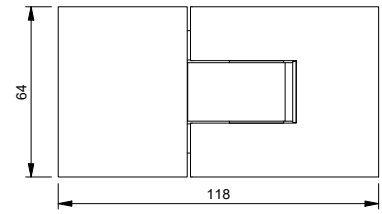

article no.	glass thickness
8330__	8/10* mm

finish		
	ZN5	gloss chrome
	ZNPVD22	stainless steel optic
	ZN135	deep black matt
	ZNPVD39	gold bronze brushed
	ZNPVD40	gold optic brushed
	ZNPVD41	copper optic brushed
	ZNPVD42	graphite metal optic brushed

features
97° opening in both directions, one-sided mounting bracket, oblong hole, slotted hole adjustment with cover cap, infinitely adjustable closed-position, self-closing on the last centimetres, sealing profile interrupted on the hardware side in the hinge area, Load capacity (2 hinges) 32 kg (max. door panel width 900 mm)

*important
when using the hinges for 10 mm glass, please order the insert-set:
for **10 mm glass insert-set art. no. HZ-SET25**
*You can request the glass processing for 6 or 10 mm glass from our technical department.





care instructions
The sauna hinges are to be cleaned only using warm water and a soft nonabrasive cloth for cleaning and drying. Sharp, aggressive, abrasive, alkaline or chlorine containing cleaners may not be used. While cleaning, the door must be held with one hand to prevent over opening.
For heavier stains (lime, grease, soap) we recommend our special cleaning agent
(art. no 8203CTP) on page Seite 671.
The door must be held firmly with one hand during cleaning to prevent over opening.

8342ZN-SN glass-wall 90°

MADE IN GERMANY



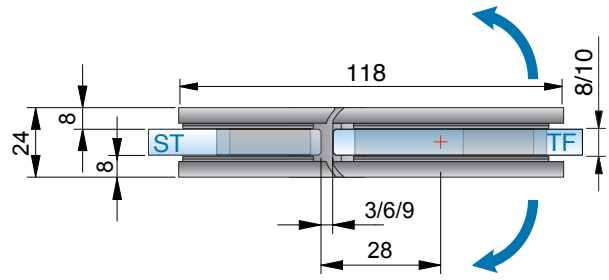

glass processing for 8 mm

Glass processing for 3 mm air gap

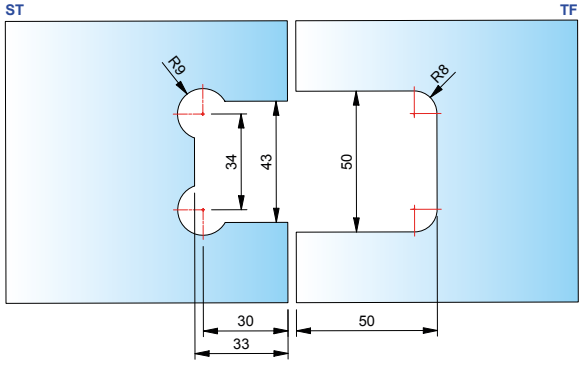

Glass processing for 9 mm air gap

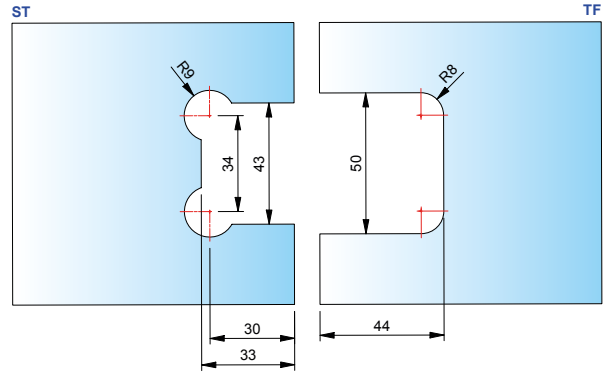

Glass processing for 6 mm air gap

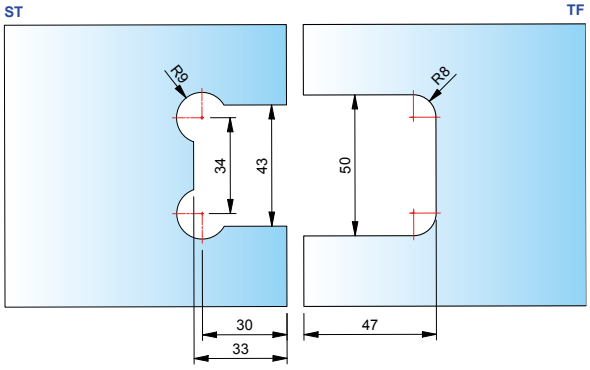

ST = side panel I TF = door panel I W = wall

8344ZN-SN glass-wall 90°

MADE IN GERMANY



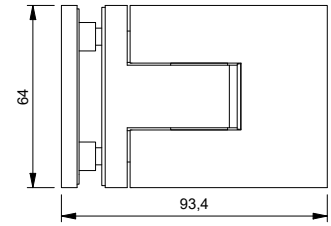

article no.	glass thickness
8344__	8/10* mm



finish		
	ZN5	gloss chrome
	ZNPVD22	stainless steel optic
	ZN135	deep black matt
	ZNPVD39	gold bronze brushed
	ZNPVD40	gold optic brushed
	ZNPVD41	copper optic brushed
	ZNPVD42	graphite metal optic brushed

features
97° opening in both directions, one-sided mounting bracket, oblong hole, slotted hole adjustment with cover cap, infinitely adjustable closed-position, self-closing on the last centimetres, sealing profile interrupted on the hardware side in the hinge area, Load capacity (2 hinges) 34 kg (max. door panel width 900 mm)

*important
when using the hinges for 10 mm glass, please order the insert-set:
for **10 mm glass insert-set art. no. HZ-SET24**
*You can request the glass processing for 10 mm glass from our technical department.

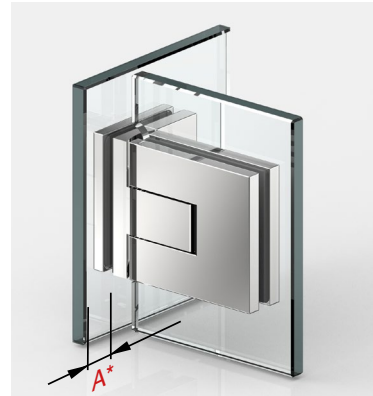

With the 90° glass-to-glass hinge, only glass holes are provided in the side panel, allowing the glass door leaf to be indented inwards and the projection (A) to be determined independently.

8344ZN-SN glass-wall 90°

MADE IN GERMANY



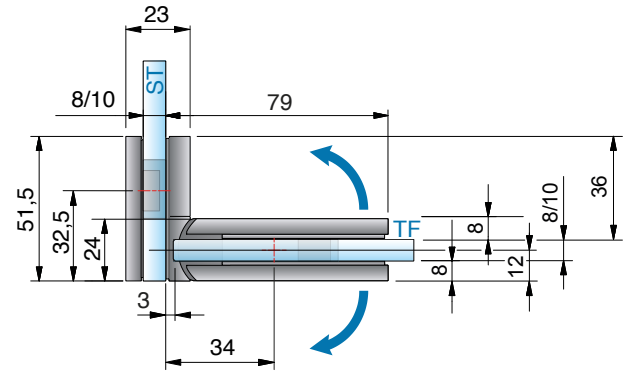

glass processing for 8 mm

Glass processing for 3 mm air gap

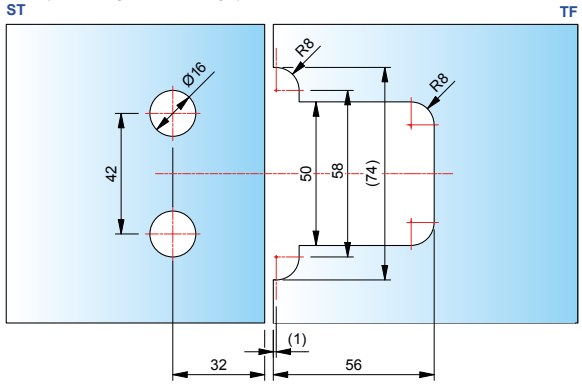

Glass processing for 9 mm air gap

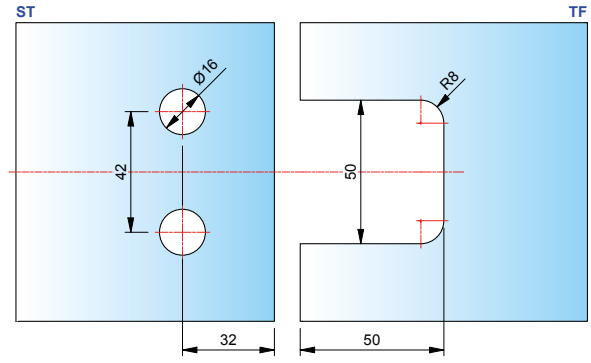

Glass processing for 6 mm air gap

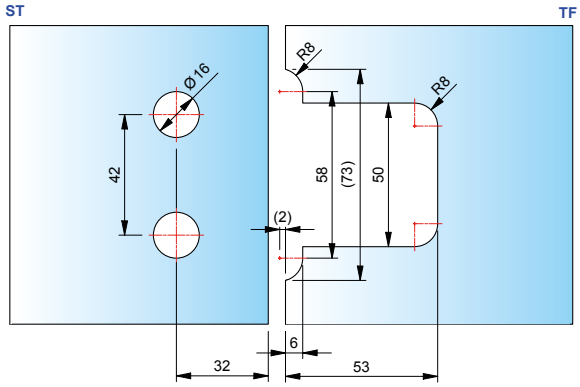

ST = side panel I TF = door panel I W = wall

available **surface colors**



ZN5
gloss chrome



ZN1
matte chrome



ZN10
gloss nickel



ZNPVD22
stainless steel optic



ZNPVD20
gold optic



ZNPVD35
black matt



ZN135
deep black matt

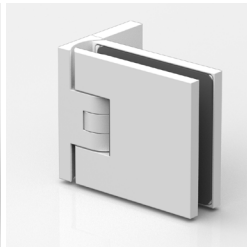

ZN134
white matt

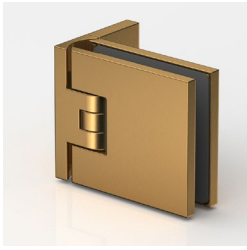

ZNPVD39
gold bronze
brushed

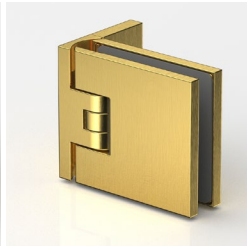

ZNPVD40
gold optic
brushed

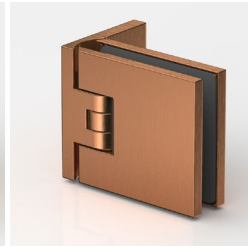

ZNPVD41
copper optic
brushed



ZNPVD42
graphite metall optic
brushed

compatibility chart for fittings manufacturer colors see page 14





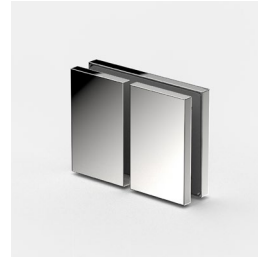

corresponding **angle brackets**

for FLAMEA+ Sauna can be found on page 402.

MADE
IN
GERMANY



FLAMEA+

sauna swing door hinge



FLAMEA+ SAUNA – relentlessly and heat-resistant

MADE IN GERMANY

MADE IN GERMANY

- 90° opening in both directions
- minimized gap distances for the installation in a sauna
- self-closing during the last 15 - 20°
- centered pivot-point, therefore usage as swing door possible
- fully adjustable closed position
- concealed screws

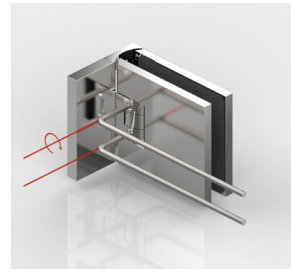

- Infinitely adjustable **closed-position**

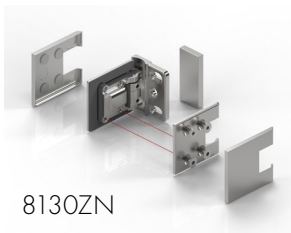

8130ZN

- **Intelligently designed:**
  The hardware body and counter plate fit together with a form-fit con nection andare securely fastened with four screws.

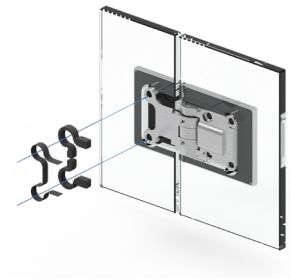

- Filler piece for the glass cutout in the side panel for models 8131ZN-SN and 8132ZN-SN

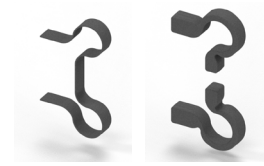



8130ZN-SN
- max. door width 800 mm
- loading capacity (2 hinges): 32 kg (corresponding to a glass door with the dimension 800 x 2000 mm and a glass thickness of 8 mm)



8134ZN-SN
- max. door width 900 mm
- loading capacity (2 hinges): 36 kg (corresponding to a glass door with the dimension 900 x 2000 mm and a glass thickness of 8 mm)



8133ZN-SN
- max. door width 750 mm
- loading capacity (2 hinges): 30 kg (corresponding to a glass door with the dimension 750 x 2000 mm and a glass thickness of 8 mm)



8136ZN-SN
- max. door width 800 mm
- loading capacity (2 hinges): 32 kg (corresponding to a glass door with the dimension 800 x 2000 mm and a glass thickness of 8 mm)



8132ZN-SN
- max. door width 750 mm
- loading capacity (2 hinges): 30 kg (corresponding to a glass door with the dimension 750 x 2000 mm and a glass thickness of 8 mm)



8131ZN-SN
- max. door width 750 mm
- loading capacity (2 hinges): 30 kg (corresponding to a glass door with the dimension 750 x 2000 mm and a glass thickness of 8 mm)

8130ZN-SN glass-wall 90°

MADE IN GERMANY



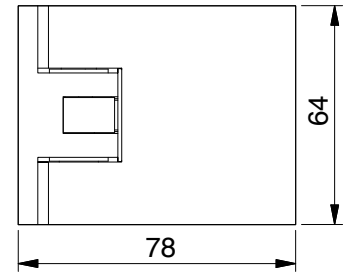

article no.	glass thickness
8130__-SN	8/10* mm



finish	
ZN5	gloss chrome
ZN1	matt chrome
ZN10	gloss nickel
ZNPVD22	stainless steel optic
ZNPVD20	gold optic
ZNPVD35	black matt
ZN134	white matt
ZN135	deep black matt
ZNPVD39	gold bronze brushed
ZNPVD40	gold optic brushed
ZNPVD41	copper optic brushed
ZNPVD42	graphite metal optic brushed

features

opens in- and outwards 90°, with adjustable closed position, adjustable anlong the oblong hole, one sided mounting plate, concealed screws

max. door width 800 mm load capacity (2 hinges):
32 kg with max. 800 x 2000 x 8 mm

*Important

When using the hinges for 10 mm glass thickness, please use the insert set Art. No. HX-SET3 per hinge free of charge.

glass processing for 8/10 mm glass

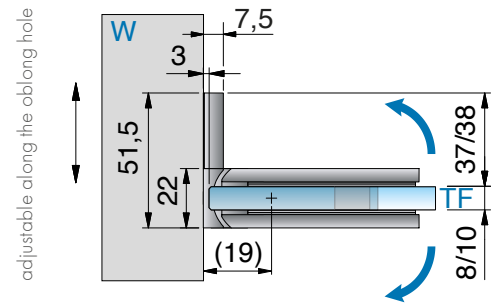

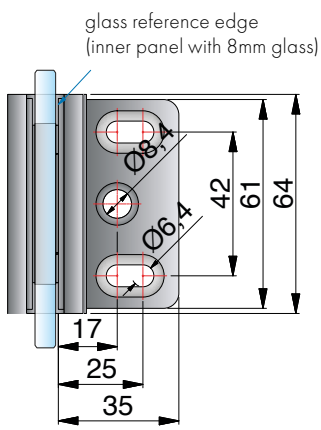

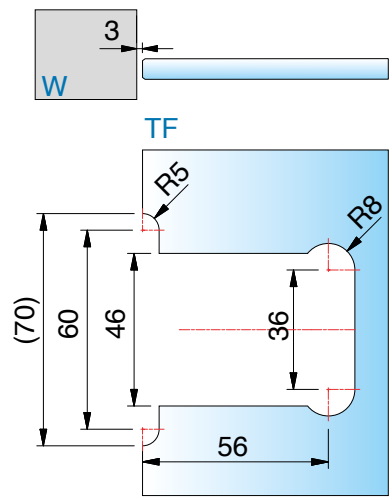

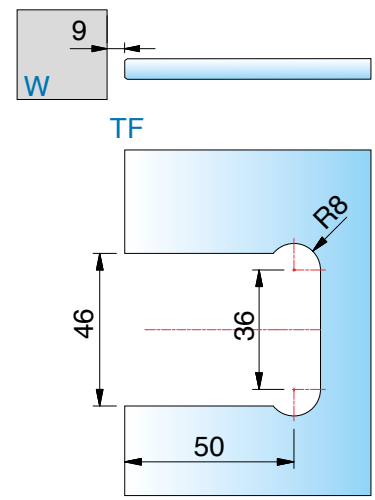

ST = side panel I TF = door panel I W = wall

8134ZN-SN glass-wall 90°

MADE IN GERMANY



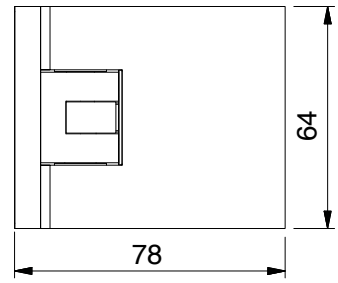

article no.	glass thickness
8134__-SN	8/10* mm



finish		
	ZN5	gloss chrome
	ZN1	matt chrome
	ZN10	gloss nickel
	ZNPVD22	stainless steel optic
	ZNPVD20	gold optic
	ZNPVD35	black matt
	ZN134	white matt
	ZN135	deep black matt
	ZNPVD39	gold bronze brushed
	ZNPVD40	gold optic brushed
	ZNPVD41	copper optic brushed
	ZNPVD42	graphite metal optic brushed

features

opens in- and outwards 90°, with adjustable closed position, adjustable anlong the oblong hole, one sided mounting plate, concealed screws

max. door width 900 mm load capacity (2 hinges):
36 kg with max. 900 x 2000 x 8 mm

*Important

When using the hinges for 10 mm glass thickness, please use the insert set Art. No. HX-SET3 per hinge free of charge.

glass processing for 8/10 mm glass

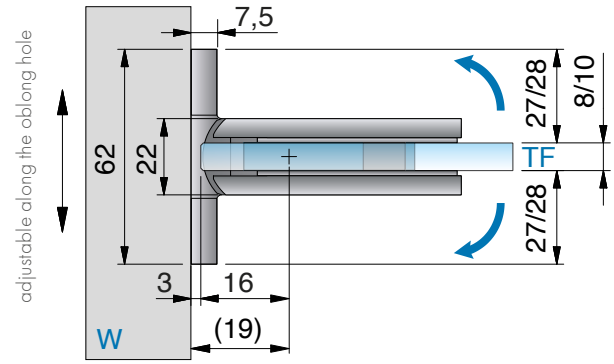

glass reference edge
(inner panel with 8mm glass)

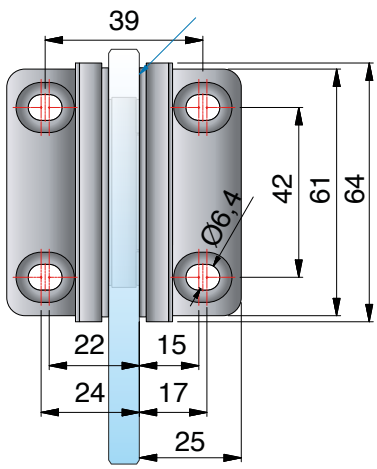

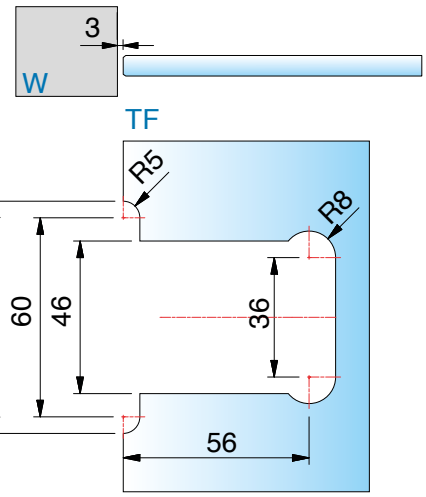

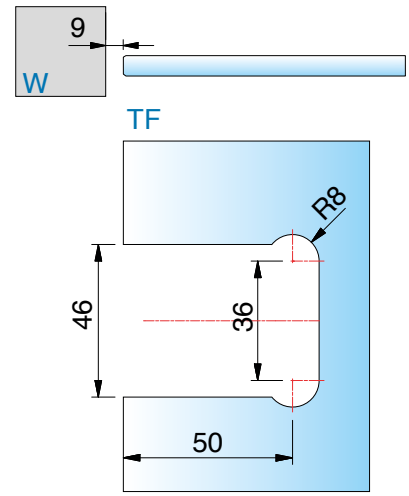

ST = side panel I TF = door panel I W = wall

FLAMEA+ SAUNA

8133ZN-SN glass-wall 180°

MADE IN GERMANY



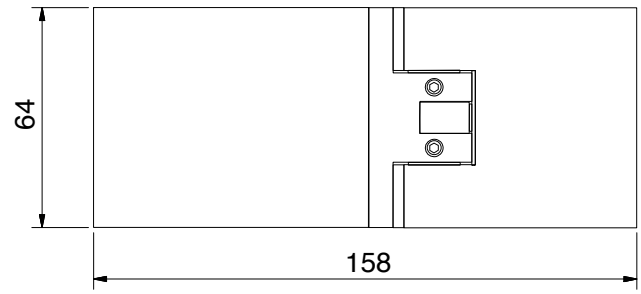

article no.	glass thickness
8133___-SN	8/10* mm



finish		
	ZN5	gloss chrome
	ZN1	matt chrome
	ZN10	gloss nickel
	ZNPVD22	stainless steel optic
	ZNPVD20	gold optic
	ZNPVD35	black matt
	ZN134	white matt
	ZN135	deep black matt
	ZNPVD39	gold bronze brushed
	ZNPVD40	gold optic brushed
	ZNPVD41	copper optic brushed
	ZNPVD42	graphite metal optic brushed

features
opens in- and outwards 90°, with adjustable closed position, adjustable anlong the oblong hole, one sided mounting plate, concealed screws
max. door width 750 mm load capacity (2 hinges):
30 kg with max. 750 x 2000 x 8 mm

*Important
When using the hinges for 10 mm glass thickness, please use the insert set Art. No. HX-SET3 per hinge free of charge.
without seal profile, *glass processing for 8/10 mm

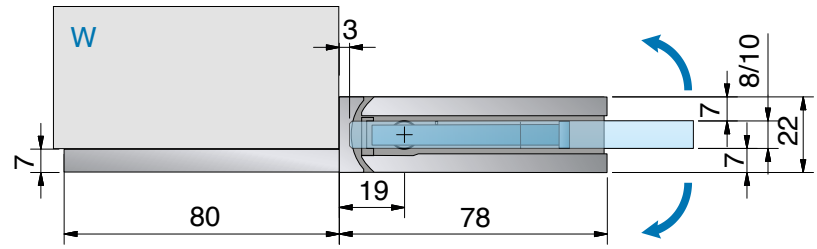

adjustable along the oblong hole

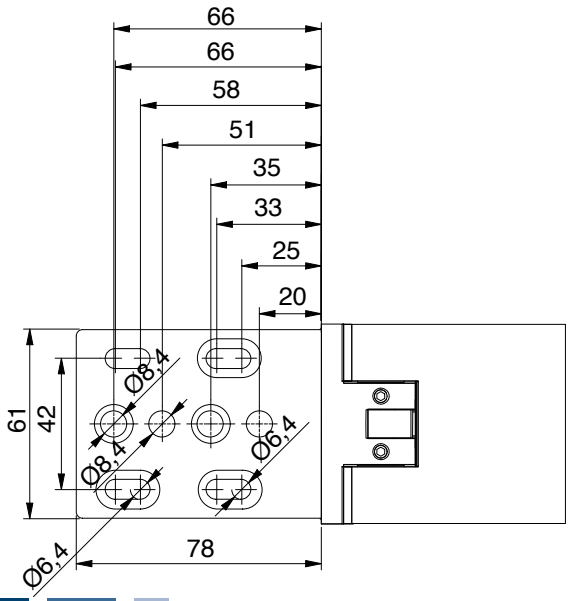





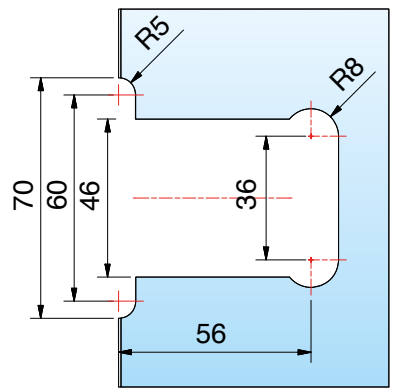

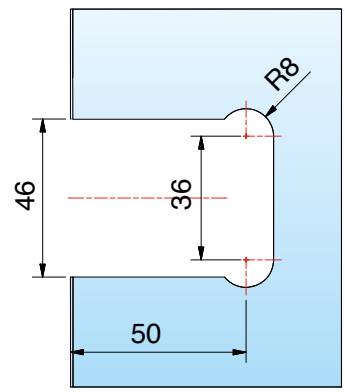

8136ZN-SN glass-glass 90°

MADE IN GERMANY



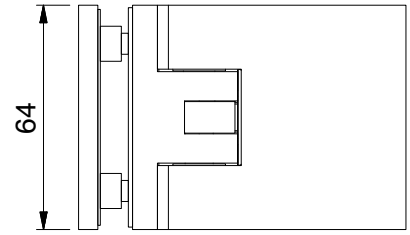

features
opens in- and outwards 90°, with adjustable closed position, adjustable anlong the oblong hole, one sided mounting plate, concealed screws
max. door width 800 mm load capacity (2 hinges):
32 kg with max. 800 x 2000 x 8 mm

*Important
When using the hinges for 10 mm glass thickness, please use the insert set Art. No. HX-SET4 per hinge free of charge.
without seal profile, *glass processing for 8 mm

article no.		glass thickness
8136__-SN		8/10* mm
finish		
	ZN5	gloss chrome
	ZN1	matt chrome
	ZN10	gloss nickel
	ZNPVD22	stainless steel optic
	ZNPVD20	gold optic
	ZNPVD35	black matt
	ZN134	white matt
	ZN135	deep black matt
	ZNPVD39	gold bronze brushed
	ZNPVD40	gold optic brushed
	ZNPVD41	copper optic brushed
	ZNPVD42	graphite metal optic brushed

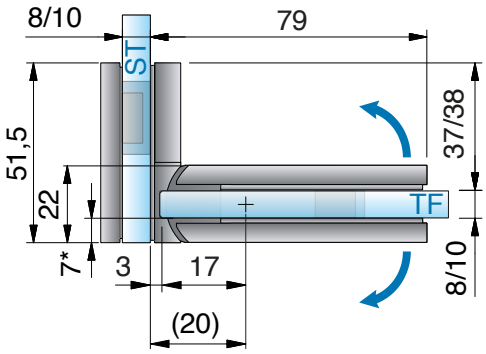

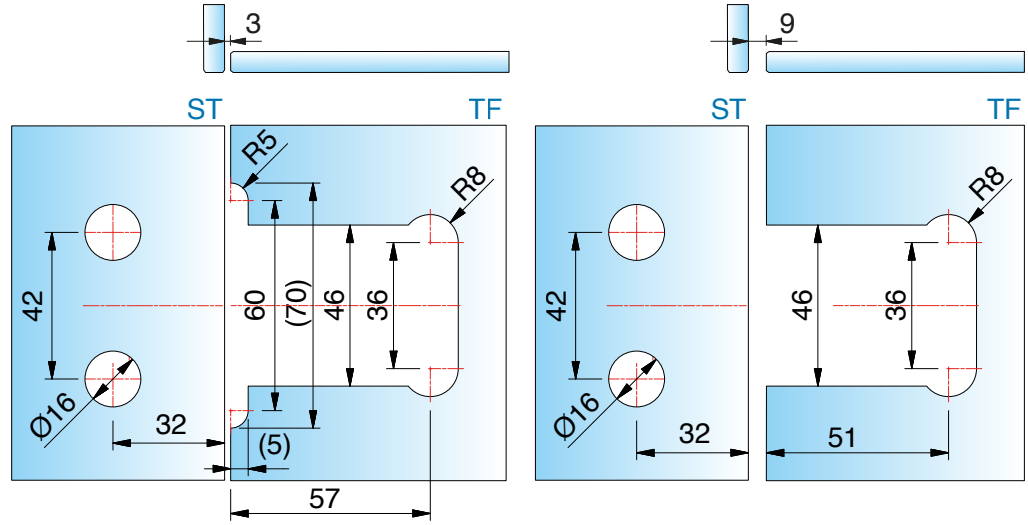

ST = side panel I TF = door panel I W = wall

8132ZN-SN glass-wall 180°

MADE IN GERMANY



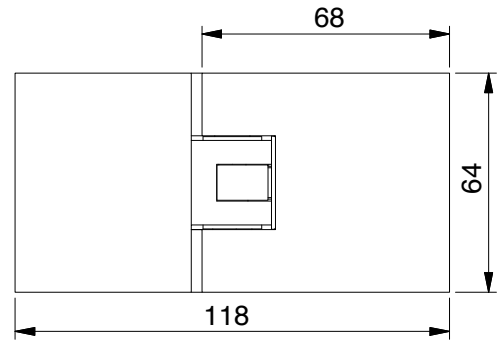

article no.	glass thickness
8132__-SN	8/10* mm



finish		
	ZN5	gloss chrome
	ZN1	matt chrome
	ZN10	gloss nickel
	ZNPVD22	stainless steel optic
	ZNPVD20	gold optic
	ZNPVD35	black matt
	ZN134	white matt
	ZN135	deep black matt
	ZNPVD39	gold bronze brushed
	ZNPVD40	gold optic brushed
	ZNPVD41	copper optic brushed
	ZNPVD42	graphite metal optic brushed

features

opens in- and outwards 90°, with adjustable closed position, adjustable along the oblong hole, concealed screws the insert (8132-10KU-SN) which prevents the door panel from sliding-down is included free of charge.

max. door width 750 mm load capacity (2 hinges):
30 kg with max. 750 x 2000 x 8 mm

*Important

When using the hinges for 10 mm glass thickness, please use the insert set Art. No. HX-SET4 per hinge free of charge.

without seal profile, *glass processing for 8 mm

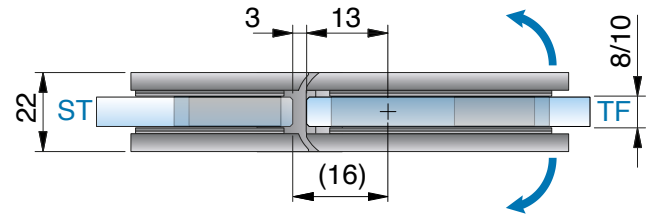

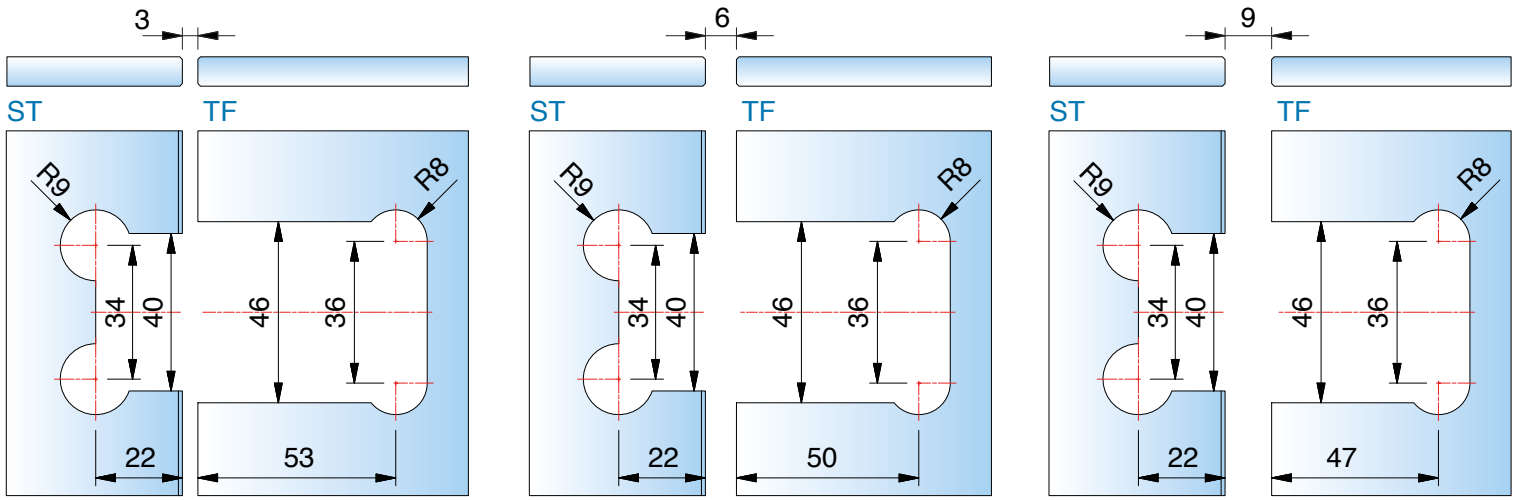

ST = side panel I TF = door panel I W = wall

8131ZN-SN glass-glass 135°

MADE IN GERMANY



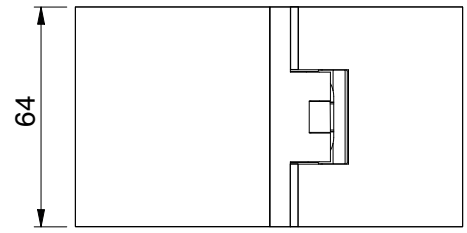

features

opens in- and outwards 90°, with adjustable closed position, adjustable anlong the oblong hole, one sided mounting plate, concealed screws

max. door width 750 mm load capacity (2 hinges):
30 kg with max. 750 x 2000 x 8 mm

*Important

When using the hinges for 10 mm glass thickness, please use the insert set Art. No. HX-SET4 per hinge free of charge.

without seal profile, *glass processing for 8 mm

article no.	glass thickness
8131__-SN	8/10* mm

finish	
ZN5	gloss chrome
ZN1	matt chrome
ZN10	gloss nickel
ZNPVD22	stainless steel optic
ZNPVD20	gold optic
ZNPVD35	black matt
ZN134	white matt
ZN135	deep black matt
ZNPVD39	gold bronze brushed
ZNPVD40	gold optic brushed
ZNPVD41	copper optic brushed
ZNPVD42	graphite metal optic brushed

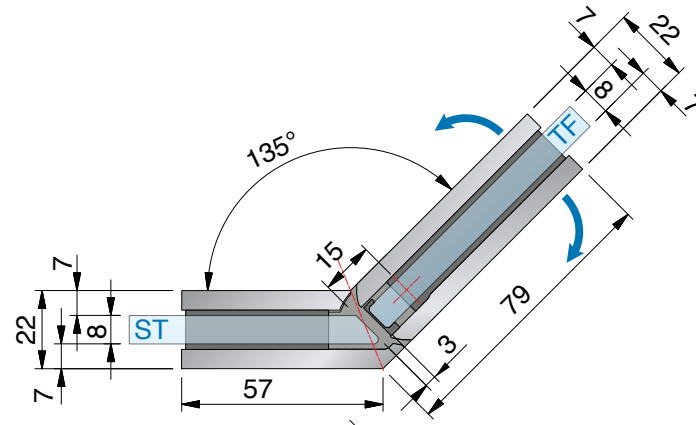

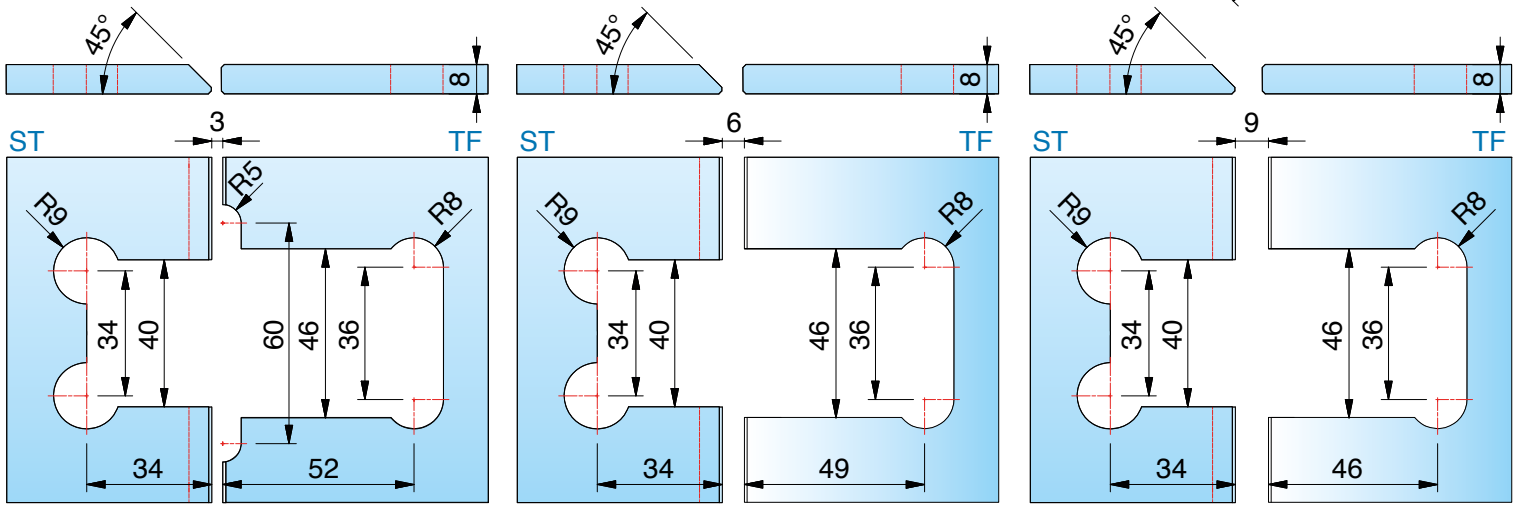

ST = side panel I TF = door panel I W = wall

8194ZN-SN glass-wall 90° - fixed

MADE IN GERMANY



article no.	glass thickness
8194__-SN	8/10 mm

finish	
ZN5	gloss chrome
ZN1	matt chrome
ZN10	gloss nickel
ZNPVD22	stainless steel optic
ZNPVD20	gold optic
ZNPVD35	black matt
ZN135	deep black matt
ZN134	white matt
ZNPVD39	gold bronze brushed
ZNPVD40	gold optic brushed
ZNPVD41	copper optic brushed
ZNPVD42	graphite metal optic brushed

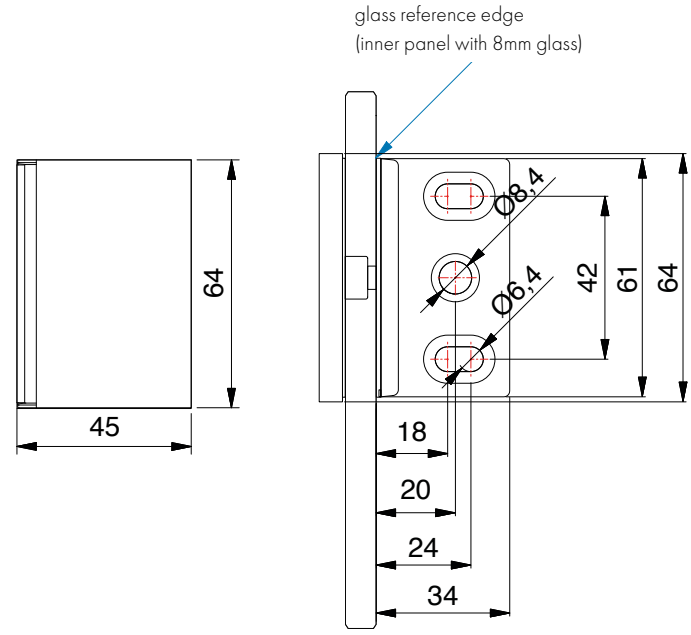

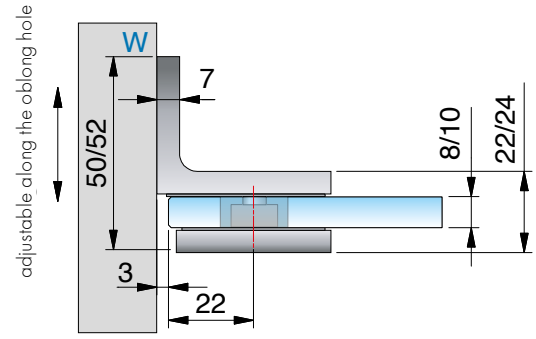

features
with adjustable closed position, concealed screws with cover plate

glass processing for 6/8/10 mm
hole ø 20 mm or edge recess R35

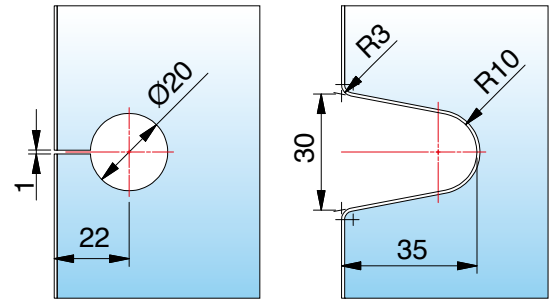

ST = side panel I TF = door panel I W = wall

8196ZN-SN glass-glass 90° - fixed

MADE IN GERMANY



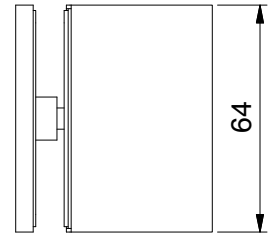

article no. FLAMEA+		glass thickness
8196__-SN		8/10 mm
finish		
	ZN5	gloss chrome
	ZN1	matt chrome
	ZN10	gloss nickel
	ZNPVD22	stainless steel optic
	ZNPVD20	gold optic
	ZNPVD35	black matt
	ZN135	deep black matt
	ZN134	white matt
	ZNPVD39	gold bronze brushed
	ZNPVD40	gold optic brushed
	ZNPVD41	copper optic brushed
	ZNPVD42	graphite metal optic brushed

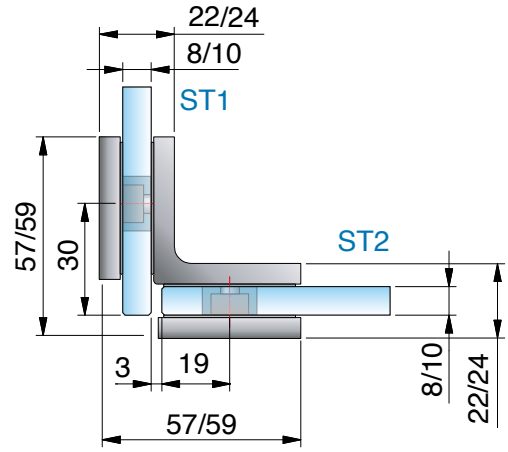

features
concealed screws with cover plate

*You can request the glass processing for 10 mm glass from our technical department.

glass processing for 8 mm

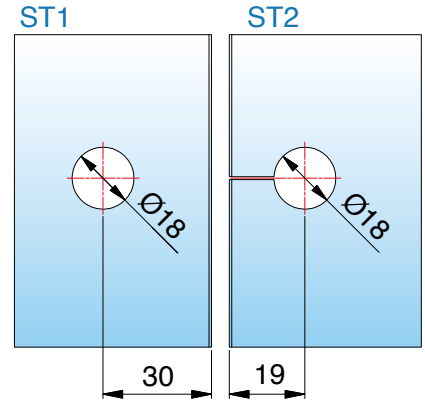

ST = side panel I TF = door panel I W = wall

8191ZN-SN glass-glass 180°

MADE IN GERMANY



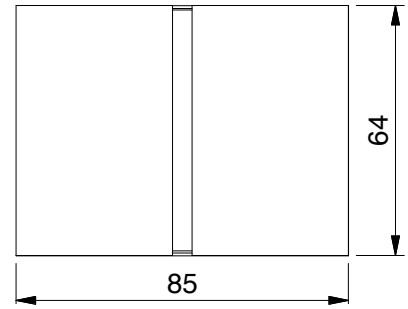

article no.	glass thickness
8191__	8/10 mm



features
concealed screws with cover plate

finish		
	ZN5	gloss chrome
	ZN1	matt chrome
	ZNPVD22	stainless steel optic
	ZNPVD35	black matt
	ZNPVD39	gold bronze brushed
	ZNPVD40	gold optic brushed
	ZNPVD41	copper optic brushed
	ZNPVD42	graphite metal optic brushed

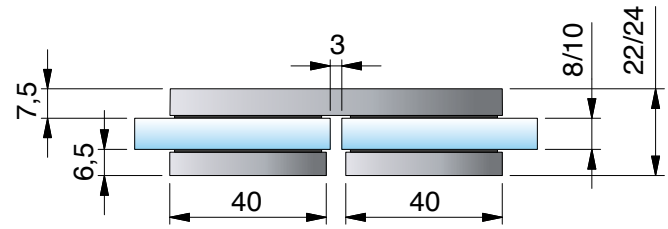

*glass processing for 8 mm

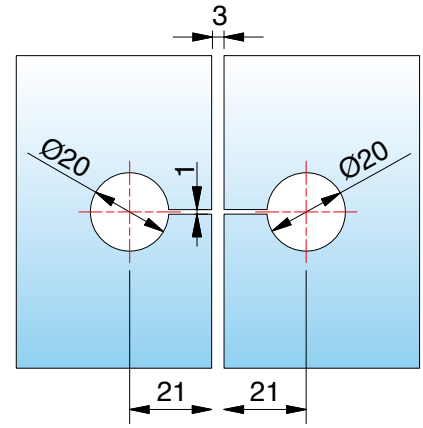

ST = side panel I TF = door panel I W = wall

Zubehör

MADE IN GERMANY



article no.	article description
8132-10KU-SN 8132-3EPDM	filler piece for glass cutout of the side panel mounting for 8131ZN-SN and 8132ZN-SN (2 pieces per hinge included).

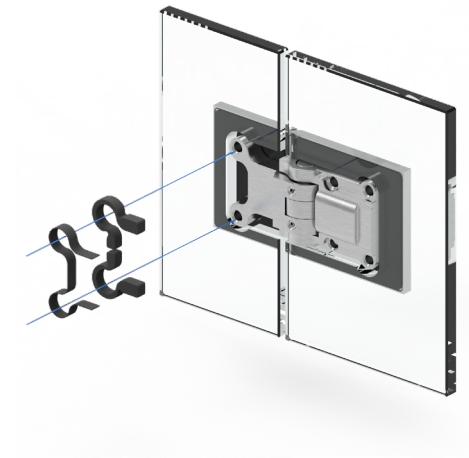



article no.	article description
8878FKM-1	insert for glass recess, 300x8x1 mm
8878FKM-2	insert for glass recess, 300x8x2 mm

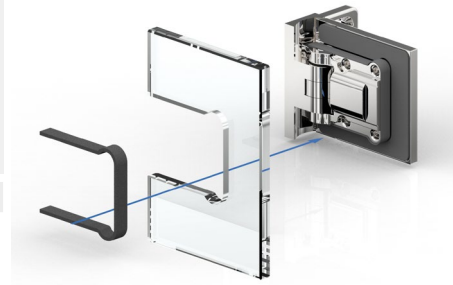

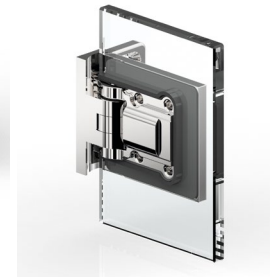





care instructions

The sauna hinges are to be cleaned only using warm water and a soft nonabrasive cloth for cleaning and drying. Sharp, aggressive, abrasive, alkaline or chlorine containing cleaners may not be used. While cleaning, the door must be held with one hand to prevent over opening.
For heavier stains (lime, grease, soap) we recommend our special cleaning agent **(art. no 8203CTP)** on page Seite 671.
The door must be held firmly with one hand during cleaning to prevent over opening.

available **surface colors**



ZN5
gloss chrome



ZN1
matt chrome



ZNPVD22
stainless steel optic



ZN135
deep black matt

compatibility chart for fittings manufacturer colors see page 14





corresponding **angle brackets**

for TURA Sauna can be found on page 420.

MADE
IN
GERMANY



TURA

sauna heavy-duty striker door hinge



TURA Sauna - versatile solutions for large all-glass installations

MADE IN GERMANY



- glass thickness: 8/10/12 mm
- suitable angle brackets
- max. temperature at the upper hinge 80°C (corresponded to a value setting of a sauna temperature setting of 100°C)
- closed position **not** adjustable
- door fixing „**on-site**" with e.g. roller catches
- installation only with **door-stop**
- three drillings in the glass allow a higher load capacity
- or wall mounting we offer extra long DIN9135 screws - see page 393.

- For the best possible protection and sealing, we recommend to install all TURA sauna hinges with the seal profile 8848-KU0-8(10)-2500.

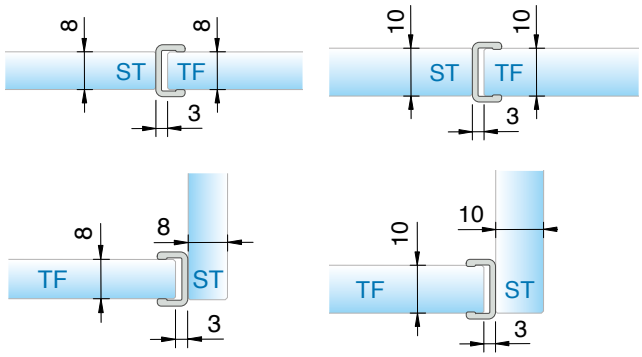

The sauna series TURA-SN offers you a hardware program with very high load-bearing capacity. This allows the all-glass doors to shine with with larger dimensions and more weight.

- Load capacity (2 hinges): 50kg
  corresponds to a glass door panel of 1000 x 2000 mm
  with a glass thickness of 10 mm
  max.door panel width: 1000 mm
  max. door panel height: 2700 mm



8961ZN-SN
glass-wall 90°



8962ZN-SN
glass-wall 90°



8960ZN-SN
glass-glass 90°/180°

8962ZN-SN glass-wall 90° - wall mounting inside

MADE IN GERMANY



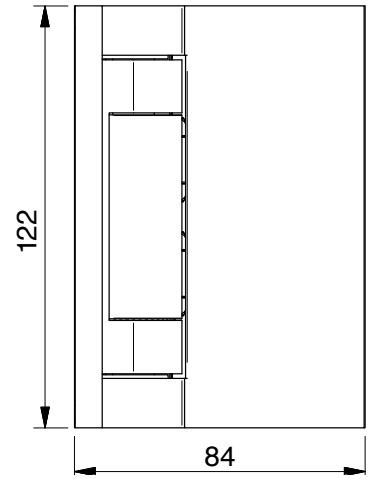

article no.	glass thickness
8962__-SN	8/10/12 mm



finish	
ZN5	gloss chrome
ZN1	matt chrome
ZNPVD22	stainless steel optic
ZNPVD35	black matt

We recommend seal 8848-KU0-8(10)-2500
with at least 3 mm spacing

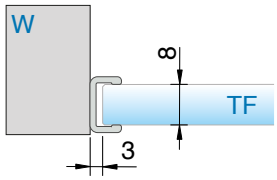

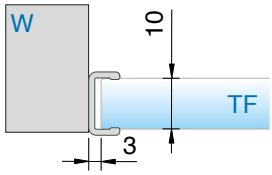

features
one-sided opening outwards minimum 90°, concealed screws, wall mounting inside with oblong hole
*You can request the glass processing for 12 mm glass from our technical department.

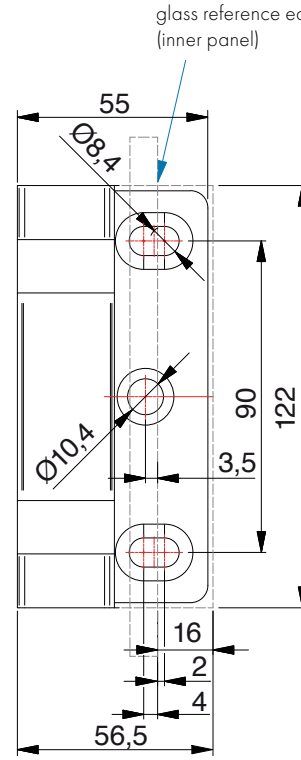

8962ZN-SN glass-wall 90° - wall mounting inside

MADE IN GERMANY

for 8/10 mm glass

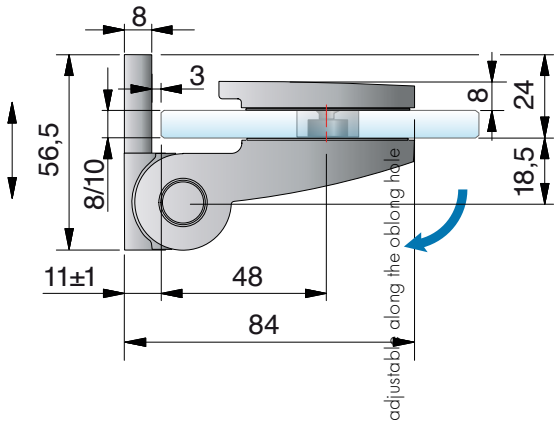

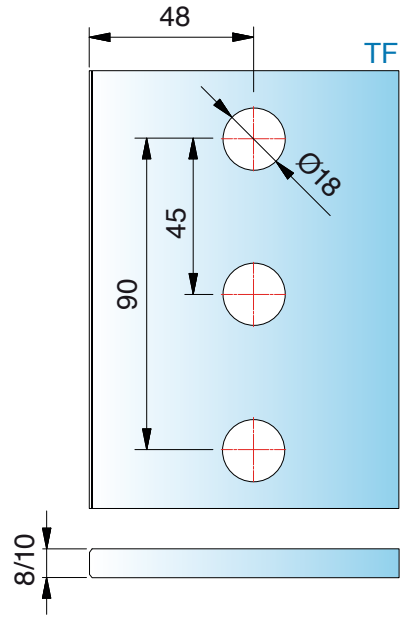

We recommend seal 8848-KU0-8(10)-2500 with at least 3 mm spacing

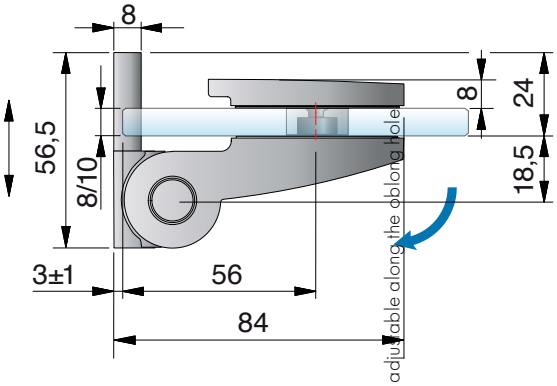

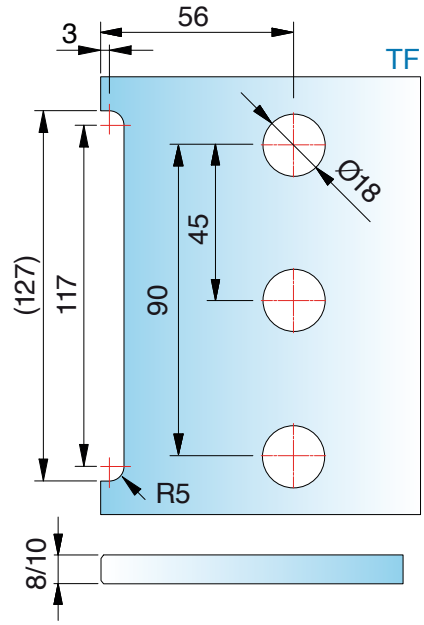

ST = side panel I TF = door panel I W = wall

8961ZN-SN glass-wall 90° - wall mounting inside

MADE IN GERMANY



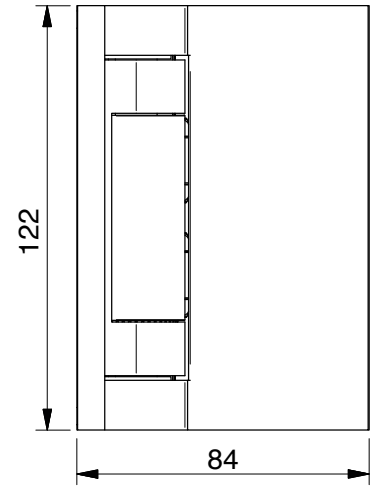

article no.	glass thickness
8961__-SN	8/10/12 mm

finish

ZN5	gloss chrome
ZN1	matt chrome
ZNPVD22	stainless steel optic
ZNPVD35	black matt

We recommend seal 8848-KU0-8(10)-2500
with at least 3 mm spacing

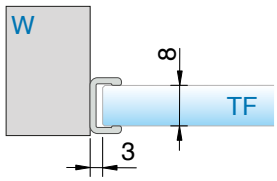

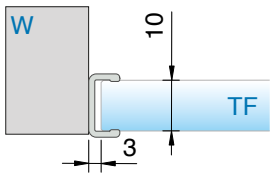

features
one-sided opening outwards minimum 90°, concealed screws, wall mounting inside with oblong hole
*You can request the glass processing for 12 mm glass from our technical department.

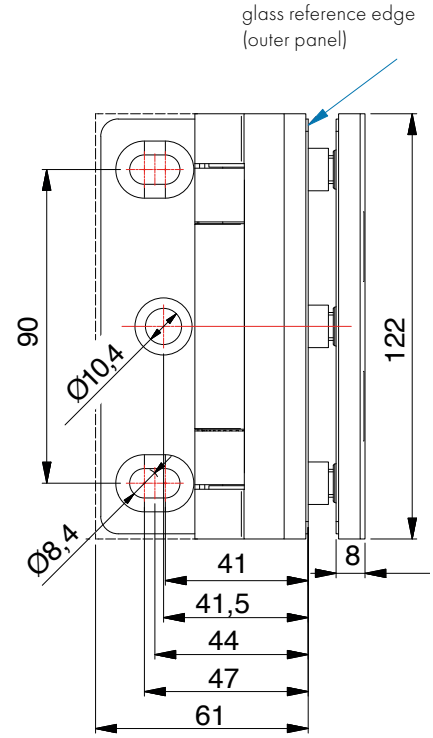

8961ZN-SN glass-wall 90° - wall mounting inside

MADE IN GERMANY

for 8/10 mm glass

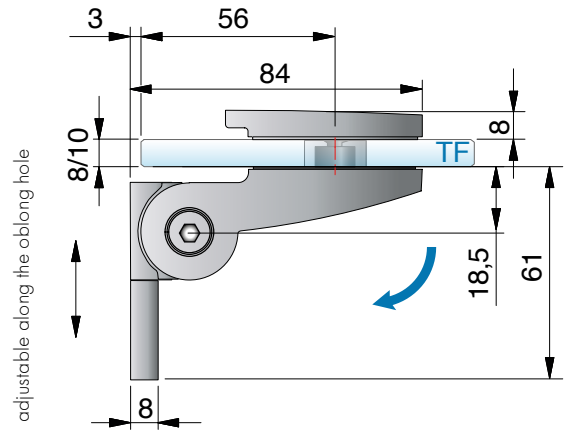

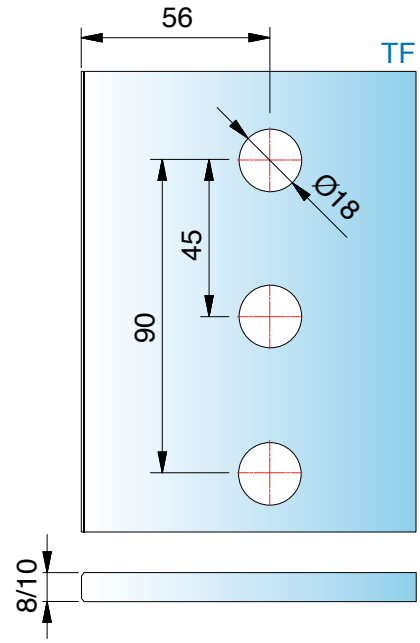

We recommend seal 8848-KU0-8(10)-2500 with at least 3 mm spacing





care instructions

The sauna hinges are to be cleaned only using warm water and a soft nonabrasive cloth for cleaning and drying. Sharp, aggressive, abrasive, alkaline or chlorine containing cleaners may not be used. While cleaning, the door must be held with one hand to prevent over opening.
For heavier stains (lime, grease, soap) we recommend our special cleaning agent (art. no 8203CTP) on page Seite 671.
The door must be held firmly with one hand during cleaning to prevent over opening.

TURA SAUNA

ST = side panel I TF = door panel I W = wall

8961ZN-SN glass-wall 90° - wall mounting inside

MADE IN GERMANY



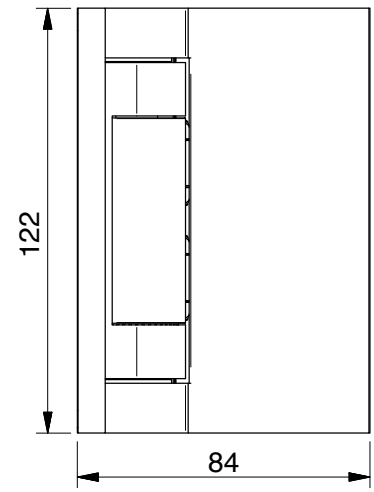

article no.	glass thickness
8961__-SN	8/10/12 mm

finish

	ZN5	gloss chrome
	ZN1	matt chrome
	ZNPVD22	stainless steel optic
	ZNPVD35	black matt

We recommend seal 8848-KU0-8(10)-2500
with at least 3 mm spacing

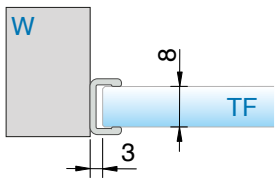

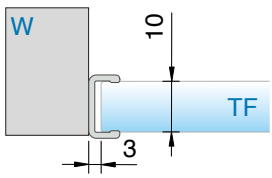

features
one-sided opening inwards minimum 90°, concealed screws, wall mounting inside with oblong hole
*You can request the glass processing for 12 mm glass from our technical department.

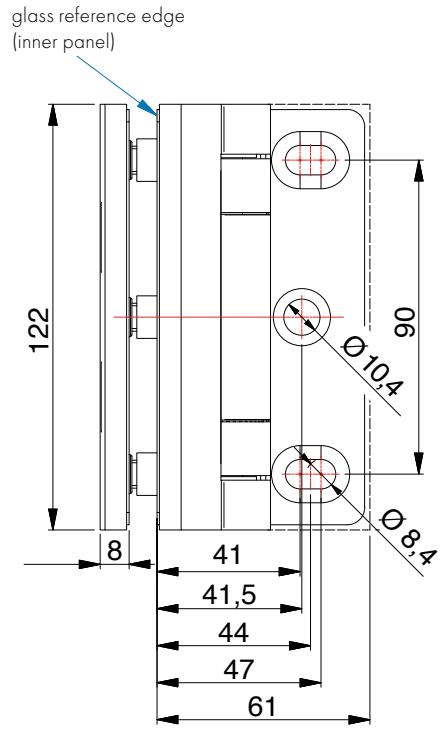

8961ZN-SN glass-wall 90° - wall mounting inside

MADE IN GERMANY

tfor 8/10mm glass

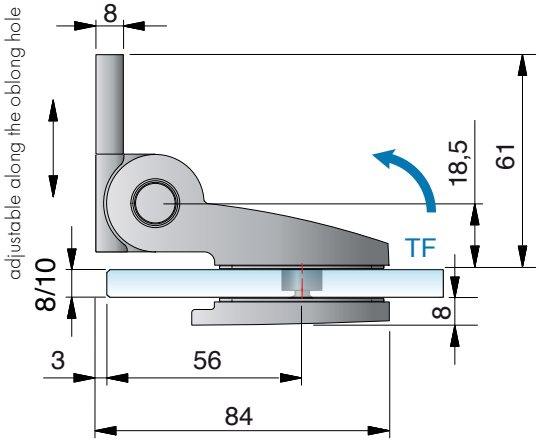

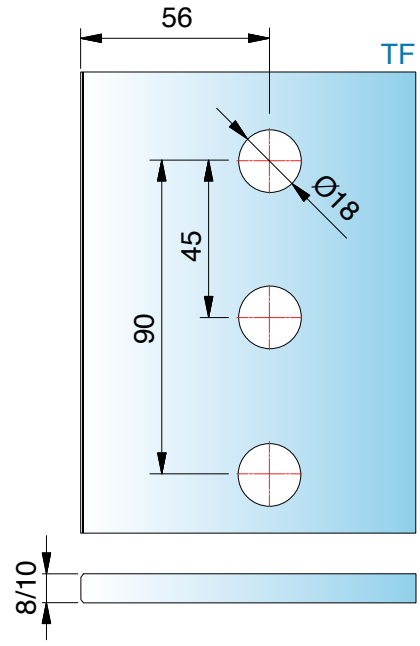

We recommend seal 8848-KU0-8(10)-2500
with at least 3 mm spacing

accessories - screws

MADE IN GERMANY

chipboard screw DIN9135



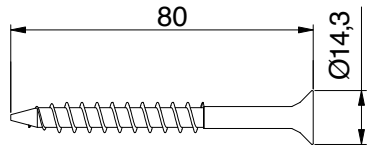

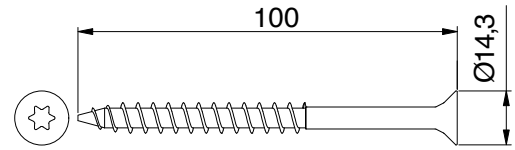

article no.	features
Z100VA	countersink head, TX40 drive 8x80 A2

article no.	features
Z101VA	countersink head, TX40 drive 8x100 A2

ST = side panel I TF = door panel I W = wall

8960ZN-SN glass-glass 90°

MADE IN GERMANY



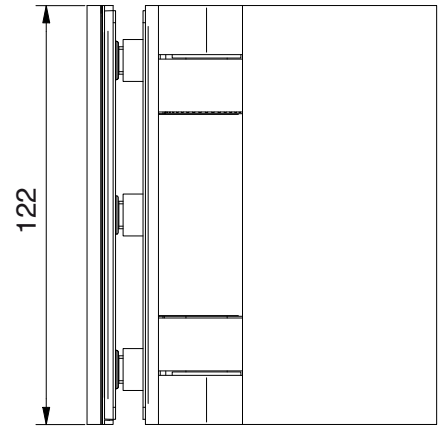

article no.	glass thickness
8960__-SN	8/10/12 mm



finish	
ZN5	gloss chrome
ZN1	matt chrome
ZNPVD22	stainless steel optic
ZNPVD35	black matt

features
one-sided opening inwards minimum 90°, concealed screws
*You can request the glass processing for 12 mm glass from our technical department.

We recommend seal 8848-KU0-8(10)-2500
with at least 3 mm spacing

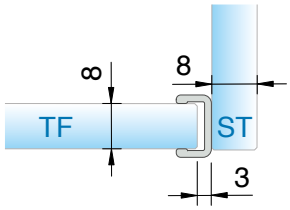

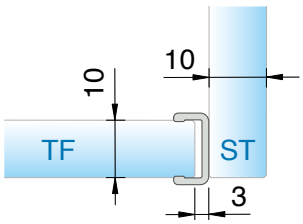

8960ZN-SN glass-glass 90°

MADE IN GERMANY

for glass 8 mm

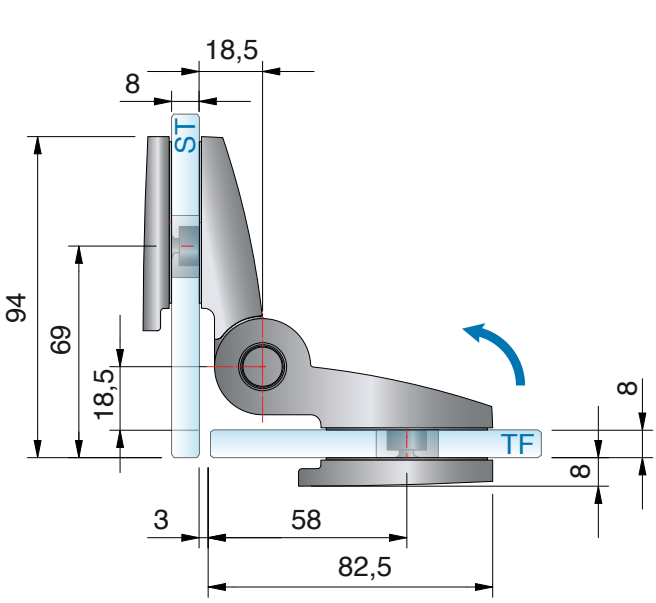

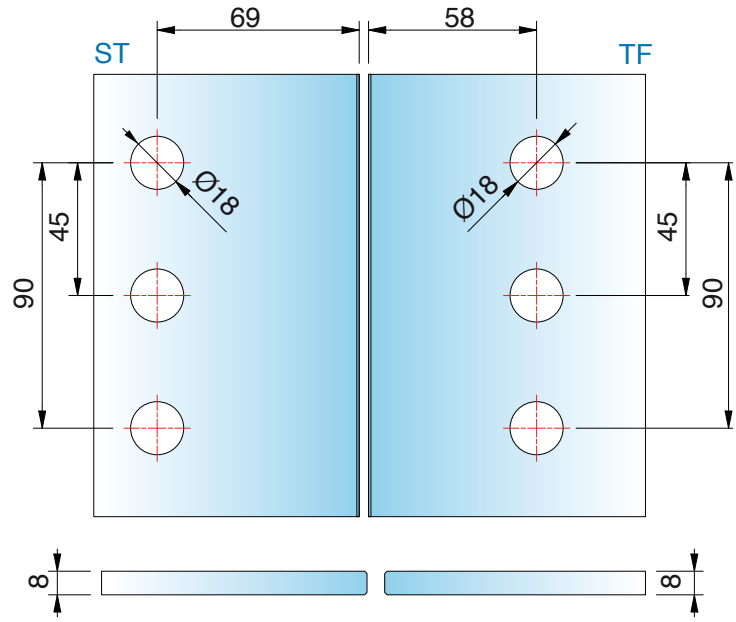

for glass 10 mm

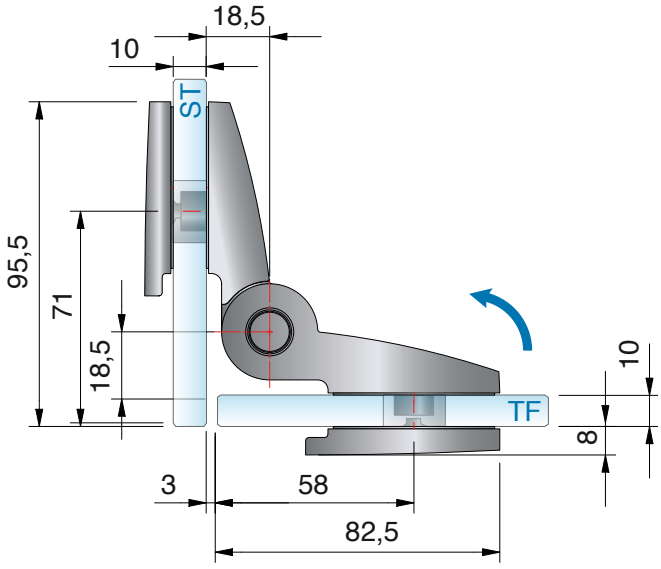

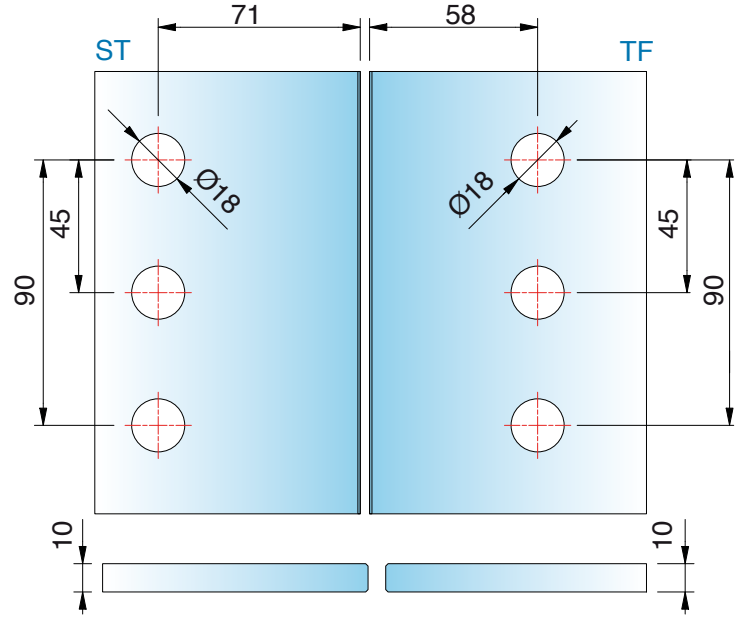

ST = side panel I TF = door panel I W = wall

8960ZN-SN glass-glass 90°

MADE IN GERMANY



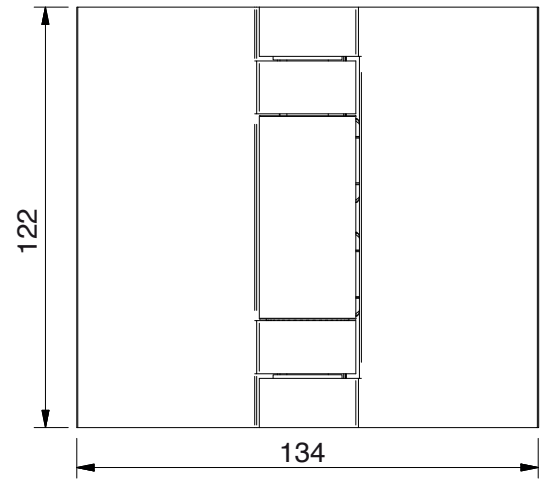

article no.	glass thickness
8960__-SN	8/10/12 mm



finish	
ZN5	gloss chrome
ZN1	matt chrome
ZNPVD22	stainless steel optic
ZNPVD35	black matt

features
one-sided opening inwards or outwards minimum 180°, concealed screws
*You can request the glass processing for 12 mm glass from our technical department.

We recommend seal 8848-KU0-8(10)-2500
with at least 3 mm spacing

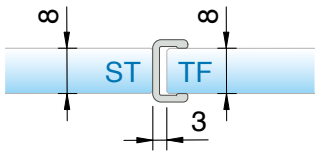

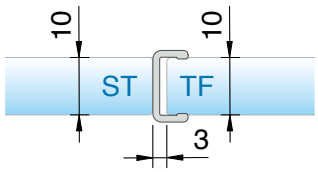

8960ZN-SN glass-glass 90°

MADE IN GERMANY

for glass 8/10 mm

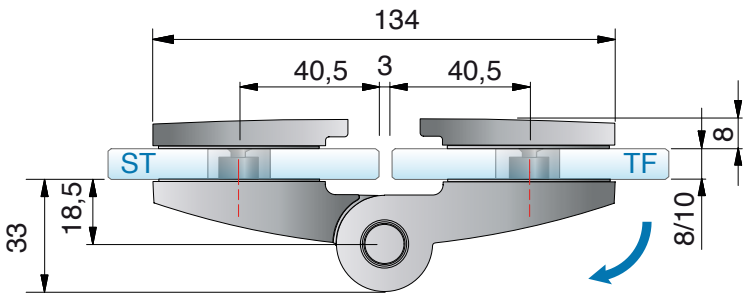

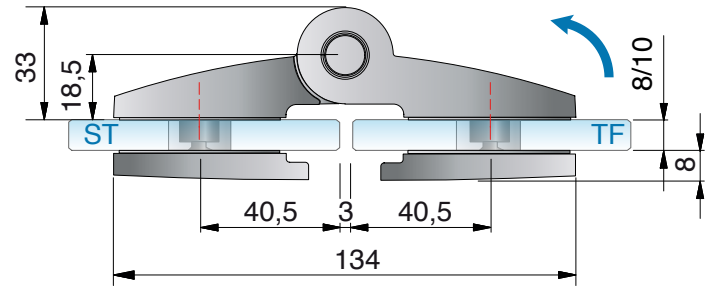

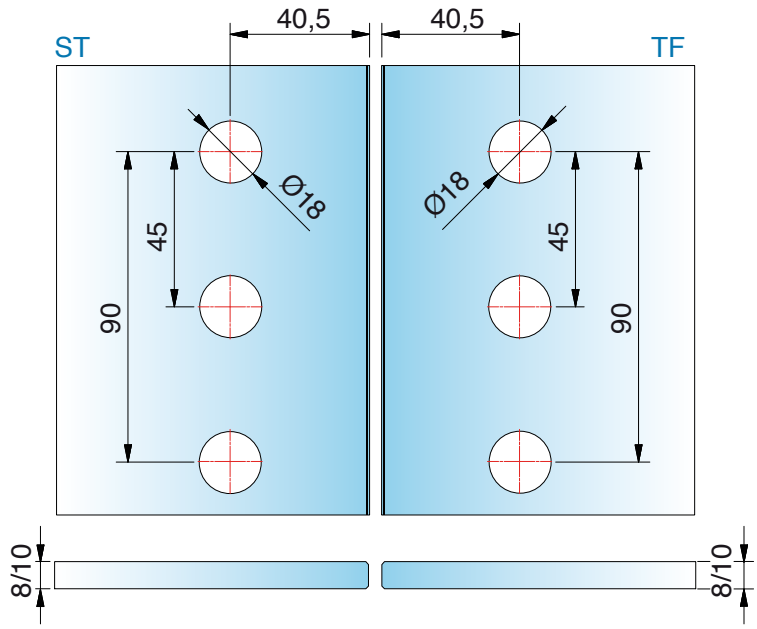

ST = side panel I TF = door panel I W = wall

8968ZN-SN glass-wall 90°

MADE IN GERMANY



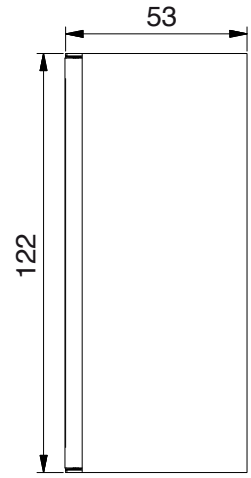

article no.	glass thickness
8968_-SN	8/10/12 mm

finish:

	ZN5	gloss chrome
	ZN1	matt chrome
	ZNPVD22	stainless steel optic
	ZNPVD35	black matt

features: fixed, wall mounting with oblong hole, with cover plate

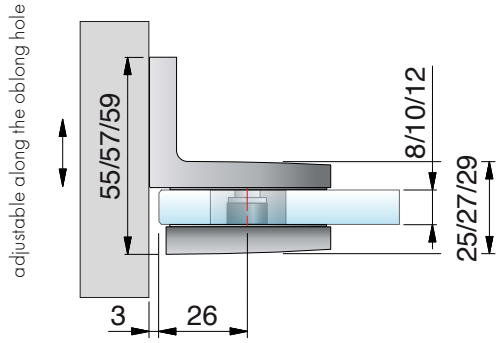

glass processing for 8/10/12 mm

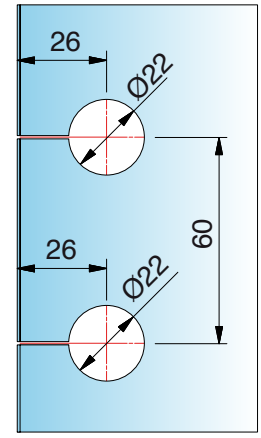

8968ZN-SN glass-wall 90°

MADE IN GERMANY

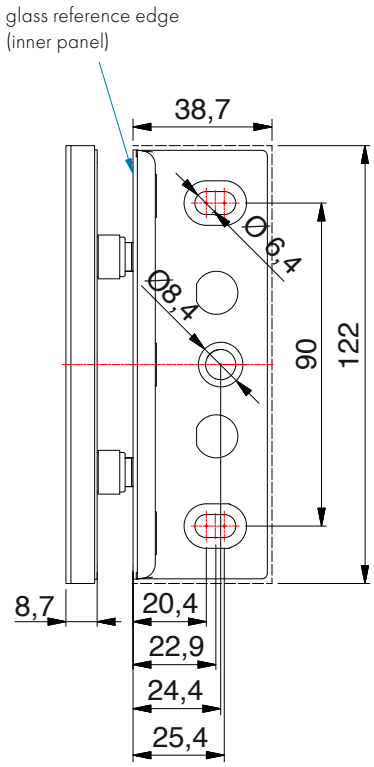



8969ZN glass-glass 90°

MADE IN GERMANY

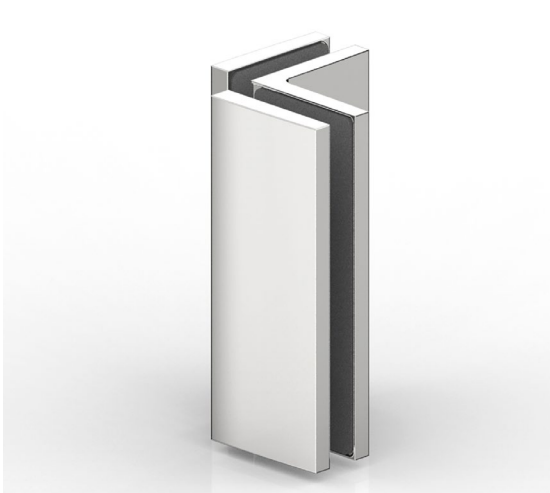

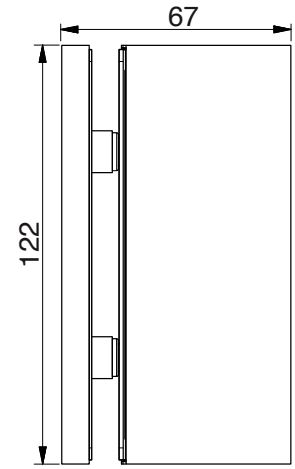

article no.		glass thickness
8969_		8/10/12 mm
finish:		
	ZN5	gloss chrome
	ZN1	matt chrome
	ZNPVD22	stainless steel optic
	ZNPVD35	black matt

features: fixed, with cover plate
*Glass processing for 10 mm can be found on page 401.
You can request the glass processing for 12 mm glass from our technical department.

for glass 8 mm

Glasbearbeitung auf Stoß

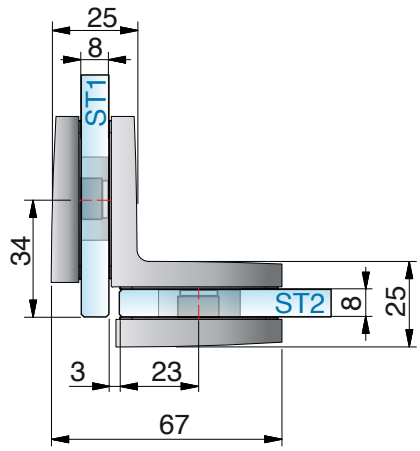

*glass processing for 8 mm

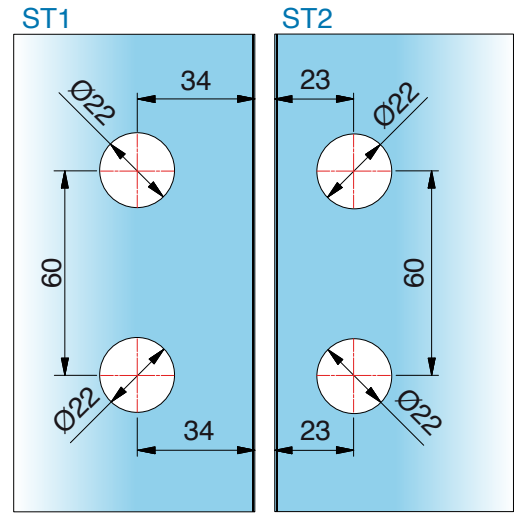

ST = side panel I TF = door panel I W = wall

8969ZN glass-glass 90°

MADE IN GERMANY

for glass 8 mm

Glasbearbeitung auf Gehrung

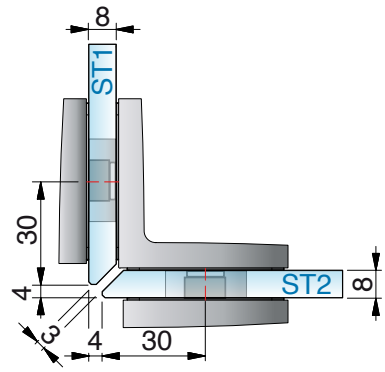

*glass processing for 8 mm

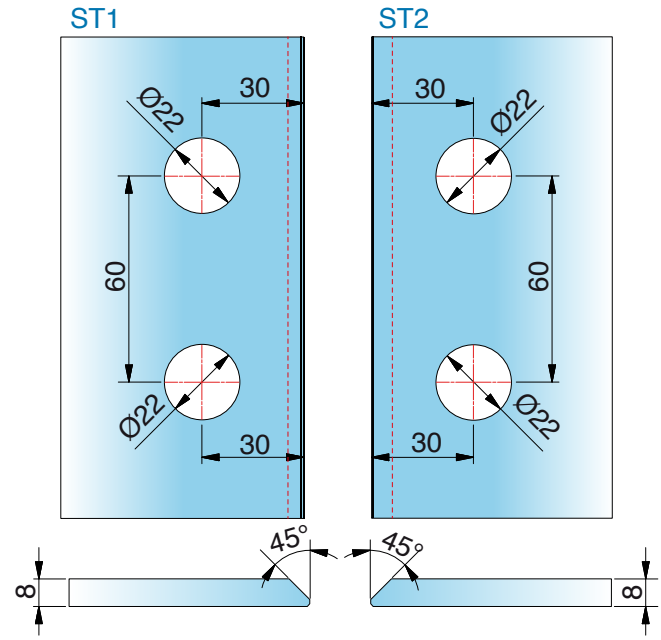

for glass 10 mm

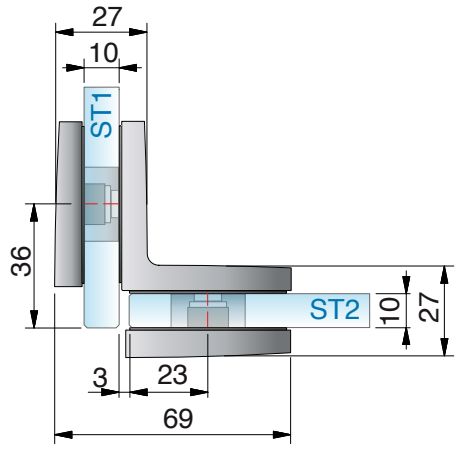

*glass processing for 10 mm

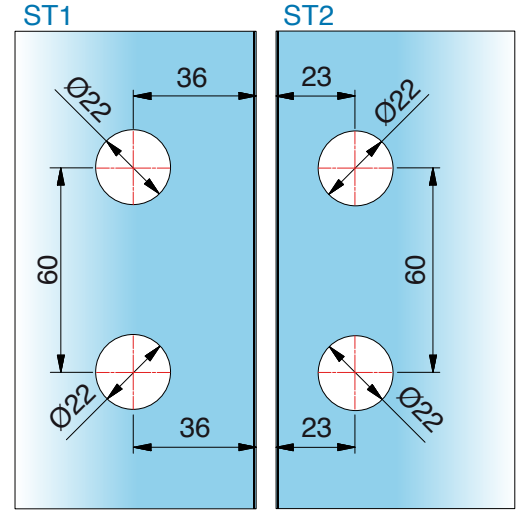

ST = side panel I TF = door panel I W = wall

connection option for side panel



silicon

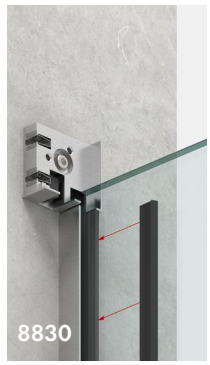



U-profile page 487



angle bracket **FLAMEA⁺**, fixed page 126



angle bracket **FLAMEA⁺**, adjustable, page 130



angle bracket **NIVELLO⁺** page 317



angle bracket, **FLAMEA** page 353



angle bracket, **FLAMEA**, fixed, page 348



angle bracket, **FLAMEA**, adjustable, page 350

our service for you!

glass calculation

Use our new planning tool at www.pauli.de/en to calculate glass sizes.

Need more help? We can support you in every phase of your project. Just give us a call: 02291 9206-0

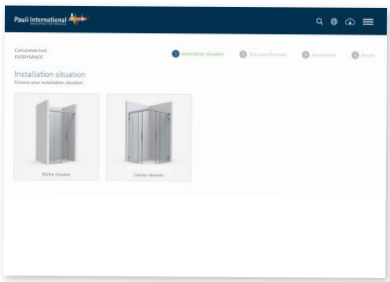

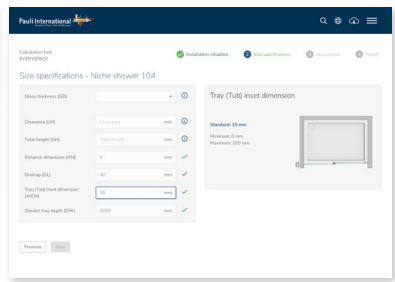

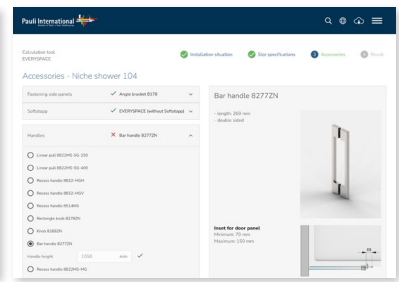

MADE IN GERMANY



sliding door system – EVERYSPACE

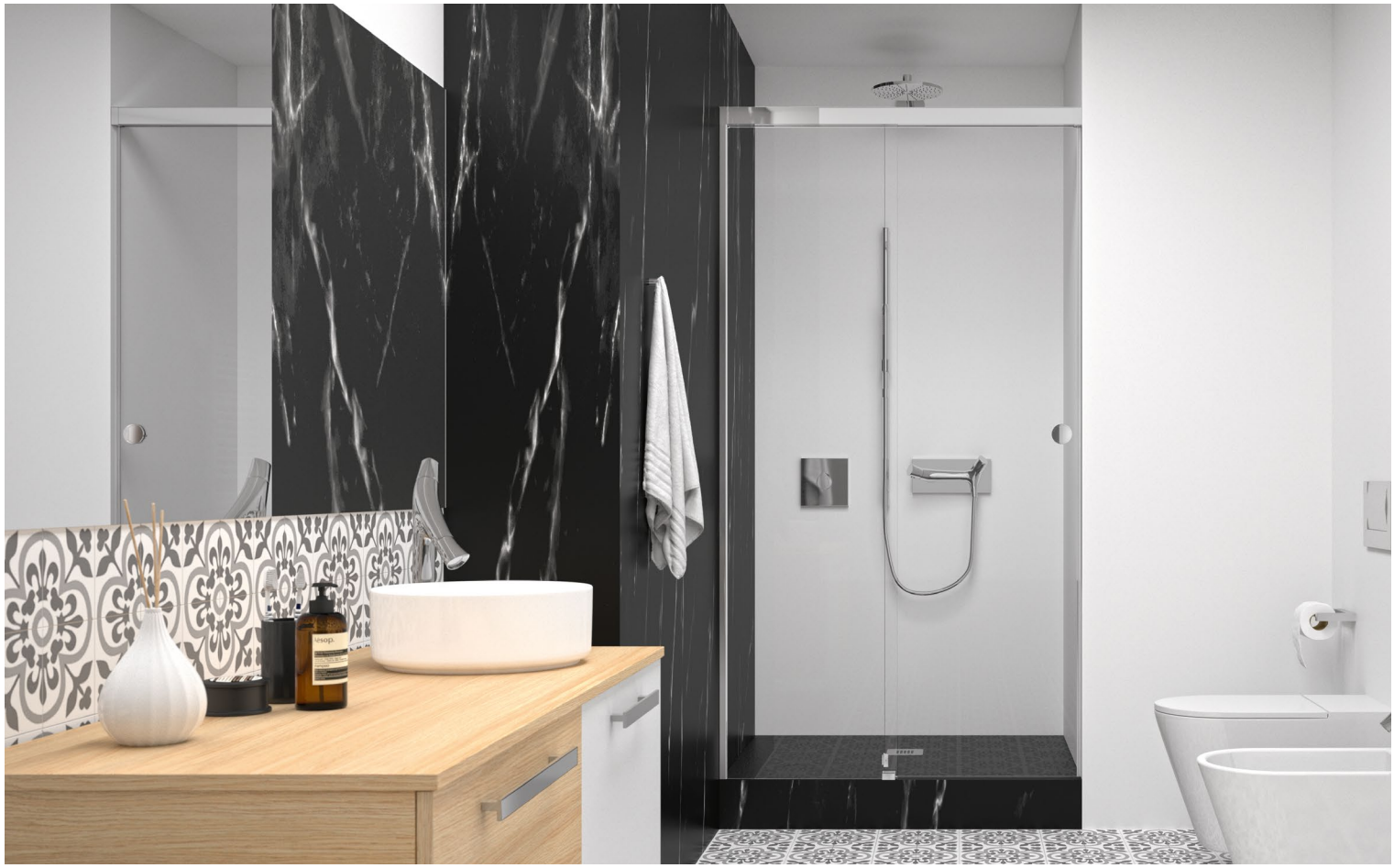

EVERYSPACE – shower more beautifully

MADE IN GERMANY

With EVERYSPACE and EVERYSPACE COMFORT, we have taken the sliding door hardware for the modern bathroom even further. Our focus was on design, ease of installation and reliability.
The system is flexible and versatile - simply ideal for creating lasting value in the commercial and private sectors.

- finish:
  E3/50 – gloss chrome
  E6EV5 – gloss anodized
  E6C35 – black matt
- guide rail can be secured to the side panel without attachment to the wall
- one- or two-sided damping unit (incl. retractable function)
- carriage mounting without glass drilling
- easy height adjustment (± 3 mm)
- with glass thickness control (patent pending)
- door panel easy to install
- floor guide can be separated for easy installation and cleaning
- depending on the position of the shower head, the overlapping glass elements (40 mm) no sealing profile is necessary
- adhesive handles with optimized adhesive force, therefore no glass processing is necessary (other handles are available on request)
- optimized space-saving solutions for small bathrooms

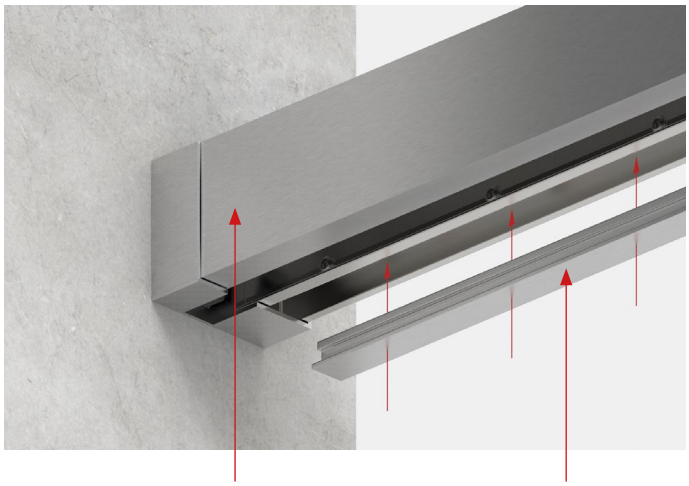

front cover panel for guide rail

filler profile in the upper frame

The system is closed at the bottom with a filler profile. This makes it look very elegant and gives protection from debris and water.

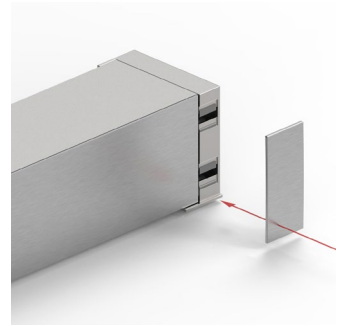

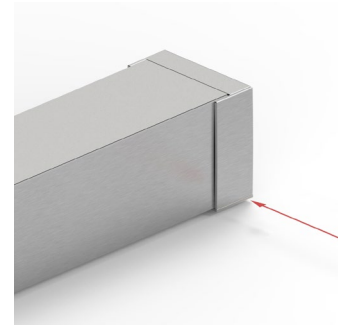

By an overlapping small cap at the ends and corner connectors, any cutting surfaces of the guide rail are elegantly concealed.

floor guide for **easy cleaning**

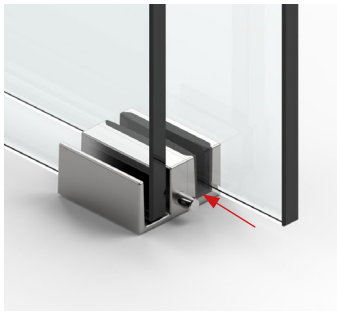

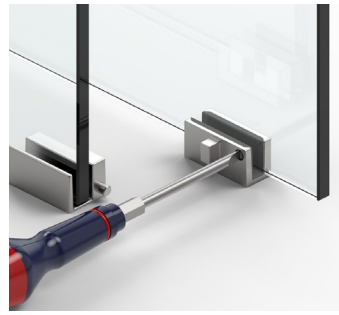

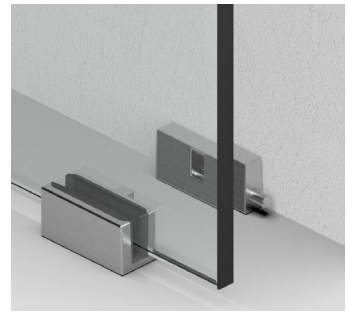

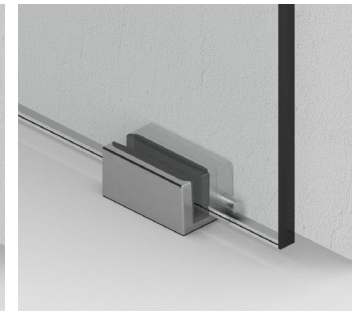

floor guide with release for easier mounting and cleaning, enormous noise reduction due to almost play-free adjustment possibility of the glass thicknesses

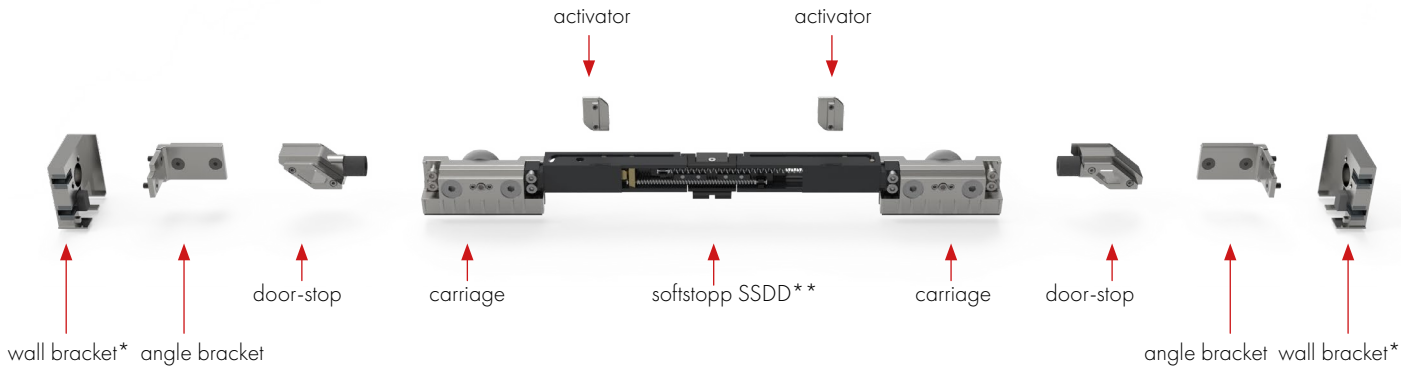

*with integrated buffer function

***powder coated for a better mechanics

connection options **guide rail**

MADE IN GERMANY



guide rail is clamped onto
the side panel



guide rail mounted to
the wall

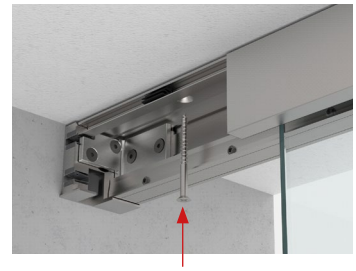

guide rail mounted to **the ceiling**
(factory drilled every 180 mm)



guide rail attached to
the side panel



- guide rail made of high-strength aluminum alloy
- corner connector made of solid high quality zinc die casting
- uniform design of the finish with continuous high gloss chrome plating

function of the **softstopp**

- Activator is fixed in the guide rail and takes the springs with it when opening and closing.

Assembly note:
When hanging the door panels, all springs must be loaded.

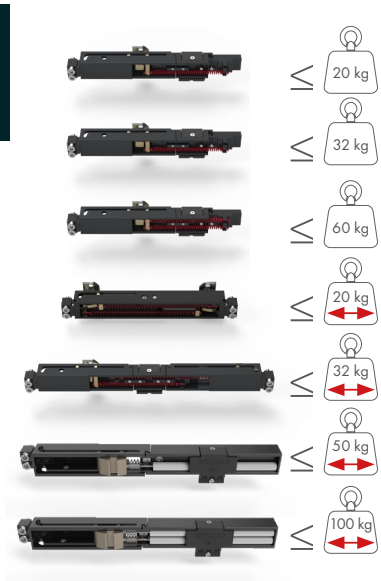

	door width	softstopp variant
8822RAL7016-SSD-20	single sided, stopped from 435 - 1000* mm double sided, stopped from 620 - 1000* mm	softstopp single-sided for small doors
8822RAL7016-SSD-32	single sided, stopped from 435 - 1000* mm double sided, stopped from 620 - 1000* mm	softstopp single-sided for medium doors
8822RAL7016-SSD-60	single sided, stopped from 435 - 1000* mm double sided, stopped from 620 - 1000* mm	softstopp single-sided for large doors
8822RAL7016-SSDD20	380** - 505 mm	double-sided softstopp for small doors
8822RAL7016-SSDD	505 - 620 mm	double-sided softstopp for medium doors
8822RAL7016-SSD50	from 725 mm	softstopp single-sided for large doors
8822RAL7016-SSD100	from 915 mm (in combination with heavy duty carriage)	softstopp single-sided for large doors

activator is in the resting position

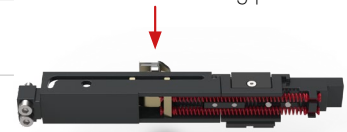

activator loads the spring, is unhooked and the spring remains loaded.



*May vary depending on application
**ONLY NICHE SOLUTIONS, corner applications only possible with supports. Please contact our technical department!

operation of the **glass thickness regulator**

MADE IN GERMANY

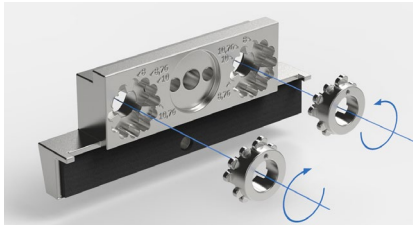

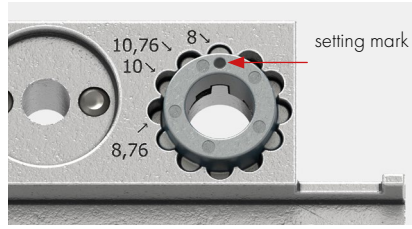

With the patent-pending adjustment option, the glass thickness can be easily regulated. (two adjustment crowns per carriage). There is no need to replace inserts or screws.

- glass thicknesses Mono ESG: 8 and 10 mm
- glass thicknesses LSG made of FTG: 8.76 and 10.76 mm

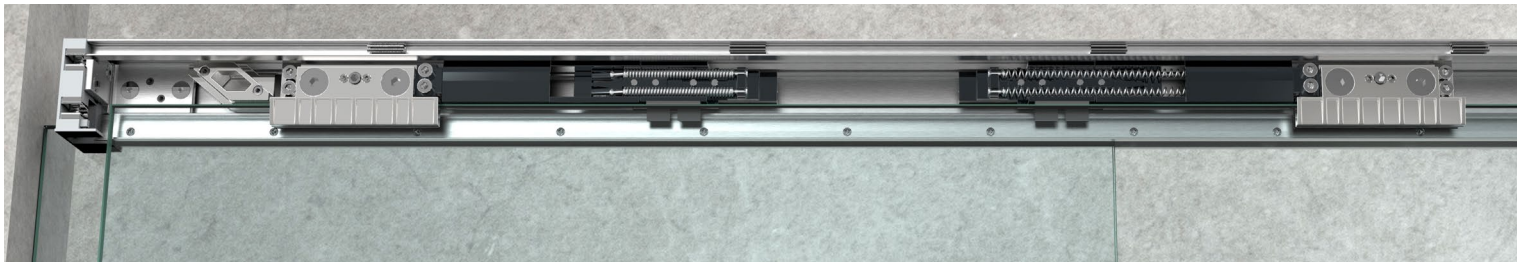

- hardware and attachments made of solid, high-quality zinc die-cast
- rollers made of robust fiberglass-reinforced polyamide

height adjustment

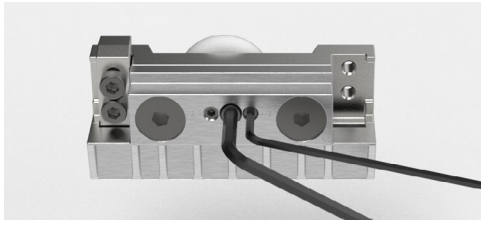

zero setting

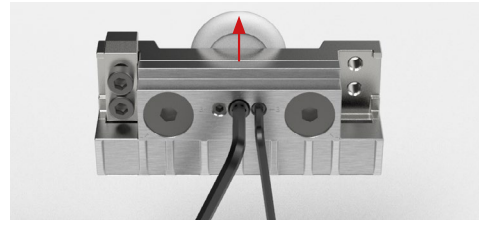

- The height adjustment of the door panel is done by means of an excenter in the carriage and can be adjusted by +/–3 mm. Before hanging the door, this must be set to zero..

anti-lift device

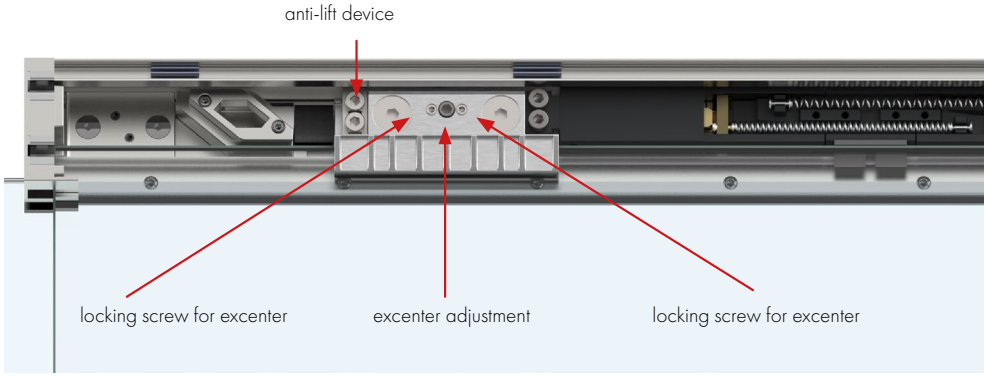

type overview **niche shower**

MADE IN GERMANY

type 104 (L/R)	type 105 (L/R)	type 106
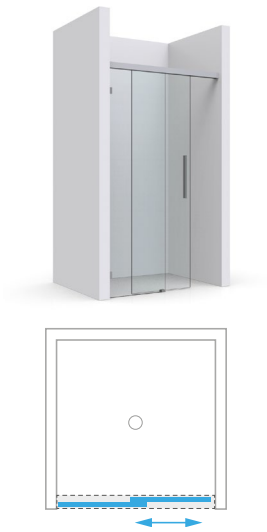		



article no. **8823**

niche shower – wall mounting



All types also possible with ceiling mounted (article no. 8824)

type-overview **corner showers**



type 209
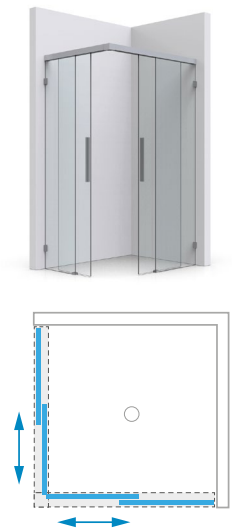



article no. **8825**

corner shower – guide rail all sided

type overview **corner shower**

MADE IN GERMANY

type 204 (L/R)	type 213
	
	



article no. **8825**

corner shower – guide rail all sided



article no. **8827**

corner shower – guide rail mounted to the glass panel



All types also possible with ceiling mounted (article no. 8826) .

type overview **U shower**

type 403 (L/R)



type 406





article no. **8828**

U shower – guide rail all sided







article no. **8831**

U shower – guide rail mounted to the glass



All types also possible with ceiling mounted (article no. 8829) .

type overview **bathtub solution**

MADE IN GERMANY

type 601 (L/R)





article no. **8832**

bathtub solution –
guide rail all sided



All types also possible with ceiling mounted (article no. 8833).

type overview **bathtub solution**

MADE IN GERMANY

type 611



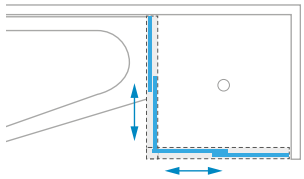



article no. **8834**

bathtub solution –
guide rail mounted to the glass

type 615 (L/R)



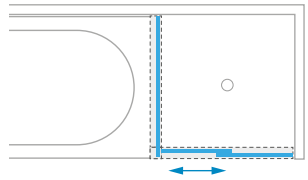



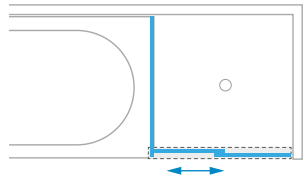



article no. **8832**

bathtub solution –
guide rail all sided





niche showers **– type 104**



niche showers **– type 104 L/R** (example: door closes left)

MADE IN GERMANY



TF ST

standard sizes (LM) and **entry dimension (DM):**

8823_-104L/R-120:
LM: 950 – 1200 mm DM = max. 540 mm

8823_-104L/R-140:
LM: 1200 – 1400 mm DM = max. 640 mm

8823_-104L/R-160:
LM: 1400 – 1600 mm DM = max. 740 mm

8823_-104L/R-180:
LM: 1600 – 1800 mm DM = max. 840 mm

other sizes on request!

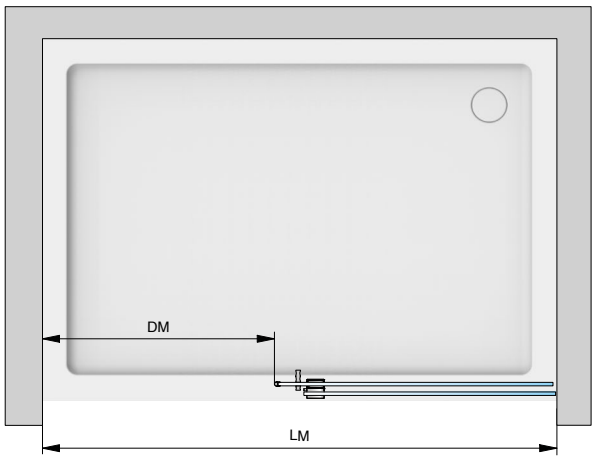

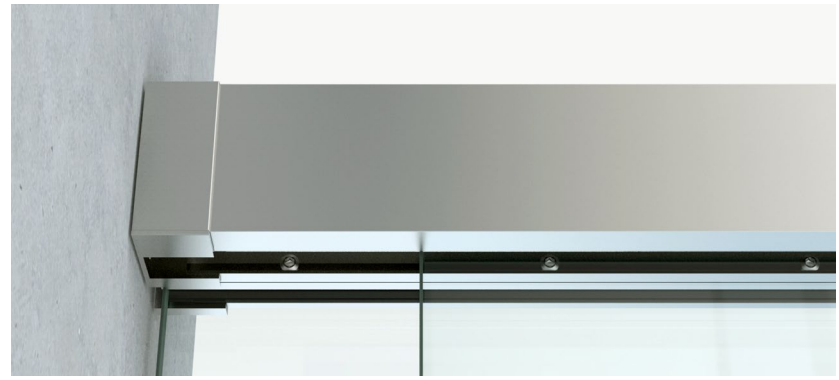

guide rail **mounted to the wall**

basic contents

article no.	piece	article description
8822ZNOP-LW	1x	set with 2 carriages
8822ZN_-BFL-8	1x	floor guide
8820-40_	1x	guide rail
8820-41_	1x	front cover panel
8820-42_	1x	pressure bar for side panel in top frame
8820-43_	1x	filler profile in the top frame
8822ZN_-EL	1x	wall bracket on the side panel
8822ZN_-WR	1x	wall bracket at the doorway
8861KU0-8-2500	1x	sealing profile
8820-87	1x	installation aid for edge distances

contents depending on size

article no.	piece	article description
8822ZN0-BWR	1x	angle bracket for big showers right
8822ZN0-BWL	1x	angle bracket for big showers left
8822ZN0-BW	2x	angle bracket for small showers
8822RAL7016-SSDD-20	1x	softstopp double-sided (20 kg)
8822RAL7016-SSDD	2x	softstopp double-sided (32 kg)
8822RAL7016-SSD-32	2x	softstopp single-sided (32 kg)
8822RAL7016-SSD-60	2x	softstopp single-sided (60 kg)
8822MS_-AS	1x	door-stop on the door panel
8822VA-AP	1x	door-stop in the wall bracket
8820-55KU	8–12x	plastic clips for cover (quantity depending on size)

niche showers **– type 104 L/R** (example: door closes left)

MADE IN GERMANY

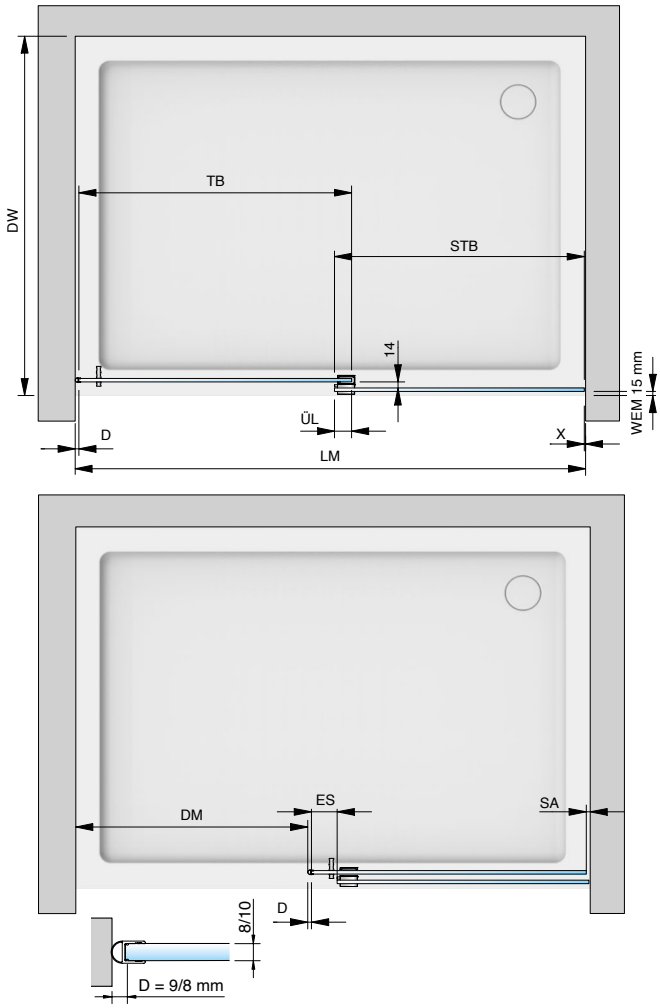

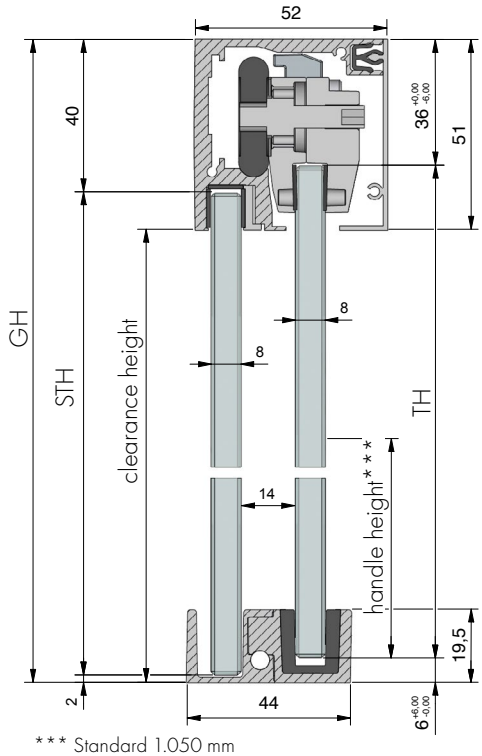

*** Standard 1.050 mm

legend:

LM	=	total clearance
DW	=	shower tray
GH	=	total height
TF	=	door panel
TB	=	door width
TH	=	door height
ST	=	side panel
STB	=	side panel width
STH	=	side panel height
DM	=	threshold dimension
ÜL	=	side panel door overlap (** empfohlen 40 mm)
ES	=	side panel door overlap (recommended 60 mm)
SA	=	stopper distance
D	=	seal
RA	=	edge distance
WEM	=	tray inset dimension
X	=	detail of side panel mounting (depending on hardware)

rule of thumb*

side panel width (STB)	=	LM/2 – 10
side panel height (STH)	=	GH – 42
door width (TB)	=	LM/2 + ÜL**
door height (TH)	=	GH – 42
length of guide rail / cover	=	LM – 25

* The rules of thumb serve only for rough dimensioning. In case of planning errors, no claims for compensation can be made.
For the exact calculation of the glass panels, please use our calculation tool at www.pauli.de or contact our application technicians.

** recommended 40 mm

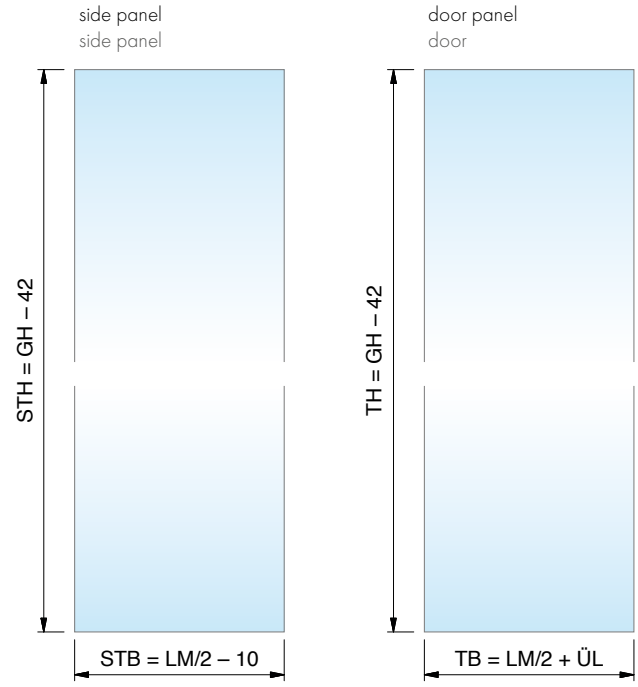

niche showers **– type 104 L/R** (example: door closes left)

article no.	article description
8823__-104L120	EVERYSPACE niche shower – type 104 L/R (example: door closes left), without Softstopp

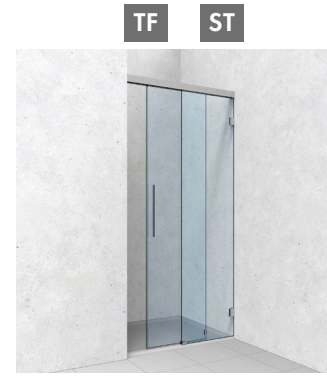

total clearance (LM) from **950 – 1200 mm**



wall bracket on the side panel
article no.: 8822ZN_-EL/ER



wall bracket at the doorway
article no.: 8822ZN_-WL/WR

view from inside

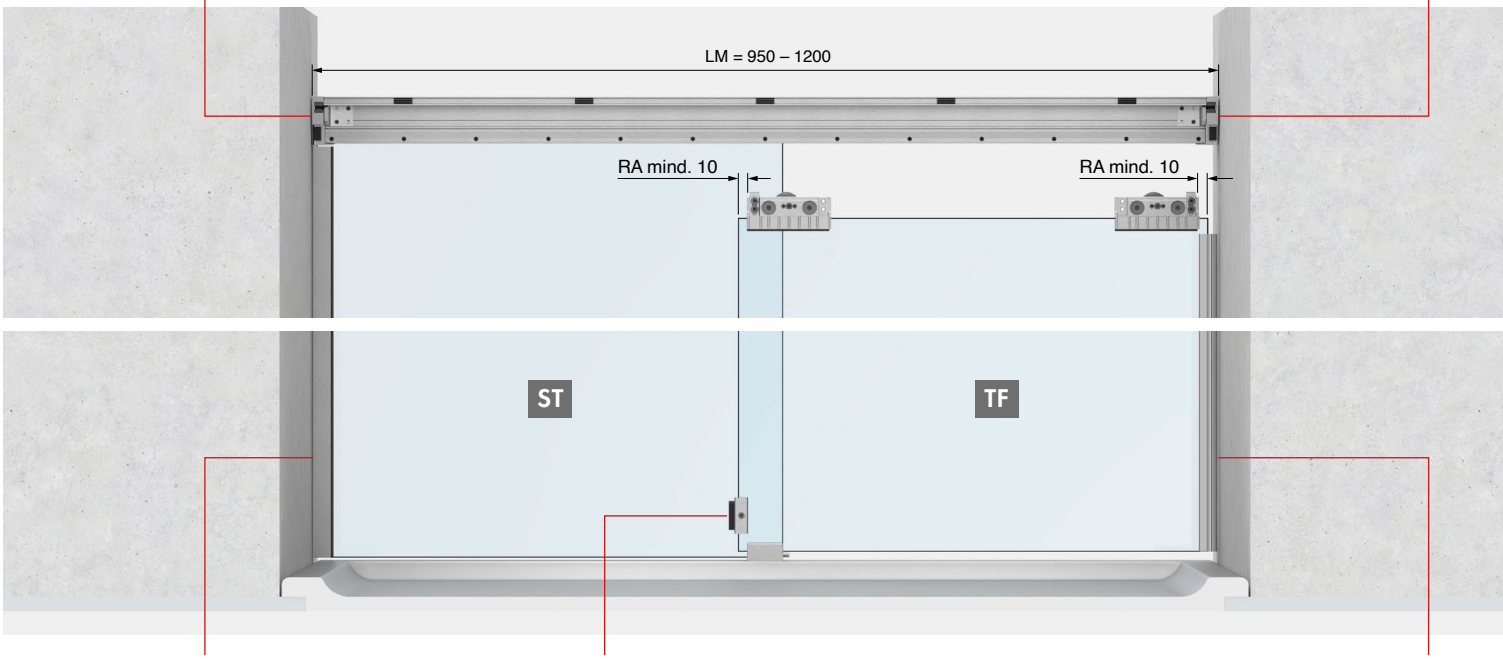



example U-Profil 8830
see page 487



door-stop on the door panel
article no.: 8822MS_-AS

optional



softstopp single-sided (20 kg)
article no.: 8822RAL7016-SSD-20



article no.:8861KU0-8-2500

TF ST

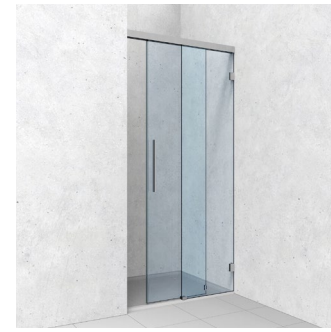

niche showers **– type 104 L/R** (example: door closes left)

article no.	article description
8823__-104L120S	EVERYSPACE **COMFORT** niche shower – type 104 L/R (example: door closes left), with 1x Softstopp SSDD

total clearance (LM) from **950 – 1200 mm**



wall bracket on the side panel
article no.: 8822ZN_-EL/ER

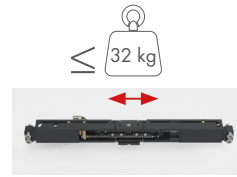

softstopp double-sided (32 kg)
article no.: 8822RAL7016-SSDD



wall bracket at the doorway
article no.: 8822ZN_-WL/WR

view from inside

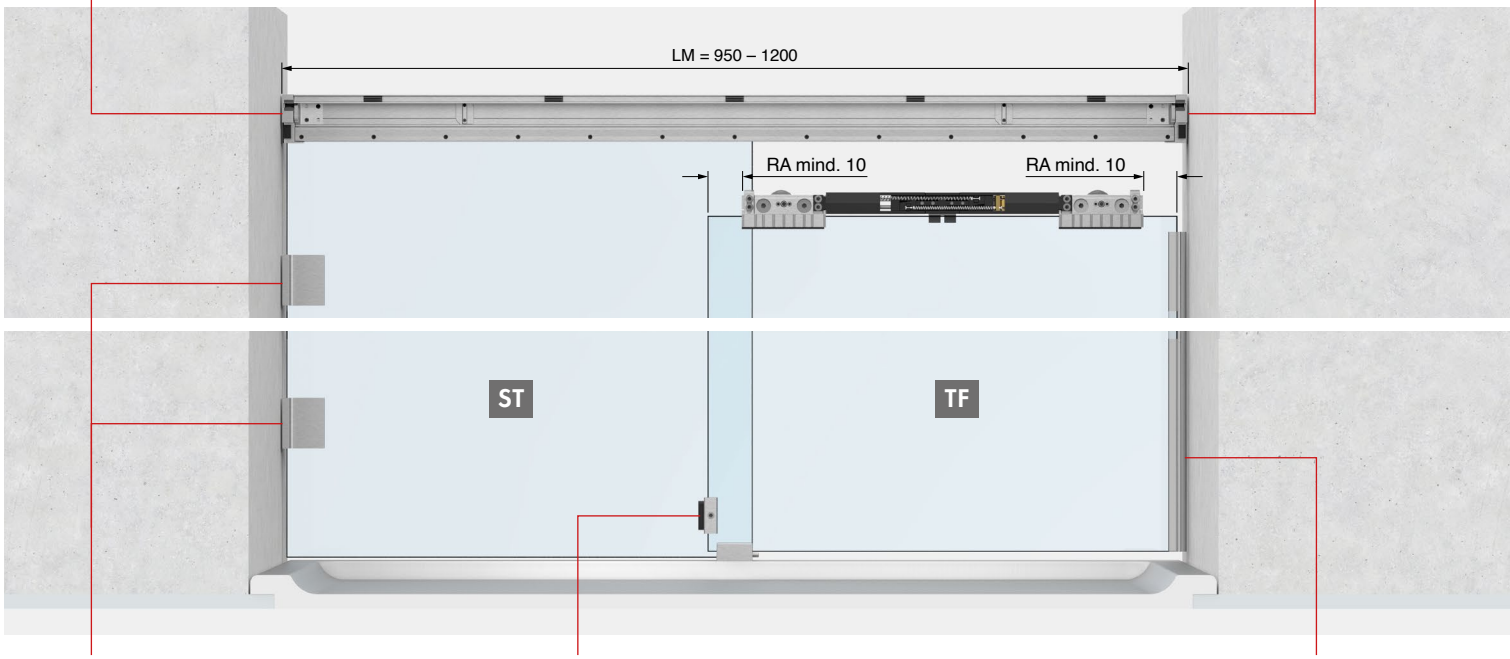

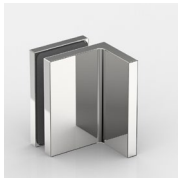

example FLAMEA+ 8194ZN
see page 126



door-stop on the door panel
article no.: 8822MS_-AS

optional



also possible without softstopp.
article no.: 8823__-104L120



article no.: 8861KU0-8-2500



corner showers – **type 209**



corner showers – type 209

MADE IN GERMANY



ST TF TF ST

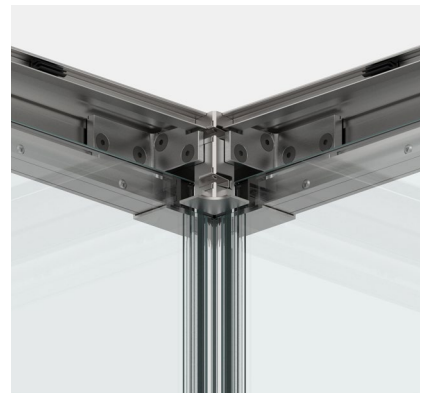

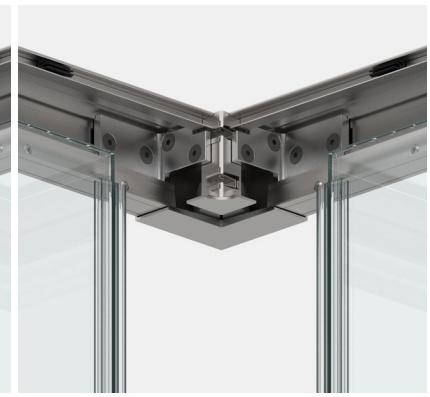

corner connector for **corner entry**

standard sizes (LM) and **threshold dimension (DM):**
8825_-209-100: LM: 750 – 1000 mm DM = max. 580 mm
8825_-209-120: LM: 950 – 1200 mm DM = max. 720 mm
8825_-209-140: LM: 1200 – 1400 mm DM = max. 860 mm
8825_-209-160: LM: 1400 – 1600 mm DM = max. 1000 mm
other sizes on request!

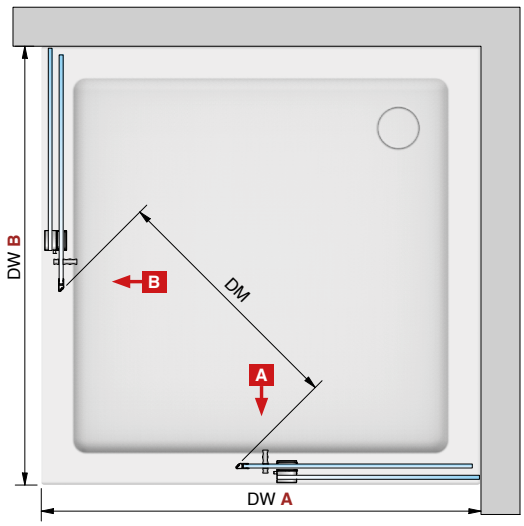

basic contents

article no.	piece	article description
8822ZNOP-LW	2x	set with 2 carriages
8822ZN_-BFL-8	1x	floor guide left
8822ZN_-BFR-8	1x	floor guide right
8820-40_	2x	guide rail
8820-41_	2x	front cover panel
8820-42_	2x	pressure bar for side panel in top frame
8820-43_	2x	filler profile in the top frame
8822ZN_-EL	1x	wall bracket on the side panel left
8822ZN_-ER	1x	wall bracket on the side panel right
8822ZN_-ETT90	1x	Eckverbinder für Eckeinstieg
8851KU0-8-2500	1x	sealing profile
8820-87	1x	installation aid for edge distances

contents depending on size

article no.	piece	article description
8822ZN0-BWR	2x	angle bracket for big showers right
8822ZN0-BWL	2x	angle bracket for big showers left
8822ZN0-BW	4x	angle bracket for small showers
8822RAL7016-SSDD-20	2x	softstopp double-sided (20 kg)
8822RAL7016-SSDD	2x	softstopp double-sided (32 kg)
8822RAL7016-SSD-32	4x	softstopp single-sided (32 kg)
8822RAL7016-SSD-60	4x	softstopp single-sided (60 kg)
8822MS_-AS	2x	door-stop on the door panel
8822VA-AP	2x	door-stop in the wall bracket
8820-55KU	10 – 16x	plastic clips for cover (quantity depending on size)

corner showers – type 209

MADE IN GERMANY

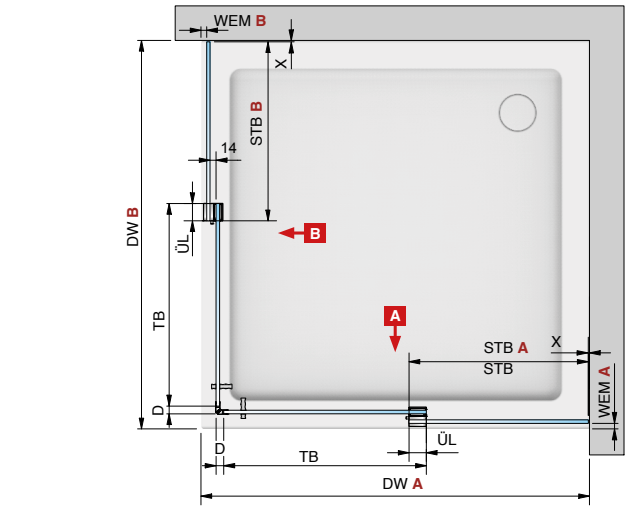

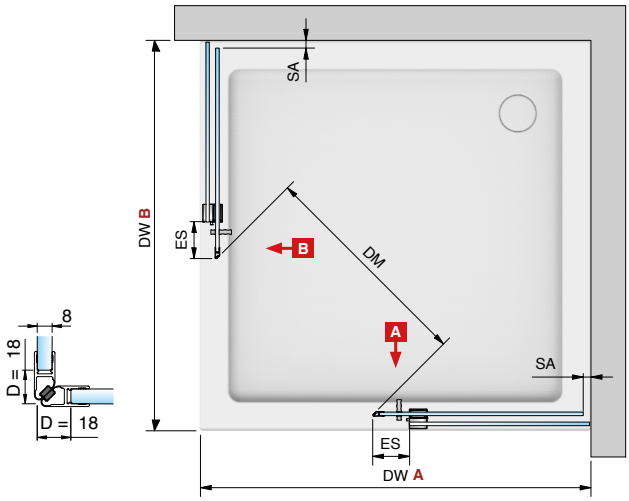

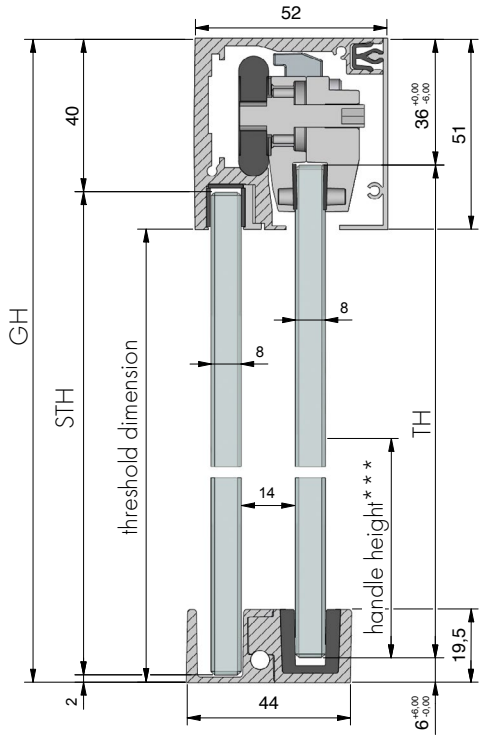

*** Standard 1.050 mm

legend:

LM	=	total clearance
DW	=	shower tray
GH	=	total height
TF	=	door panel
TB	=	door width
TH	=	door height
ST	=	side panel
STB	=	side panel width
STH	=	side panel height
DM	=	threshold dimension
ÜL	=	side panel door overlap (** recommended 40 mm)
ES	=	side panel door overlap (recommended 60 mm)
SA	=	stopper distance
D	=	seal
RA	=	edge distance
WEM	=	tray inset dimension
X	=	detail of side panel mounting (depending on hardware)

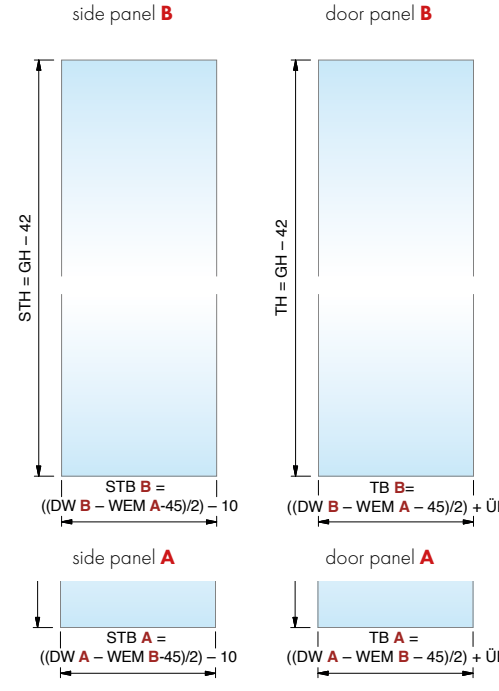

rule of thumb*

** empfohlen 40 mm

side panel width (STB) **B**	=	((DW **B** – WEM **A**-45)/2) – 10
side panel width (STB) **A**	=	((DW **A** – WEM **B**-45)/2) – 10
side panel height (STH)	=	GH – 42
door width (TB) **B**	=	((DW **B** – WEM **A** – 45)/2) + ÜL**
door width (TB) **A**	=	((DW **A** – WEM **B** – 45)/2) + ÜL**
door height (TH)	=	GH – 42
length of guide rail / cover **B**	=	DW **B** – WEM **A** – 64
length of guide rail / cover **A**	=	DW **A** – WEM **B** – 64

* The rules of thumb serve only for rough dimensioning. In case of planning errors, no claims for compensation can be made.
For the exact calculation of the glass panels, please use our calculation tool at www.pauli.de or contact our application technicians.

corner showers – **type 209**

MADE IN GERMANY

article no.	article description
8825__-209-120S	EVERYSPACE **COMFORT** corner shower, with double sided Softstopp SSDD

shower tray (DW) from **950 – 1200 mm**

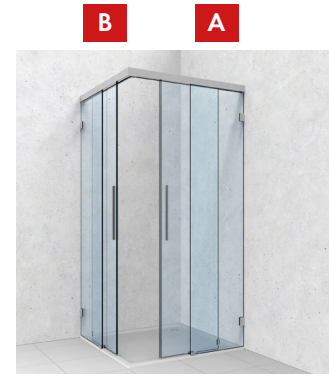



wall bracket on the side panel
article no.: 8822ZN_-EL/ER



softstopp double-sided (32 kg)
article no.: 8822RAL7016-SSDD

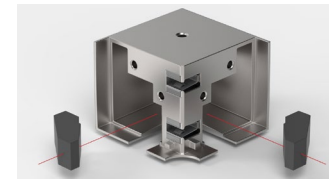

corner bracket
article no.: 8822ZN_-ETT90

view from inside

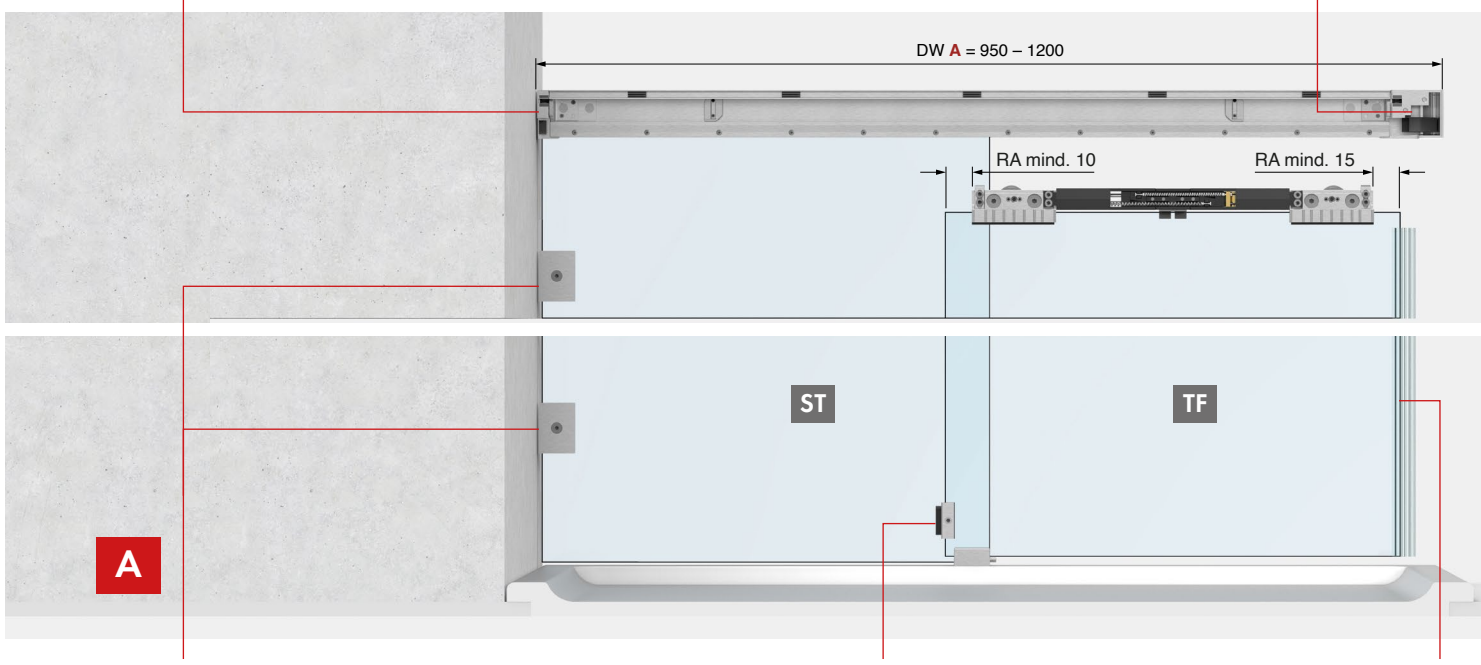



angle bracket – 8178ZN
see page 353

optional

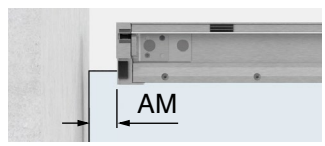

guide rail clamped onto the side panel
further info in the technical catalog on page 78



door-stop on the door panel
article no.: 8822MS_-AS

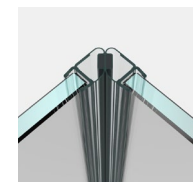

article no.: 8851KU0-8-2500

corner showers – **type 209**

MADE IN GERMANY

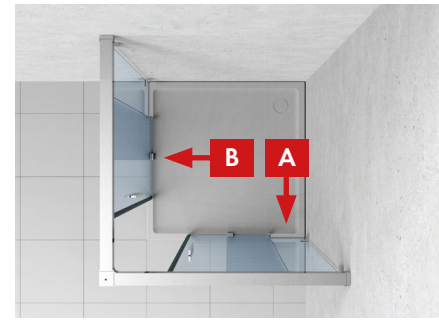

shower tray (DW) from **950 – 1200 mm**

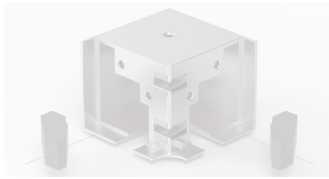



softstopp double-sided (32 kg)
article no.: 8822RAL7016-SSDD



wall bracket on the side panel
article no.: 8822ZN_-EL/ER

view from inside

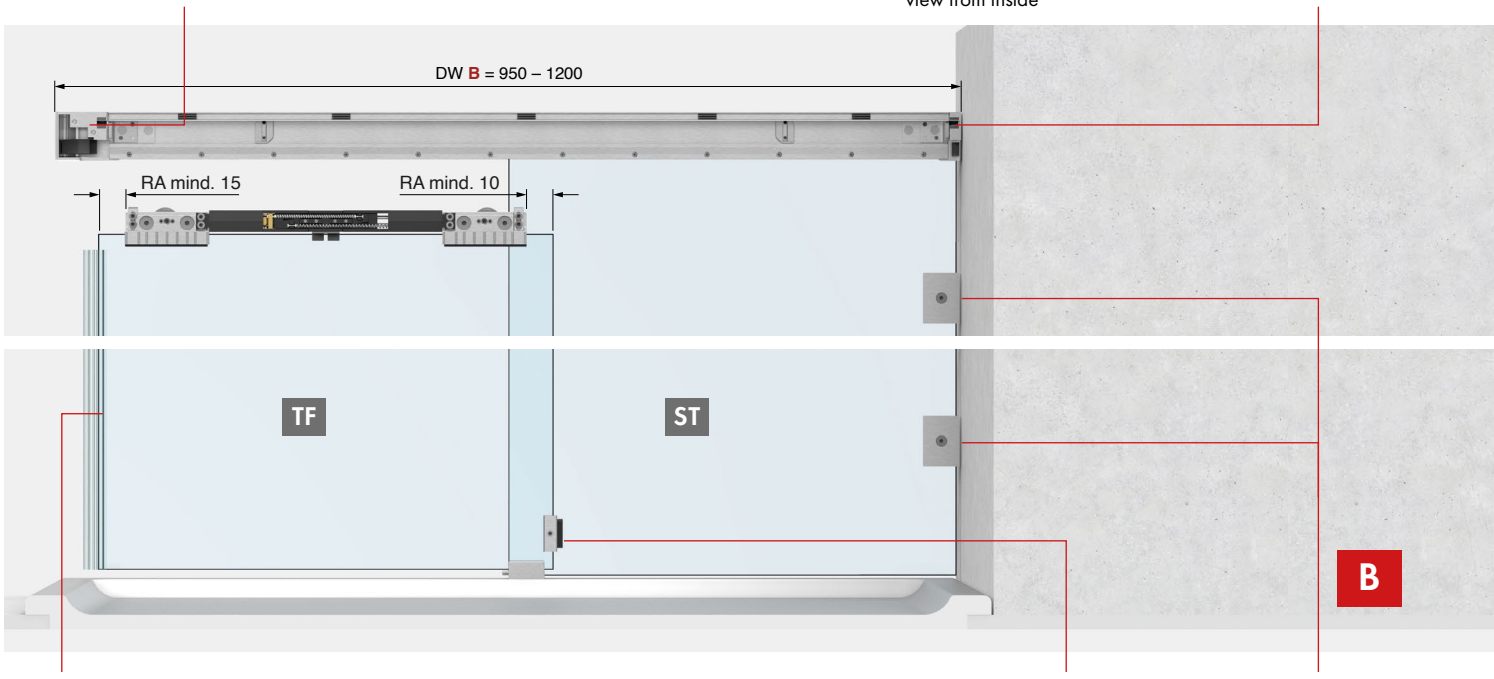

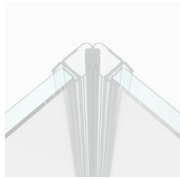

optional



also possible without softstopp.
article no.: 8825__-209-120



door-stop on the door panel
article no.: 8822MS_-AS



angle bracket – 8178ZN
see page 353

handles

MADE IN GERMANY



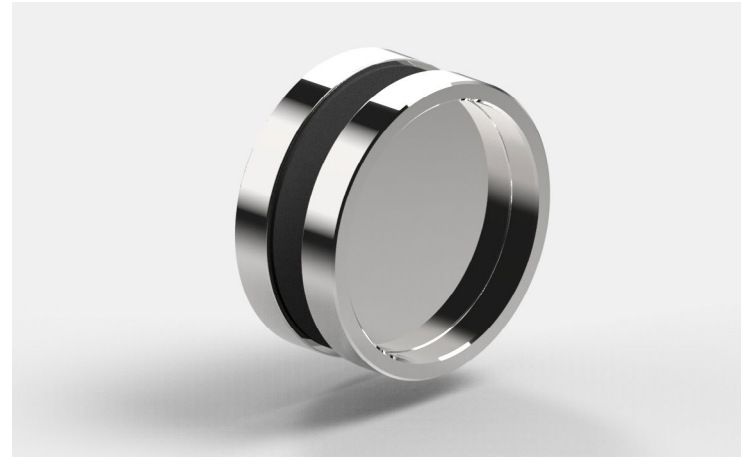

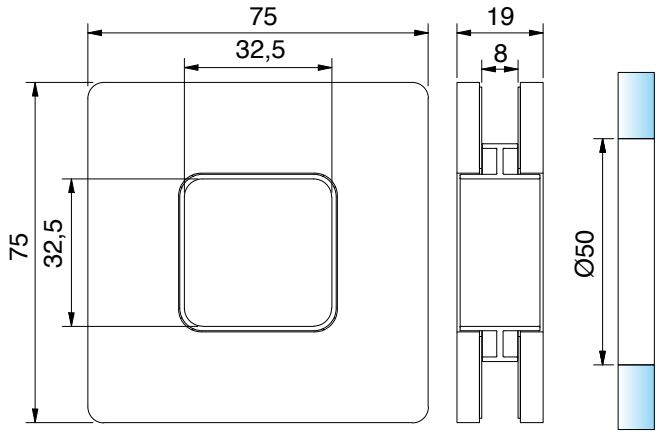

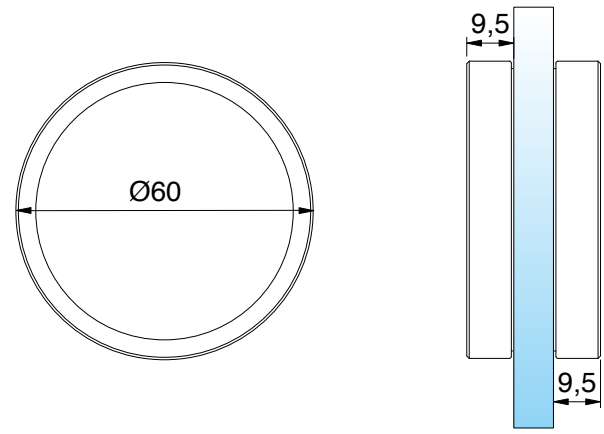

recess knob, open,, self-adhesive, raised 5,5 mm

Art.-Nr.	Glasdicke
8371__	8 mm

Oberfläche

	MS7	gloss chrome
	MS10	matt chrome
	MSPVD22	stainless steel optic
	MSPVD35	deep black matt

recess knob, self-adhesive, raised 9,5 mm, without glass processing

Art.-Nr.	Glasdicke
8822__-MG	6 - 13,52 mm

Oberfläche

	MS7	gloss chrome
	E6EV1	alu optic
	MSPVD35	stainless steel
	VA	stainless steel
	VA1	stainless steel polished

note:
The self-adhesive handles may not be bonded to coated glass. The surface must be cleaned and degreased before attaching (kein Spiritus verwenden). Press the handles firmly after bonding, e.g. apply pressure with a clamp.

handles

MADE IN GERMANY





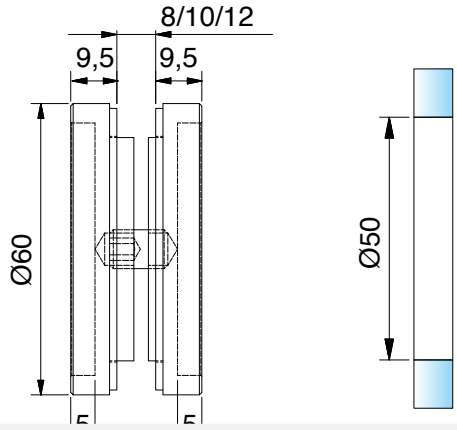

recess knob closed, Ø 60 mm, raised 9,5 mm

article no.	glass thickness
8514__	8 - 12 mm

finish

	MS7	gloss chrome
	VA	stainless steel
	VA135	deep black matt powder coated

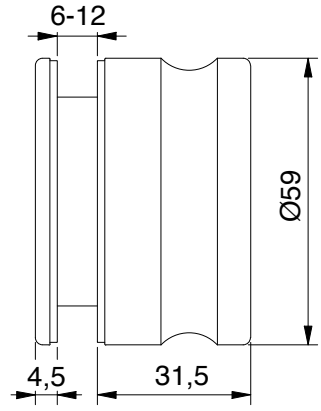

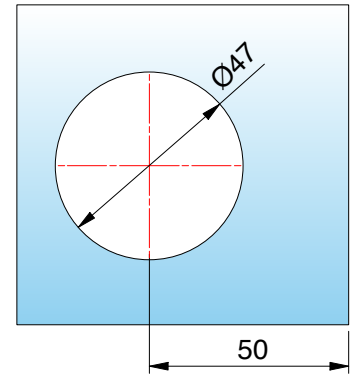

knob double-sided, threaded

article no.	glass thickness
8822VA-MGE	6 - 12 mm

finish

	VA	stainless steel



inner side with recess

handles

MADE IN GERMANY





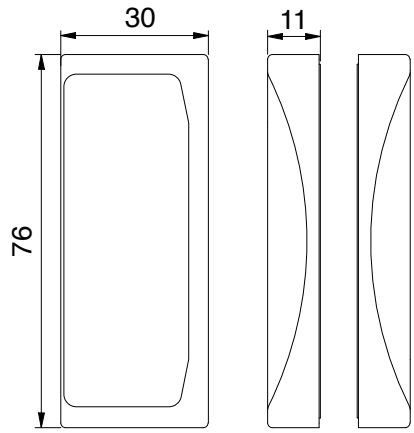

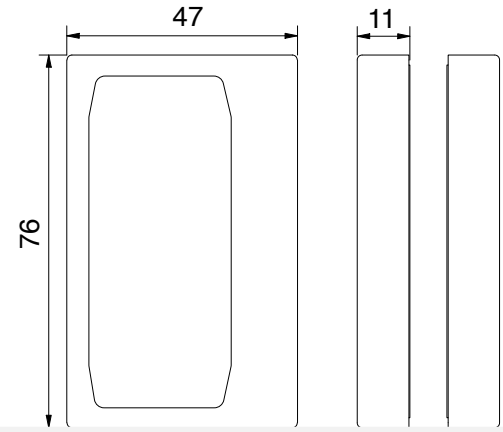

glass door knob double sided, self-adhesive			
article no.		glass thickness	
8822__-MGH		6 - 13,52 mm	
finish			
	ZN5	gloss chrome	
	ZN1*	matt chrome	
	ZNPVD20*	gold optic	
	ZNPVD22*	stainless steel optic	
	ZN135	deep black matt	

glass door knob double sided, self-adhesive			
article no.		glass thickness	
8822__-MGV		6 - 13,52 mm	
finish			
	ZN5	gloss chrome	
	ZN1*	matt chrome	
	ZNPVD20*	gold optic	
	ZNPVD22*	stainless steel optic	
	ZN135	deep black matt	

*article discontinued

note:
Coatings on the glass in combination with adhesive handles are not permitted. Before sticking on the handles, the glass must be cleaned with a residue-free degreasing agent (do not use spirit). After sticking on the handles, press them firmly for approx. 20 minutes, e.g. with a clamp.

handles

MADE IN GERMANY



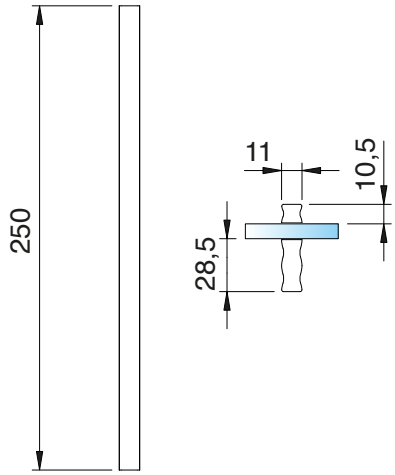

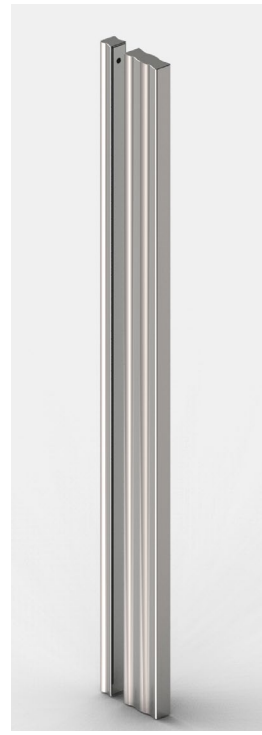

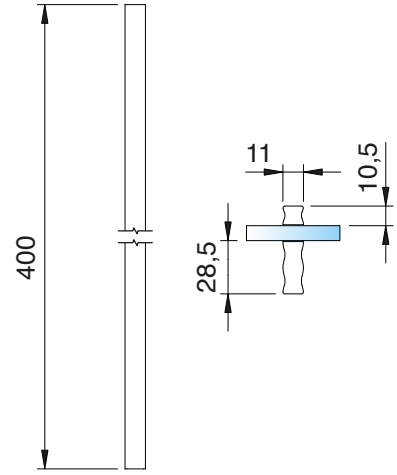

glass door handle self-adhesive		
article no	glass thickness	
8822MS__-SG-250	6 - 13,52 mm	
finish:		
MS7	gloss chrome	
MSPVD35	black matt	

glass door handle self-adhesive		
article no	glass thickness	
8822MS__-SG-400	6 - 13,52 mm	
finish:		
MS7	gloss chrome	
MSPVD35	black matt	

note:
Coatings on the glass in combination with adhesive handles are not permitted. Before sticking on the handles, the glass must be cleaned with a residue-free degreasing agent (do not use spirit). After sticking on the handles, press them firmly for approx. 20 minutes, e.g. with a clamp.

assembly aid

MADE IN GERMANY



article no.

8822KU-ML



assembly aid for glass door handle, self-adhesive









note:
Coatings on the glass in combination with adhesive handles are not permitted. Before sticking on the handles, the glass must be cleaned with a residue-free degreasing agent (do not use spirit). After sticking on the handles, press them firmly for approx. 20 minutes, e.g. with a clamp.

assembly aid

MADE IN GERMANY



article no.	
8001ST8	
torque wrench with setting scale (2,5-25 Nm) - automatic triggering	



8001ST8, torque wrench with setting scale		
size = maximum torque	25	Nm
tightening value (scale range)	2,5-25	Nm
scale graduation, 1 graduation =	0,1	Nm
overall length	230	mm
weight	0,4	kg
square drive inch	1/4"	Zoll

custom solutions

MADE IN GERMANY

The versatility of **EVERYSPACE** and **EVERYSPACE COMFORT** knows almost no limits. There are many possibilities to use our sliding door system in the commercial and private sector. For small layouts, the system shows its strengths to its advantage.

Thanks to its **high load-bearing capacity and the many installation options**, it is equally suited for large bathrooms an





*with new floor guide 3447ZN_-BFD

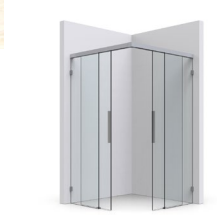

handicapped accessible installation situation with large corner entry and barrier-free floor

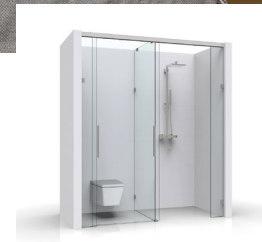

clever solutions for the commercial and hotel sector: 2 in 1 combination of shower and toilet







refined bath and walkin solutions

technical summary

MADE IN GERMANY

materials
- guide rail made of high-strength aluminum alloy
- hardware and attachments made of solid, high-quality zinc die-cast
- rollers made of robust fiberglass-reinforced polyamide

surface
- E3/50 – gloss chrome
- E6EV5 – gloss anodized
- E6C35 – black matt

system features
- guide rail can be fastened directly to the side panel, without
- screw connection to the wall
- side panel without complex silicone fixation to the guide rail
- single or double-sided dampening unit (incl. retraction function)
- guide rail fastening without glass holes
- simple height adjustment (± 3 mm)
- with patent-pending glass thickness adjustment
- door panel easy to hang in place
- floor guide is separable for easy installation and cleaning
- depending on the position of the shower head, no sealing profile is required for the overlapping glass elements (40 mm) no sealing profile is necessary.
- bonding handles with optimized adhesive force, therefore no glass processing
- necessary (other handles are also available on request)
- optimized space-saving solutions for small bathrooms

glass thickness	FTG: 8 and 10 mm LSG with FTG: 8.76 and 10.76 mm
maximum door weight	32 kg / 60 kg (with and without damper)
maximum system height	2500 mm
maximum system width/depth	2500 mm depending on the installation situation. contact our application technicians.
maximum door panel width	1000 mm
minimum door panel width	400 mm
aspect ratio	maximal 5 : 1
adjustment options	with patent-pending glass thickness adjustment height adjustment ±3 mm

our service

MADE IN GERMANY

measurement aids

On **pauli.de/en** you will find different measurement sheets for easy planning and realization of your project. Our application technicians are at your disposal.

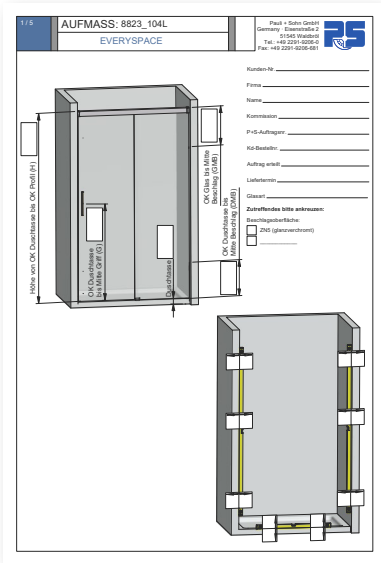

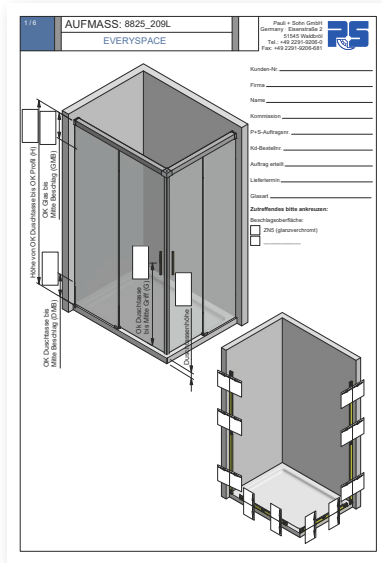

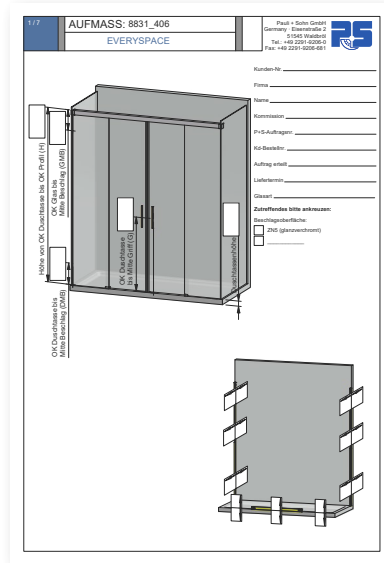

glass calculation

Use our new planning tool at **pauli.de/en/cloud** for the calculation of glass sizes. Need more help? We can support you in every phase of your project. Just give us a call – 02291 9206 0.

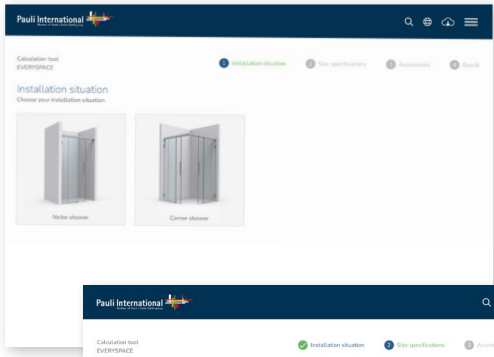

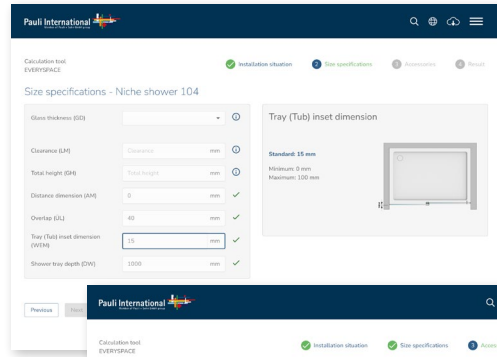

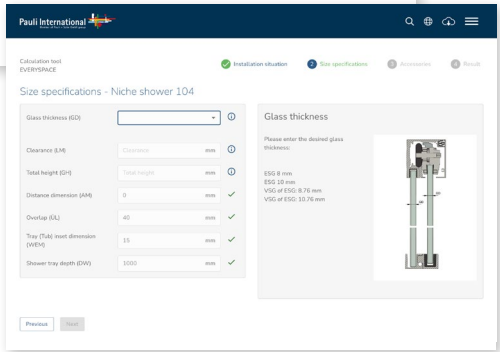

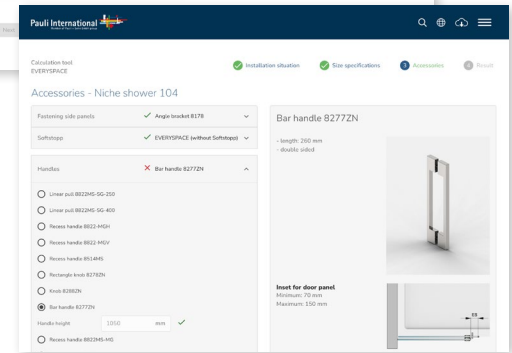

www.pauli.de/en/login

our service

MADE IN GERMANY



PDF (20 MB)

Many more technical details about EVERYSPACE and EVERYSPACE COMFORT can be found in our extensive technical catalog.
pauli.de/en/service/kataloge-broschueren/#duschen

product presentation EVERYSPACE

Pauli + Sohn
seminar dates
pauli.de/en/terminkalender/

available **surface color**



VA
stainless steel



shower system VIVERE II







VIVERE II - balanced: intuitive and technical

MADE IN GERMANY

Excellent design is not only very attractive, it is also extremely functional. VIVERE II is visually harmonious with its round form in contrast to the edges of bath rooms. Technically, the shower system stands out with the eccentric adjustable glass door point fixtures for a perfect fit, the 3D adjustable wall and angle brackets and countersunk holes for a flush surface on the inside of the glass.

- angle and wall connectors adjustable across three axes
- wall connectors available with raised or flush heads
- easy assembly with optimal wall alignment
- pull-away lower guide for easy cleaning
- eccentric guide rollers allow an adjustment in height and inclination
- custom and special solutions on request
- glass thickness: 8 mm

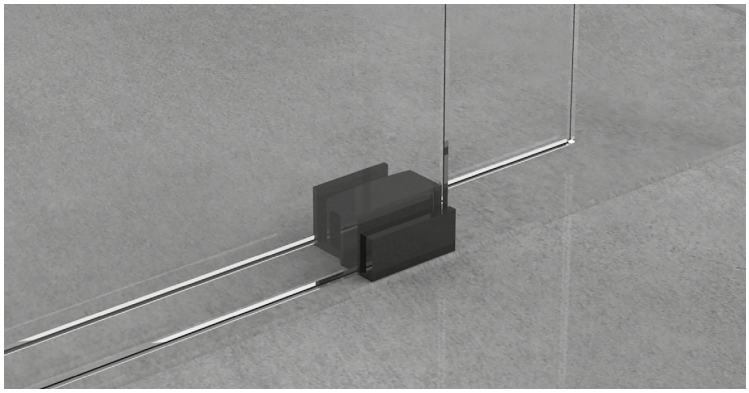

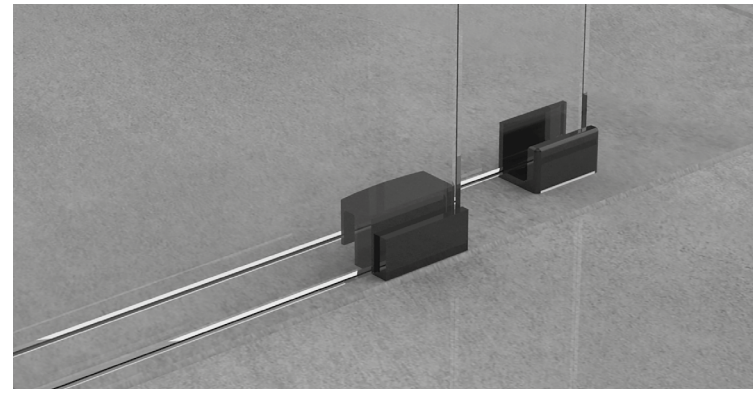

overview
installation situation



niche showers








VIVERE					
8563VA-V (U)	8557VA-V (U)	8549VA-V (U)	8552VA-V (U)	8551VA-V (U)	8553VA-V (U)
8564VA-V (E)	8558VA-V (E)	8549VA-VE (E)	8552VA-VE (E)	8551VA-VE (E)	8553VA-VE (E)
8565VA-V (F)	8559VA-V (F)	8549VA-VF (F)	8552VA-VF (F)	8551VA-VF (F)	8553VA-VF (F)
single rail	double rail	single rail	double rail	single rail	double rail

corner showers





VIVERE		
8560VA-900 (U)	8560VA-1000 (U)	8560VA-V (U)
8561VA-900 (E)	8561VA-1000 (E)	8561VA-V (E)
8562VA-900 (F)	8562VA-1000 (F)	8562VA-V (F)
single rail	single rail	single rail






VIVERE			
–	8555VA-VU (U)	8556VA-VU (U)	8568VA-V (U)
8554VA-V (E)	8555VA-V (E)	8556VA-V (E)	8568VA-VE (E)
8554VA-VF (F)	8555VA-VF (F)	8556VA-VF (F)	8568VA-VF (F)
double rail	double rail	double rail	single rail



circular showers



u-showers




VIVERE		
–	–	–
–	8522VA (E)	8566VA-V (E)
8570VA R500 (F)	–	8567VA-V (F)
single rail	single rail	single rail

(U) = with u-profile
(E) = with wall connector, raised head
(F) = with wall connector, flush

if desired, other variations can be created!

for all available glass-sets, please refer to page 637

single panel niche-situation – width of up to 1200 mm - 8563VA-V | 8564VA-V | 8565VA-V
width of up to 2000 mm - 8557VA-V | 8558VA-V | 8559VA-V

MADE IN GERMANY



picture shows version single guiding rail 8564VA-V



picture shows version double guiding rail 8557VA-V

DM = (LM + (20 mm - sealing profile))/2 - 80 mm
example: DM = (1150 + (20 mm - 10))/2 - 80 mm
DM = 500 mm

we need the following information on the order sheet:
clear dimension (LM), height of the shower (DH) and gap left for a sealing profile between the glass panel and the wall: 10 mm

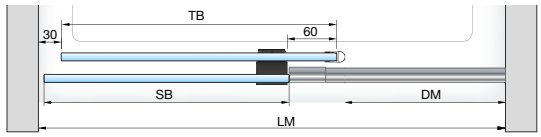

SB = side panel width | TB = door panel width | DM = entry distance | LM = clear distance



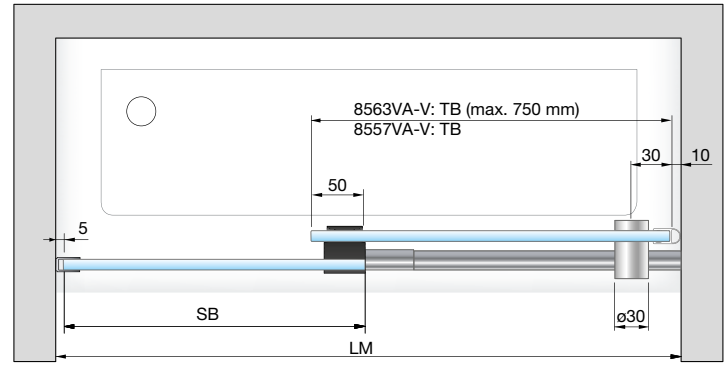

set 8563VA-V: single guiding rail, niche, u-profile, to 1200 mm
set 8557VA-V: double guiding rail, niche, u-profile, to 2000 mm



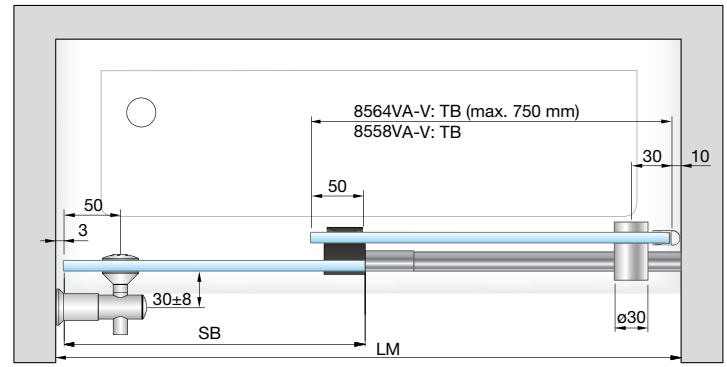

set 8564VA-V: single guiding rail, niche, raised head, to 1200 mm
set 8558VA-V: double guiding rail, niche, raised head, to 2000 mm



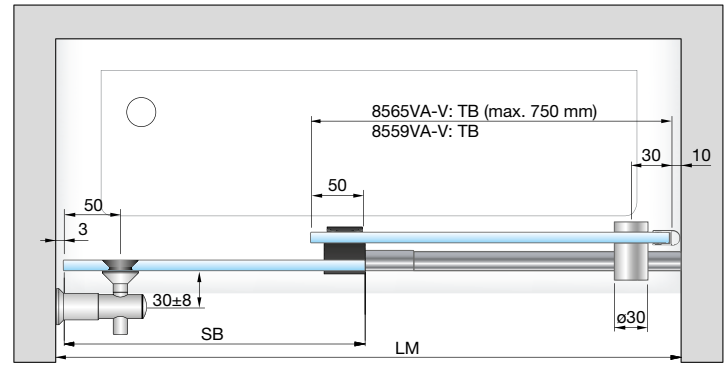

set 8565VA-V: single guiding rail, niche, flush, to 1200 mm
set 8559VA-V: double guiding rail, niche, flush, to 2000 mm

single panel niche-situation – width of up to 2000 mm - 8549VA-V
width of up to 2000 mm - 8552VA-V

MADE IN GERMANY



picture shows version single guiding rail 8549VA-V



picture shows version double guiding rail 8552VA-V

we need the following information on the order sheet:
clear dimension (LM) and height of the shower (DH)



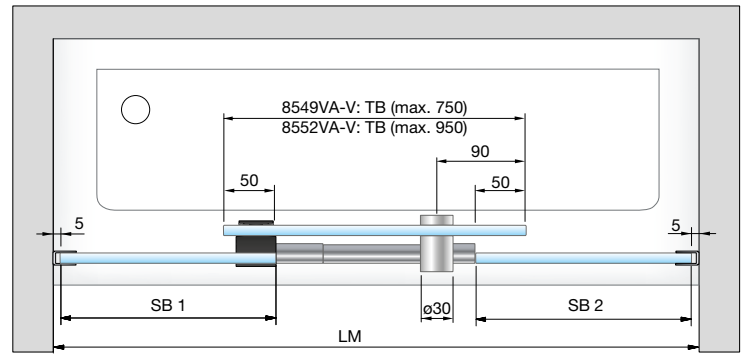

set 8549VA-V: single guiding rail, niche, u-profile, to 1200 mm
set 8552VA-V: double guiding rail, niche, u-profile, to 2000 mm



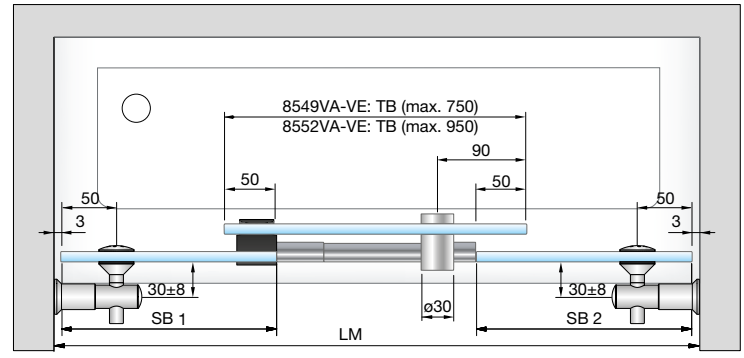

set 8549VA-VE: single guiding rail, niche, raised head, to 2000 mm
set 8552VA-VE: double guiding rail, niche, raised head, to 2000 mm



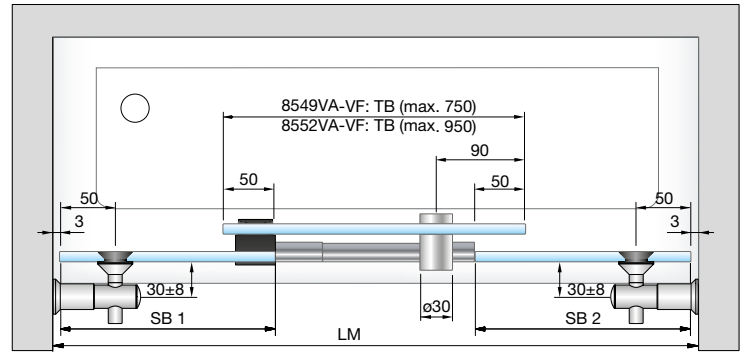

set 8549VA-VF: single guiding rail, niche, flush, to 2000 mm
set 8552VA-VF: double guiding rail, niche, flush, to 2000 mm

SB = side panel width | TB = door panel width | DM = entry distance | LM = clear distance

double panel niche-situation – up to 2000 mm - 8551VA-V
up to 2000 mm - 8553VA-V

MADE IN GERMANY



picture shows version single guiding rail 8551VA-V



picture shows version double guiding rail 8553VA-V

we need the following information on the order sheet:
clear dimension (LM), height of the shower (DH) and gap left for a sealing profile between the glass panel and the wall 20 mm



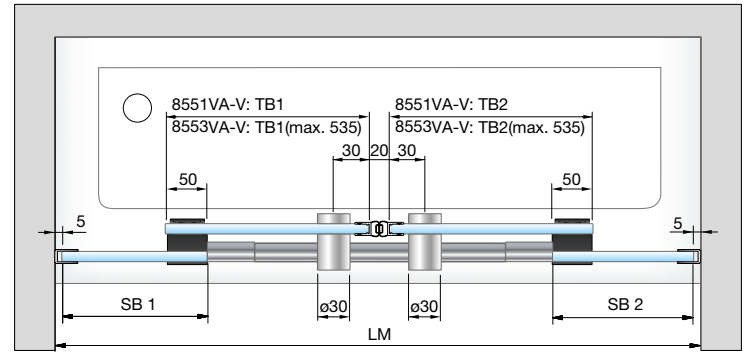

set 8551VA-V: single guiding rail, niche, u-profile, to 1200 mm
set 8553VA-V: double guiding rail, niche, u-profile, to 2000 mm



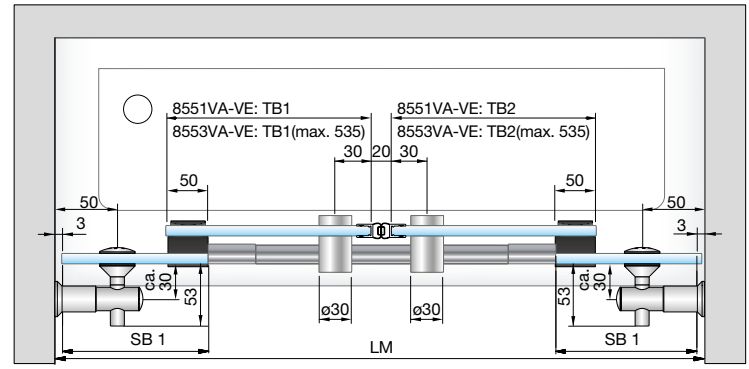

set 8551VA-VE: single guiding rail, niche, raised head, to 2000 mm
set 8553VA-VE: double guiding rail, niche, raised head, to 2000 mm



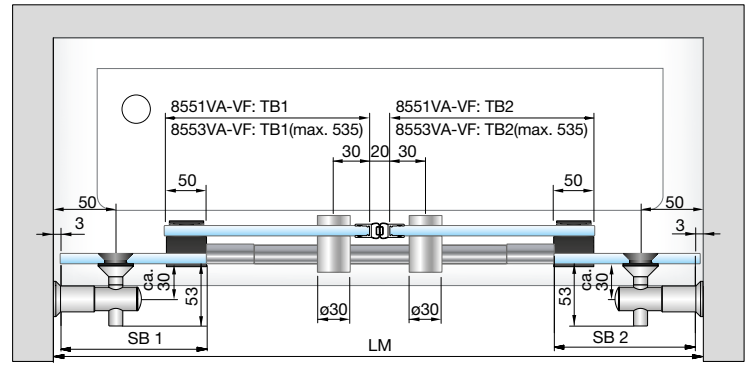

set 8551VA-VF: single guiding rail, niche, flush, to 2000 mm
set 8553VA-VF: double guiding rail, niche, flush, to 2000 mm

SB = side panel width | TB = door panel width | DM = entry distance | LM = clear distance



corner shower width of up to 1000 x 1000 mm

MADE IN GERMANY



picture shows version double guiding rail 8561VA-900

we need the following information on the order sheet:
height of shower (DH), width of the shower tray (DTB), depth of the shower (DTT) and tray offset distance between the outer edge of the side panel and the outer edge of the shower tray (WEM).



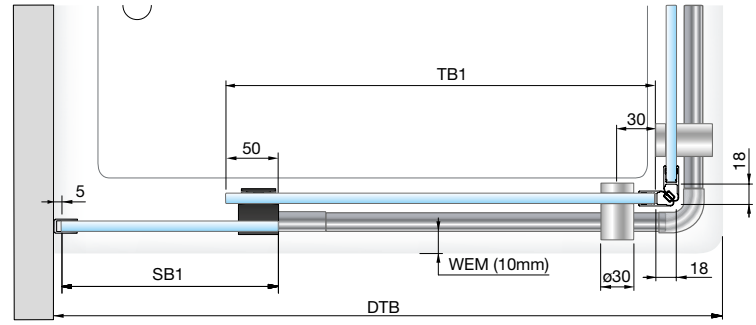

set 8560VA-900: single guiding rail, corner shower, u-profile, shower basin of 900 x 900 mm
set 8560VA-1000: single guiding rail, corner shower, u-profile, shower basin of 1000 x 1000 mm
set 8560VA-V: single guiding rail, corner shower, u-profile, variable size of up to 1000x1000 mm



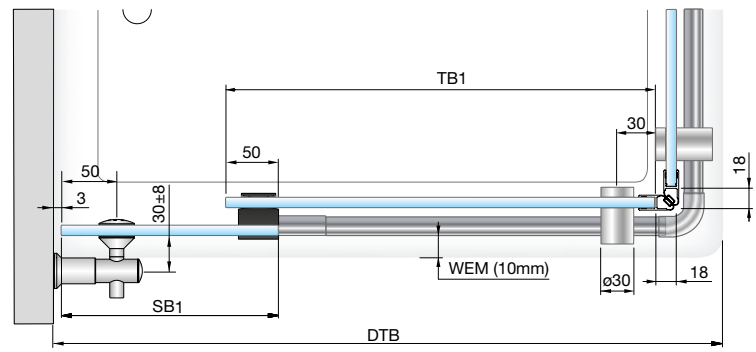

set 8561VA-900: single guiding rail, corner shower, raised head, shower basin of 900 x 900 mm
set 8561VA-1000: single guiding rail, corner shower, raised head, shower basin of 1000 x 1000 mm
set 8561VA-V: single guiding rail, corner shower, raised head, variable size of up to 1000x1000 mm



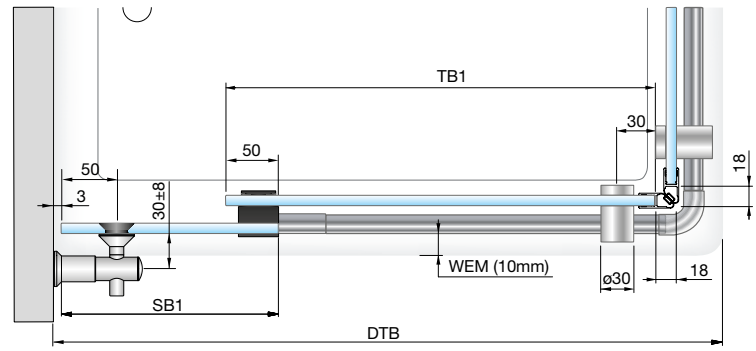

set 8562VA-900: single guiding rail, corner shower, flush, shower basin of 900 x 900 mm
set 8562VA-1000: single guiding rail, corner shower, flush, shower basin of 1000 x 1000 mm
set 8562VA-V: single guiding rail, corner shower, flush, variable size of up to 1000x1000 mm

SB= side panel width | TB = door panel width
DM = entry distance | WEM = distance between the outer edge of the side part and the outer egde of the shower tray | DTB = width of the shower tray | DTT= depth of the shower

U-shower up to 1000x1000 mm - 8566VA-V/8567VA-V

MADE IN GERMANY



picture shows version single guiding rail 8566VA-V

we need the following information on the order sheet:
height of shower (DH), width of the shower tray (DTB), depth of the shower (DTT) and tray offset distance between the outer edge of the side panel and the outer edge of the shower tray (WEM).



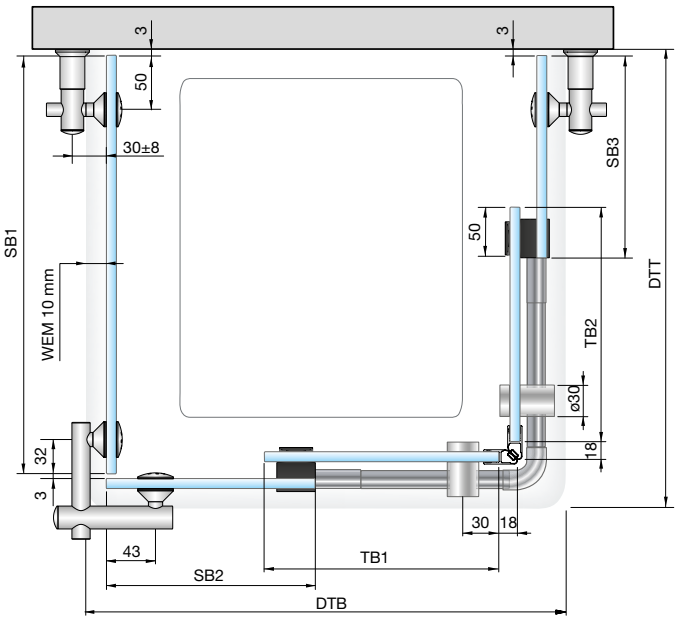

set 8566VA-V: single guiding rail, U shower, raised head



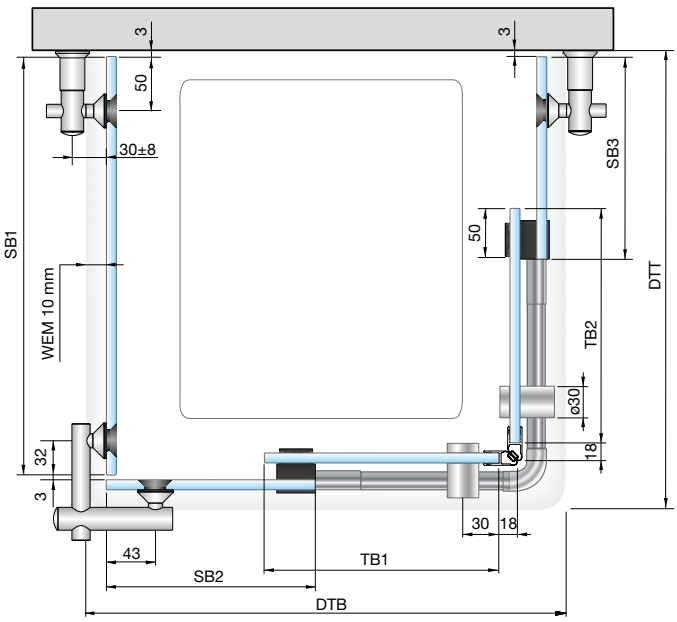

set 8567VA-V: single guiding rail, U shower, flush

SB= side panel width | TB = door panel width
DM = entry distance | WEM = distance between the outer edge of the side part and the outer egde of the shower tray | DTB = width of the shower tray | DTT = depth of the shower

corner shower width of up to 1000 x 1000 mm

MADE IN GERMANY





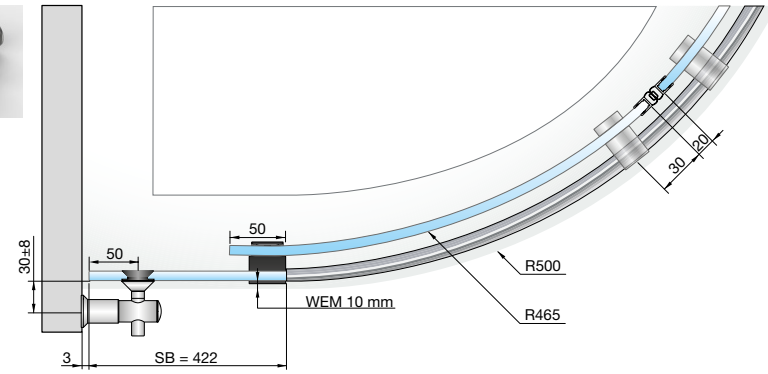

set 8570VA: single guiding rail, circular shower, flush, shower basin of 900 x 900 mm, R500

picture shows version single guiding rail 8570VA-V

for all available glass-sets, please refer to page 637

art. no. 8581GLAS-R500-900



SB= side panel width
TB = door panel width
DM = entry distance
WEM = distance between the outer edge of the side part and the outer egde of the shower tray
DTB = width of the shower tray
DTT = depth of the shower



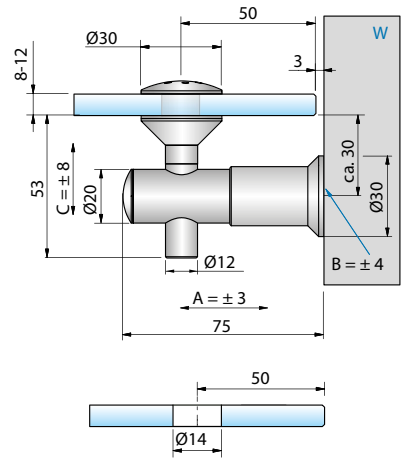

adjustability:
A: ± 3 mm | B: ± 4 mm | C: ± 8 mm
B=adjustability by oblong hole

article no.	finish	glass thickness	article description	features	pu/pieces
7772VA	stainless steel	8-12 mm	wall connector VIVERE, raised head, glass-wall, 90°	fastener adjustable in 3 axes	1/2



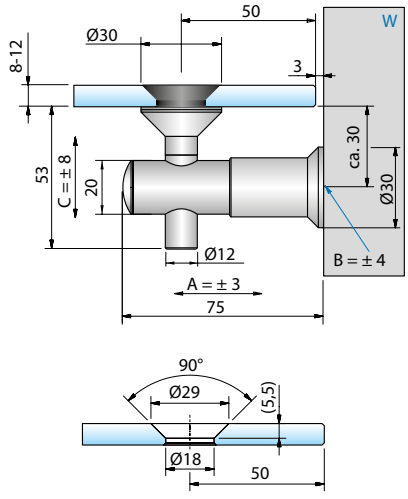

adjustability:
A: ± 3 mm | B: ± 4 mm | C: ± 8 mm
B=adjustability by oblong hole

article no.	finish	glass thickness	article description	features	pu/pieces
7773VA	stainless steel	8-12 mm	wall connector VIVERE, flush, glass-wall, 90°	fastener adjustable in 3 axes	1/2



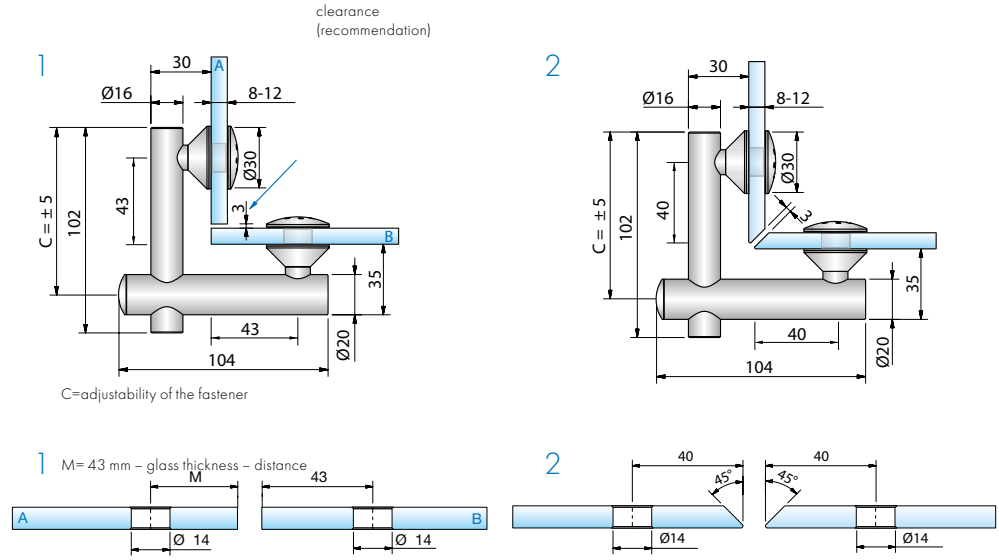

article no.	finish	glass thickness	article description	features	pu/pieces
7774VA	stainless steel	8-12 mm	wall connector VIVERE, raised head, glass-glass, 90°	-	1/2



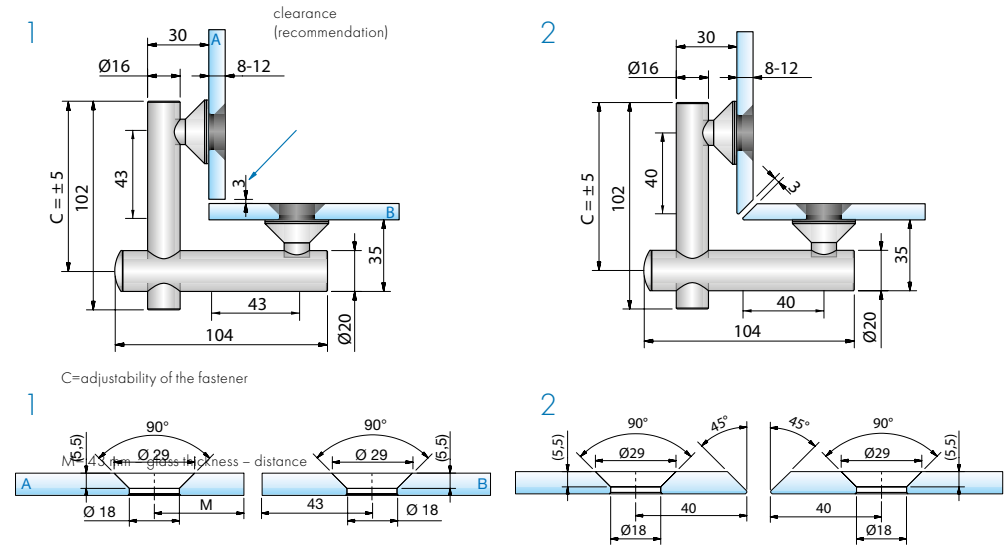

article no.	finish	glass thickness	article description	features	pu/pieces
7775VA	stainless steel	8-12 mm	wall connector VIVERE, flush, glass-glass, 90°	-	1/2

STH = height of side panel | TH = height of the door | DH = height of shower

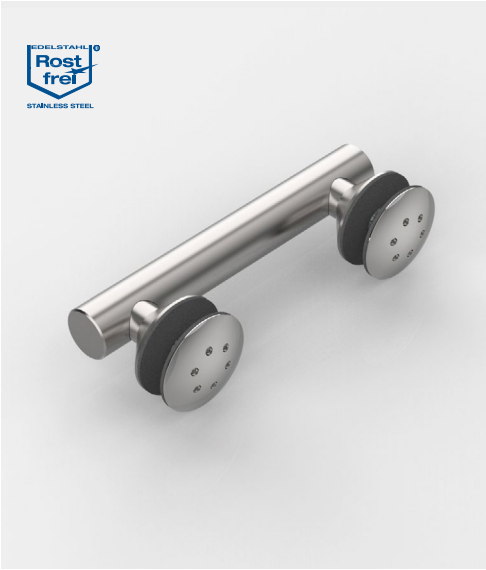

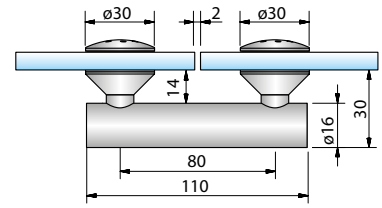

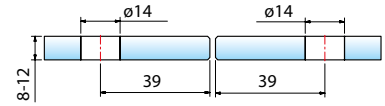

article no.	finish	glass thickness	article description	features	pu/pieces
7777VA	stainless steel	8-12 mm	wall connector VIVERE, raised head, glass-glass, 180°	-	1/2



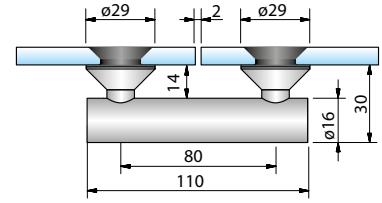

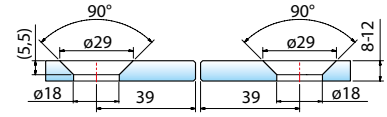

article no.	finish	glass thickness	article description	features	pu/pieces
7775VA	stainless steel	8-12 mm	wall connector VIVERE, flush, glass-glass 180°	2 mm adjustable over 360°	1/2

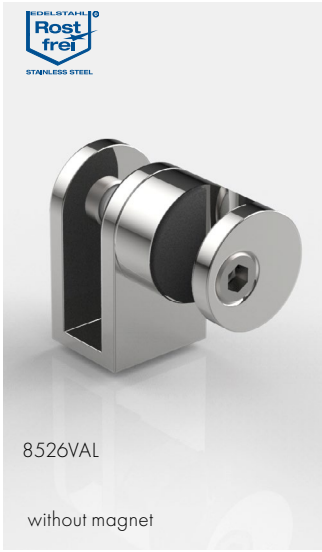

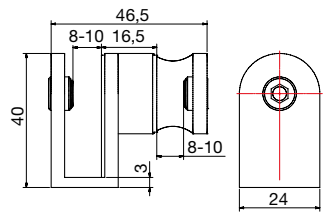



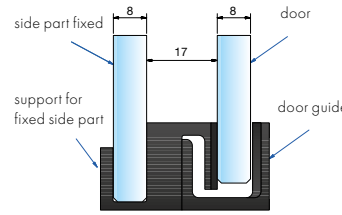

pull-away with magnet

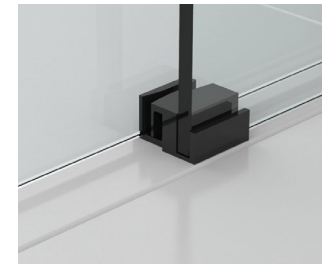

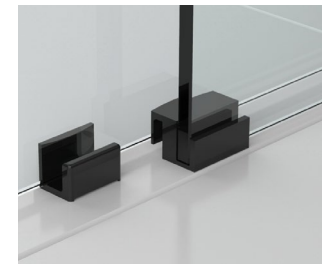

article no.	finish	glass thickn.	article description	pu/pieces
8526VAL	stainless steel	8-10 mm	floor guide, left	1/1
8526VAR	stainless steel	8-10 mm	floor guide, right	

article no.	finish	glass thickn.	article description	pu/pieces
8527KU	plastic black	8 mm	floor guide	1/1
8527KU1	plastic white	8 mm	floor guide	





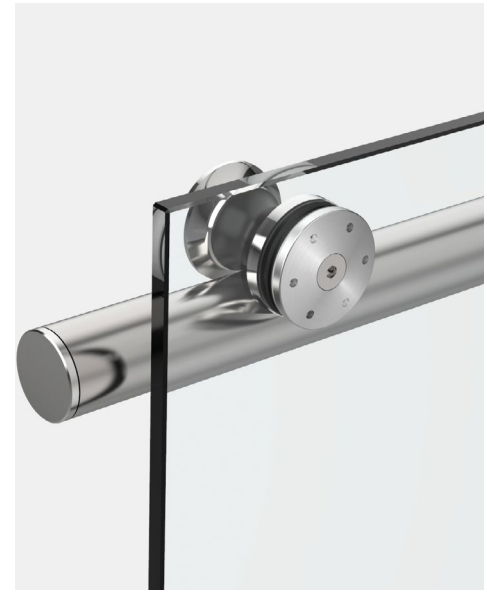

article no.	finish	glass thickn.	article description	pu/pieces
8505VA	stainless steel	≤ 8 mm	u-profile, length =1980 mm	1/1
8505VA-2500	stainless steel	≤ 8 mm	u-profile, length =2500 mm	

article no.	finish	article description	pu/pieces
8546VA4	stainless steel	end plug Ø 30mm	1/1
8548VA	stainless steel	eccentric roller ± 2mm	



with hanger bolt for
ceiling mounting,
length up to 1000 mm

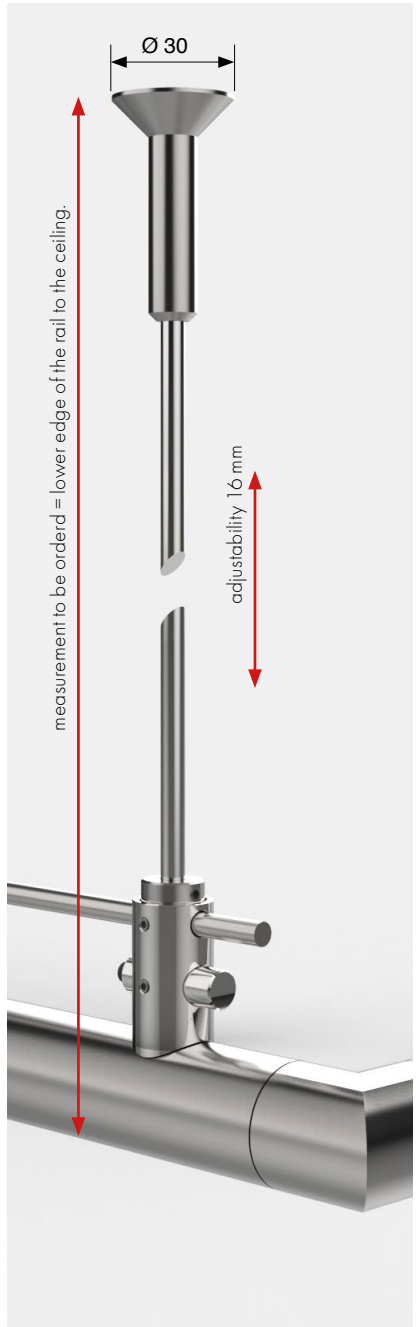



with mounting plate Ø 60 mm,
3 mounting holes for
ceiling mounting,
length up to 1000 mm

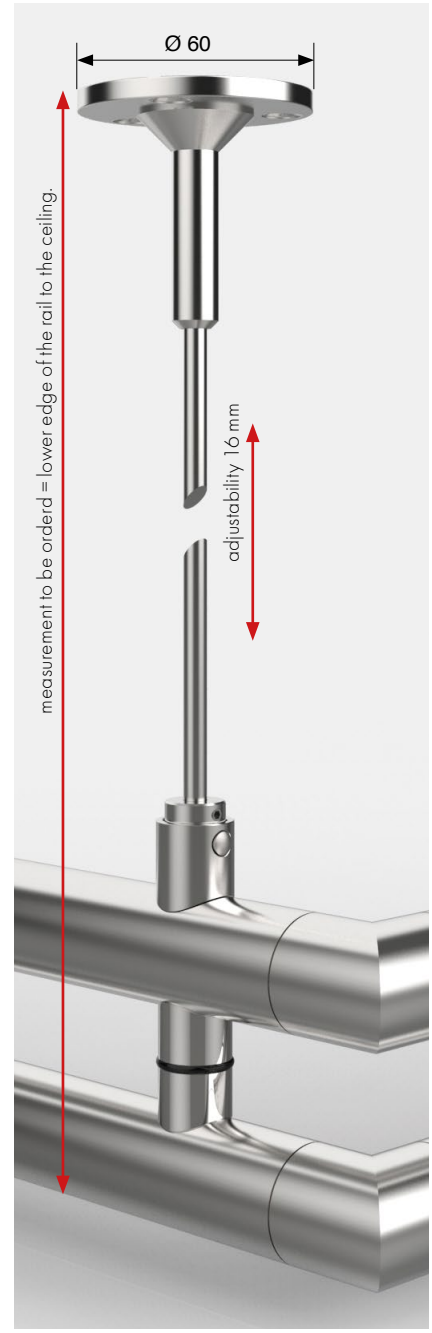

article no.	finish	article description	pu/pieces
8544VA	stainless steel	ceilling hanger for single guiding rail	1/1
8518VA	stainless steel	ceilling hanger for double guiding rail	

article no.	finish	article description	pu/pieces
8545VA	stainless steel	ceilling hanger for single guiding rail	1/1
8519VA	stainless steel	ceilling hanger for double guiding rail	

different glass and wall connections

MADE IN GERMANY

Different installation situations require different connections. The wall connector pin (standard 8517VA) offers a latent solution. In case of facing difficult subsurfaces, you are able to fix the guiding rail with the wall connection plate (31177VA) by using two screws /dowels.

For parallel mounting, the side connector (8547VA) can be used. our round showers can be fixed by using the special connector (8576VAR/VAL). The ceiling hanger (8544VA/8545VA) offers an additional locking device.

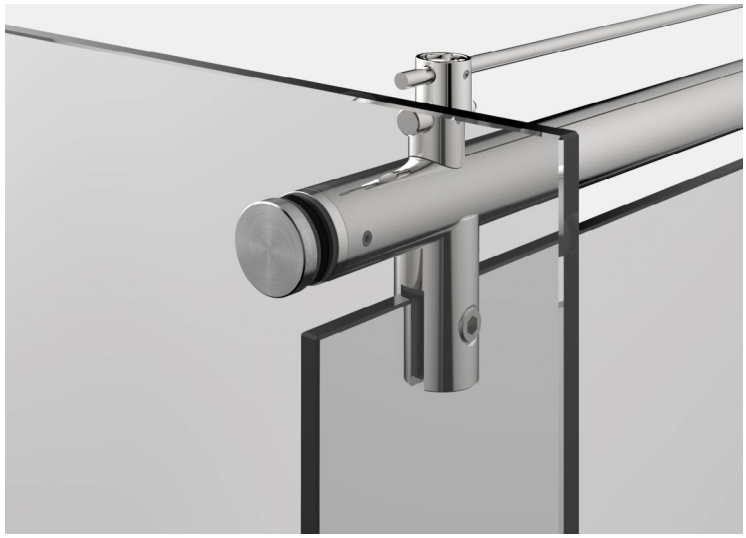

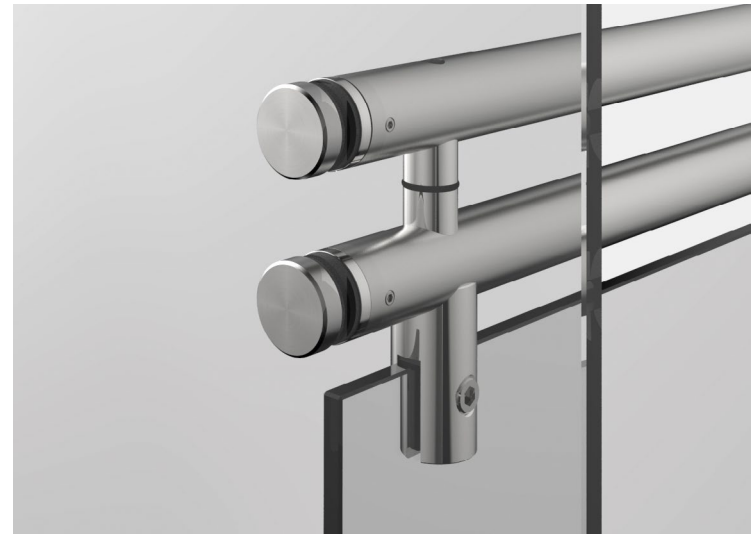



It is also possible to connect to the glass with single and double track tubes. Contact us - we will be happy to advise you!

different glass and wall connections

MADE IN GERMANY

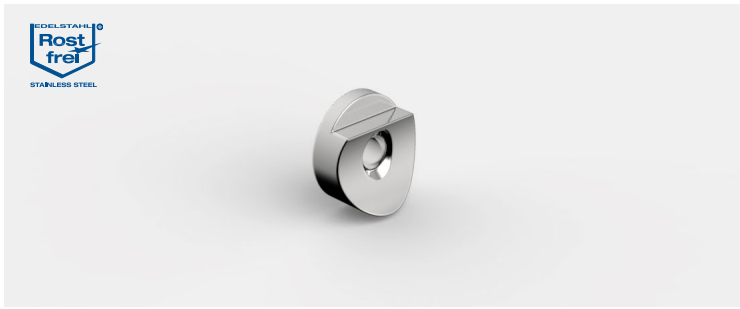

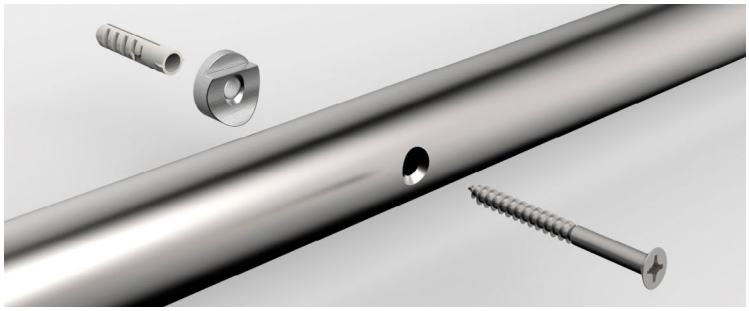

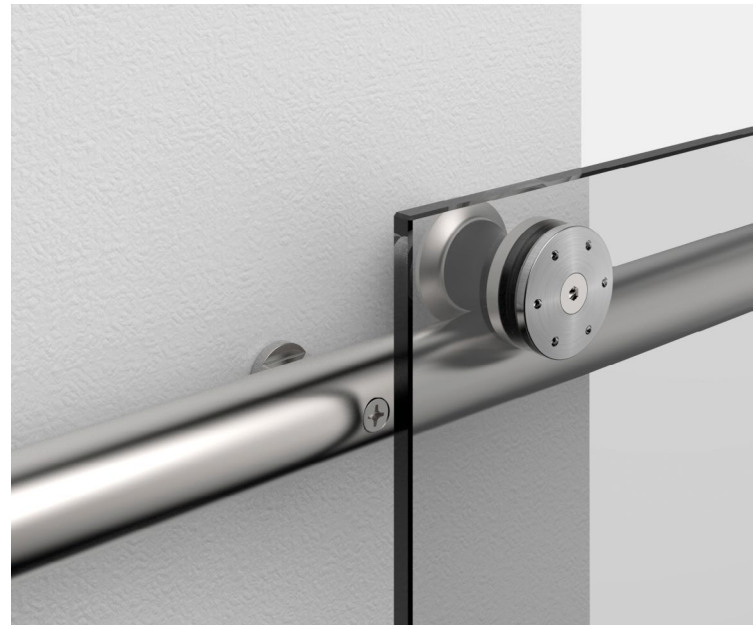

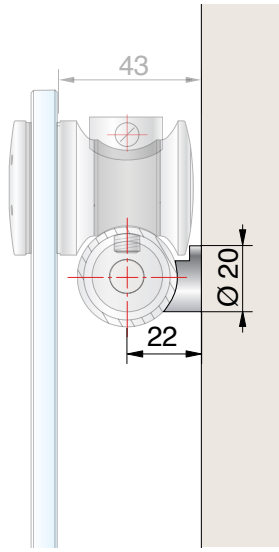

wall connector Ø 20 mm	
article no.	
8547VA	
finish	
VA	stainless steel

different glass and wall connections

MADE IN GERMANY



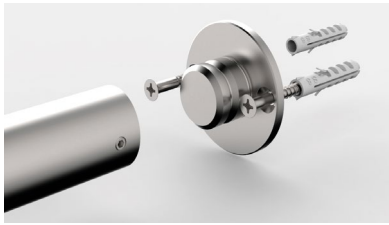

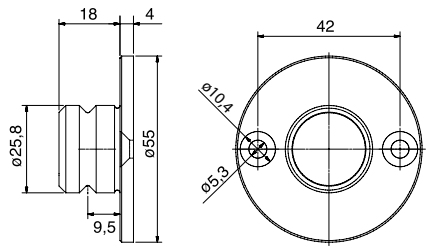



article no.	finish	article description	Ø	pu/pieces
31177VA	stainless steel	wall mount plate with pin	Ø 55 mm	1/1



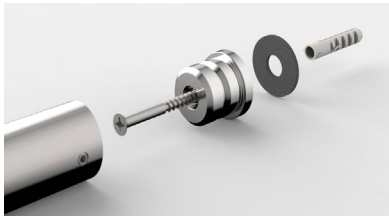

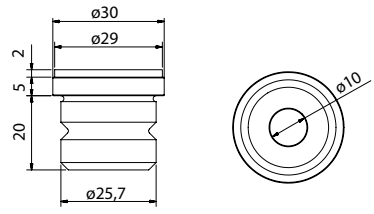



article no.	finish	article description	Ø	pu/pieces
8517VA	stainless steel	wall stud for VIVERE II tube	30 mm	1/1

different glass and wall connections

MADE IN GERMANY







article no.	finish	article description	features	pu/pieces
8576VAL 8576VAR	stainless steel	wall connection with wall connection plate 8545-1VA for round showers	right and left version excl. screw S7991A2D8x16	1/1



handles

MADE IN GERMANY





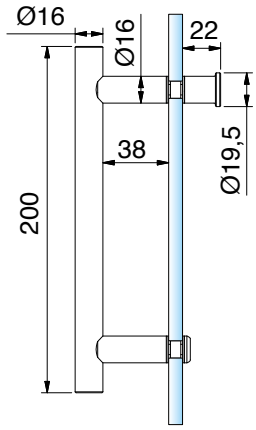

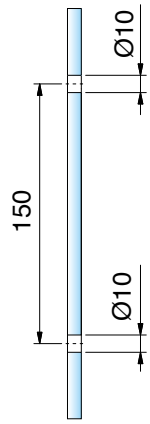

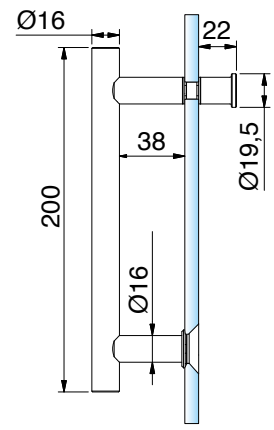

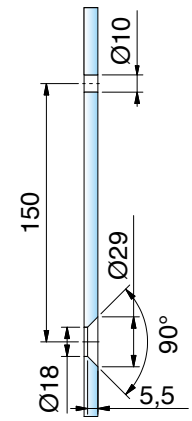

door handle single sided raised head, with handle piece		1/1
article no	glass thickness	
8065__-200	6 - 10 mm	

finish		
	VA	stainless steel
	VA1	stainless steel polished

door handle single sided flush, with handle piece		1/1
article no	glass thickness	
8066__-200	6 - 10 mm	

finish		
	VA	stainless steel
	VA1	stainless steel polished

handles

MADE IN GERMANY

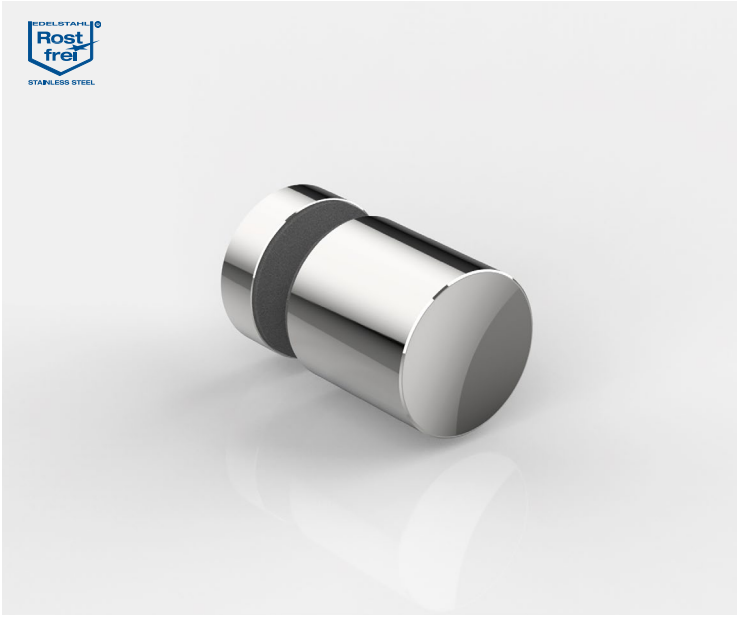

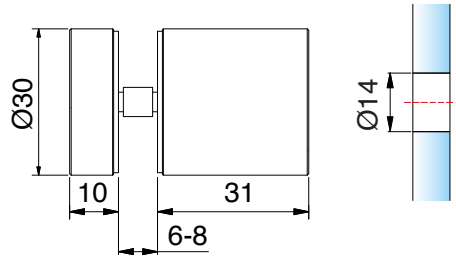

glass door knob single sided



article no	glass thickness
8502VA	6-8 mm

finish

VA	stainless steel

handles

MADE IN GERMANY



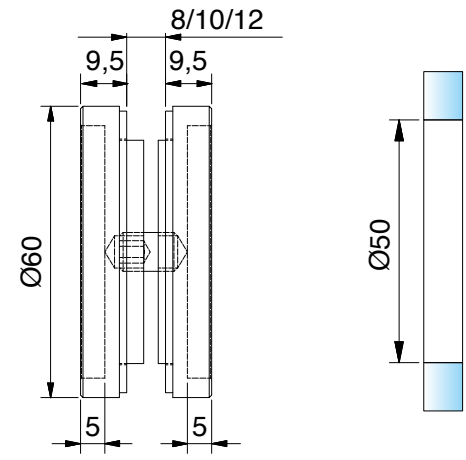

recess knob closed, Ø 60 mm, raised 9,5 mm

article no.	glass thickness
8514__	8 - 12 mm

1/1

finish		
	MS7	gloss chrome
	VA	stainless steel
	VA135	Deep black matt

handles

MADE IN GERMANY

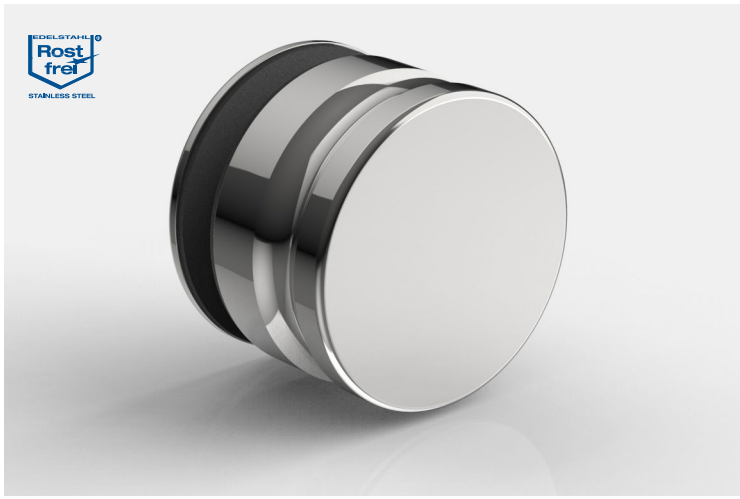

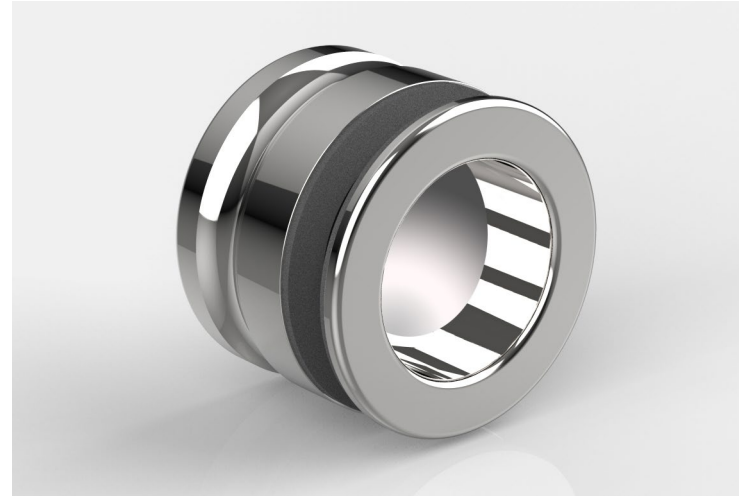

inner side with recess

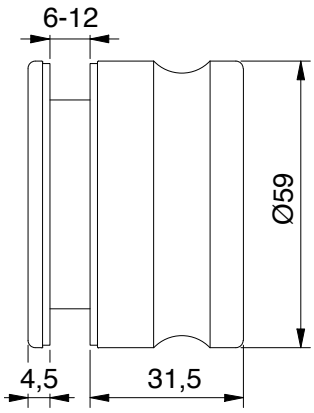

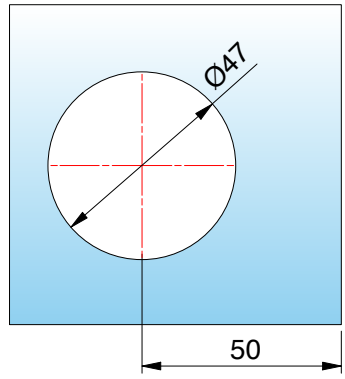

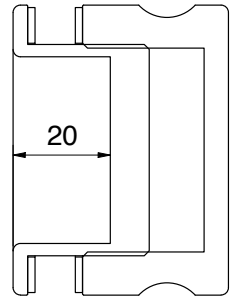

knob double-sided, threaded	
article no.	glass thickness
8822VA-MGE	6 - 12 mm
finish	
VA stainless steel	

planning notes

MADE IN GERMANY



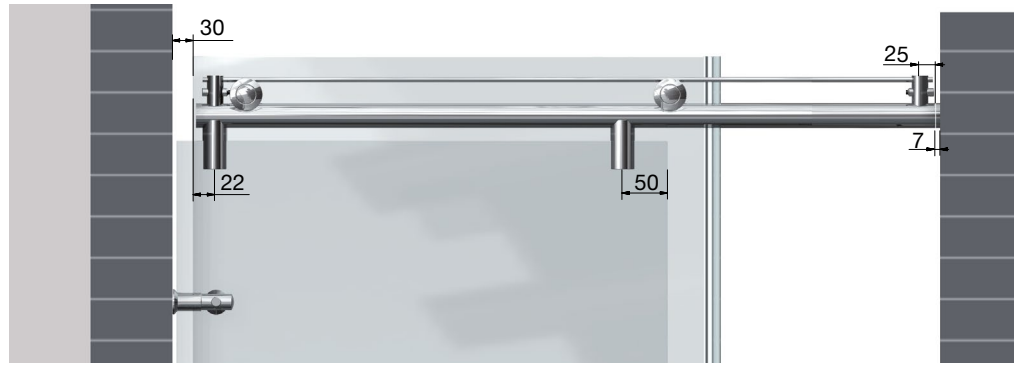

sample niche shower with single guiding rail:
for niche widths of up to 1200mm
You can use our shower 8563VA-V, 8564VA-V and 8565VA-V for niche widths of up to 1200-2000mm.
We recommend to use our shower 8557VA-V, 8558VA-V and 8559VA-V with double rail.

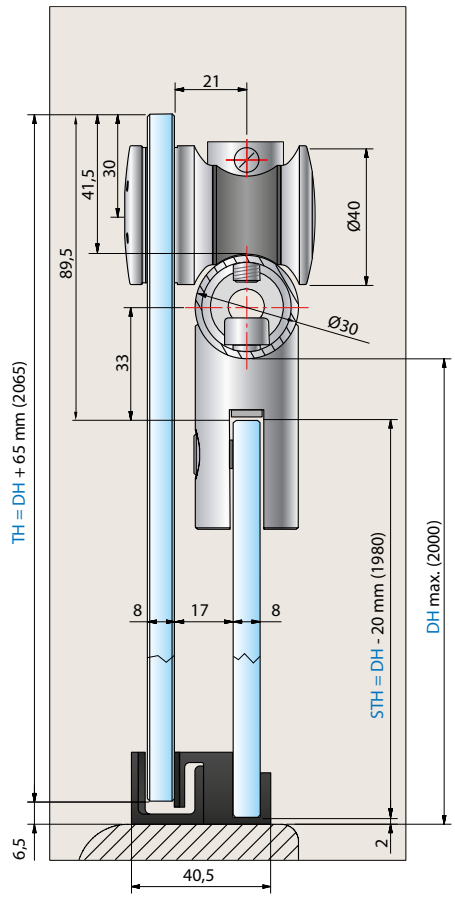

STH = height of side panel

TH = height of the door

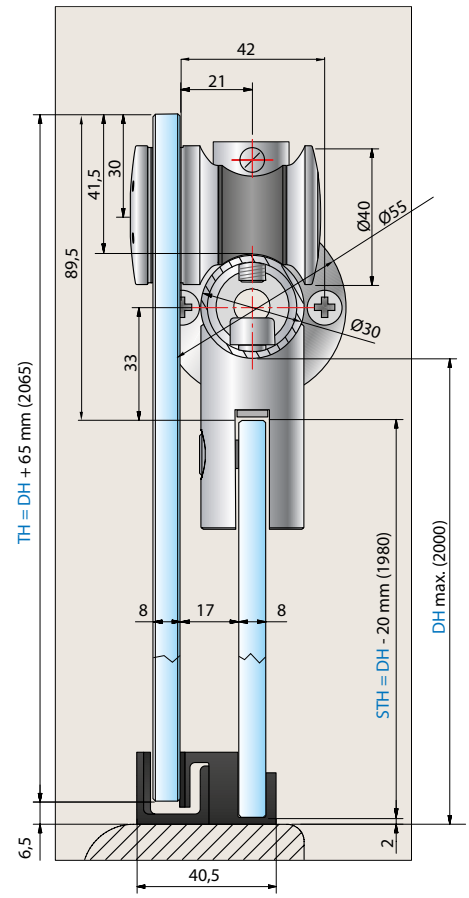

DH = height of shower

planning notes

MADE IN GERMANY





sample niche shower with double guiding rail:
shower cabinet solutions are alternatively available with wall stud (8517VA) or wall connector plate (31177- VA). (Standard: wall stud 8517VA)
For niche sizes between 1200mm and 2000mm we recommend to use our systems 8557VA-V, 8558VA-V and 8559VA-V with double rail.

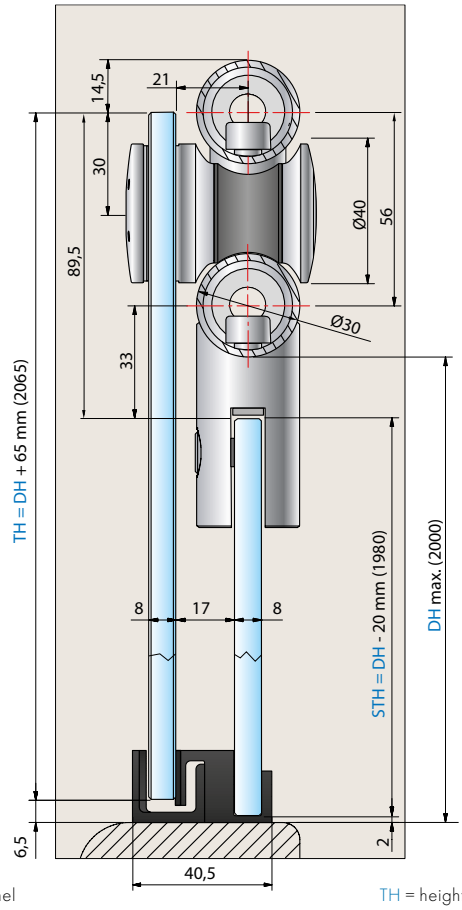

STH = height of side panel

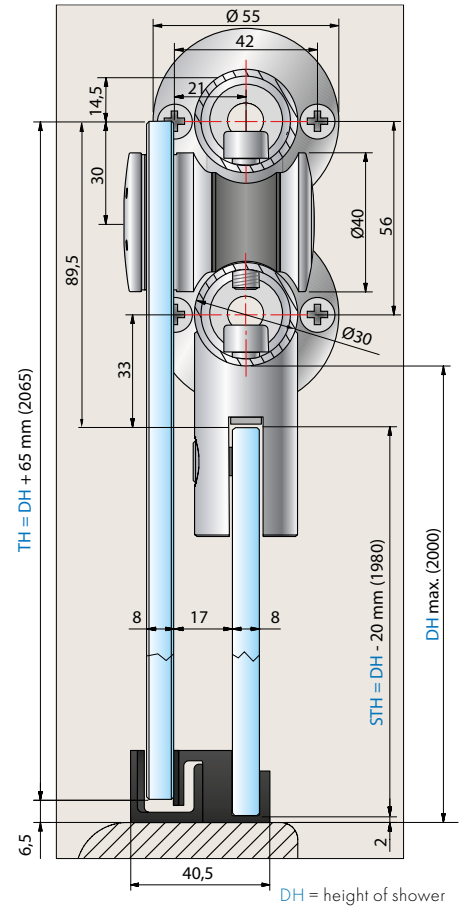

TH = height of the door

DH = height of shower

VIVERE



PROFILE

U profiles

wall profiles in overview

various solutions for diverse requirements

Each of our wall profiles is designed for different requirements. We will be glad to advise you!



■ **wall connection profile 8830**

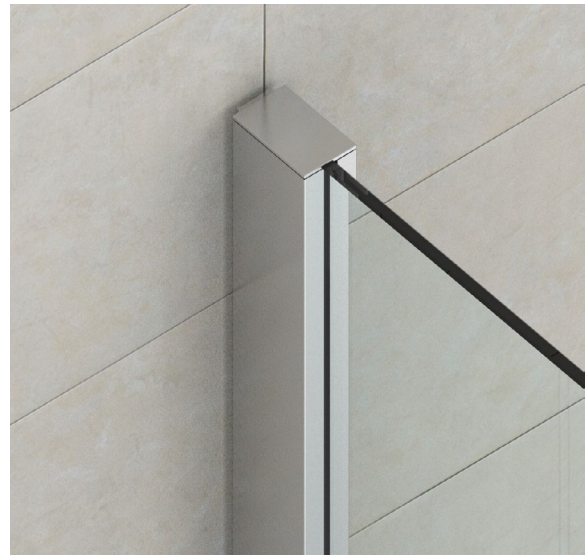

■ **clamping profile 8884** for uneven walls and stable support

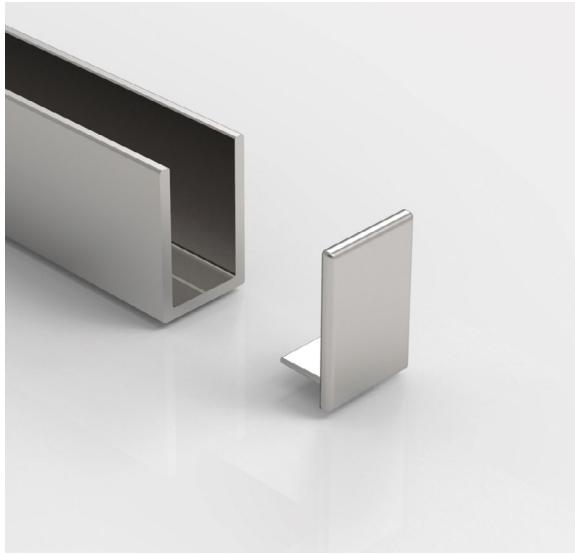

■ e.g. **8841 with end cap**
different damp room suitable U-profiles in different sizes.

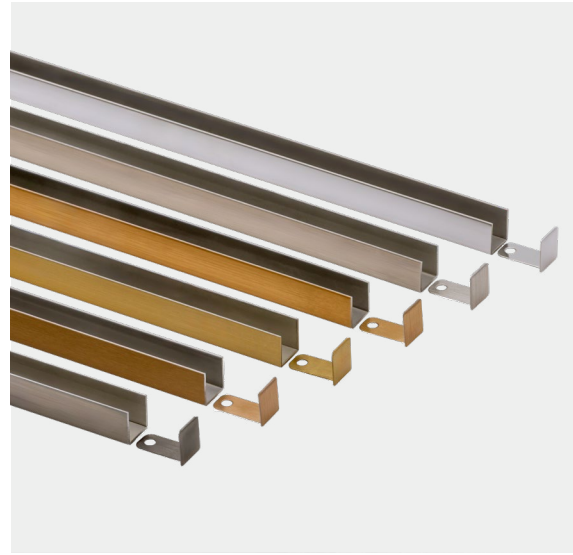

■ z. B. **8512 mit with end cap**
damp room suitable stainless steel U-profiles with matching end caps in the latest trendy colors.



Profile for dry glazing

easy mounting - quickly installed

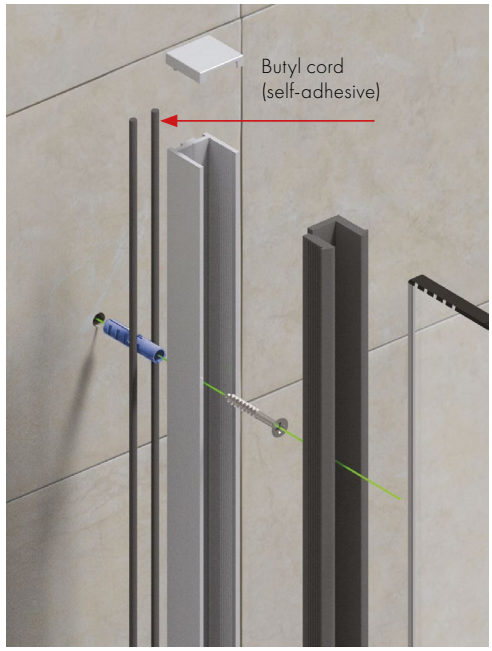



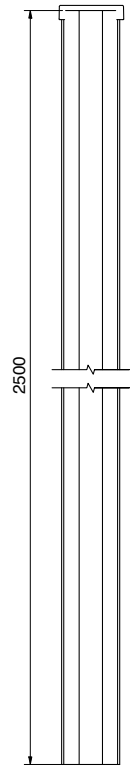

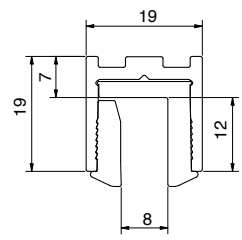

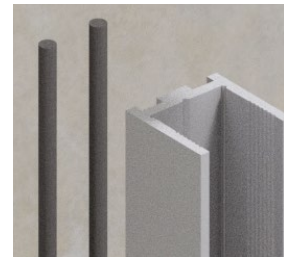

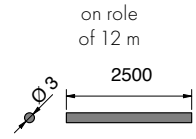

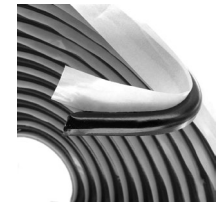

8830-2Butyl-12M - optionally available
butyl cord Ø 3 mm, length 12 m, self-adhesive
as a seal to the wall without subsequent silicone seam

U-Profil, 1 slot 15 x 15 mm, length 2500 mm



maximum height 2500 mm can be shortened as desired

article no.	glass thickness
8830___-2500	8 mm with glazing profiles or silicone seam
	10 mm with silicone seam
	12 mm with silicone seam

finish		
	E6EV5	aluminium gloss anodized
	E3/50	gloss chrome
	E123	stainless steel optic
	E6C35	black anodized



profile with end cap

easy mounting - quickly installed

suitable for wet areas



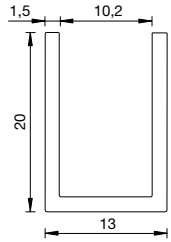

*Attention: For profiles with the surface E3/50 the cut edges must be sealed very well in wet areas!
Contacting (anodizing & coating): Due to the process technology, the profile ends (20-50mm) may have contact marks due to the necessary contacting. When ordering fixed lengths (5m), this must be taken into account.

U-Profil

Material	plate thickness
Aluminium	6-10 mm

	article no.	finish	length
	8841E6EV5-2010	polished and anodized	20x13x2010x1,5 mm
	8841E6EV5-2500	polished and anodized	20x13x2500x1,5 mm
	8841E3/50-2500	gloss chrome*	
	8841E6C35-2500	black anodized	
	8841E6EV1-2500	natural-colored anodized	
	8841E3EV3-2500	gold anodized	
	8841E123-2500	anodized stainless steel optic	

	article no.	finish	length
	8841E6EV1-5M	gloss chrome	20x13x5000x1,5 mm
	8841E123-5M	anodized stainless steel optic	
	8841E3/50-5M	gloss chrome*	
	8841E6C35-5M	black anodized	
	8841E3EV3-5M	gold anodized	



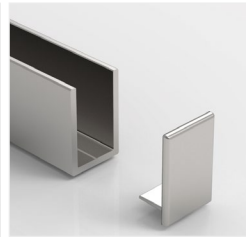

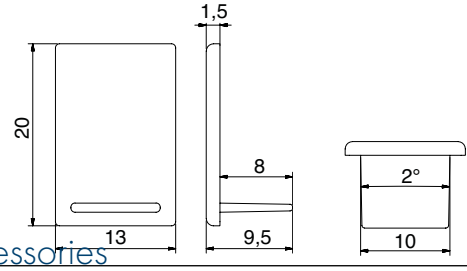

end cap for profile 8841, closed

	article no.	finish
	8841-2KU6U7	natural-colored anodized (gloss chrome)
	8841-2KU12	gold matt anodized
	8841-2KU3	black anodized

accessories

article no.	article description
7269KL-9-5M	double-sided adhesive tape, transparent, thickness 2 mm
7269KL-11-5M	
7269KL-15-5M	
7269KL-19-5M	
7269KL-23-5M	

Important note:
Only as sealing or assembly aid. Despite the high adhesive strength, these do not replace mechanical fastening (screws).

Profile with end cap

MADE IN GERMANY



Profile with end cap

MADE IN GERMANY

suitable for wet areas

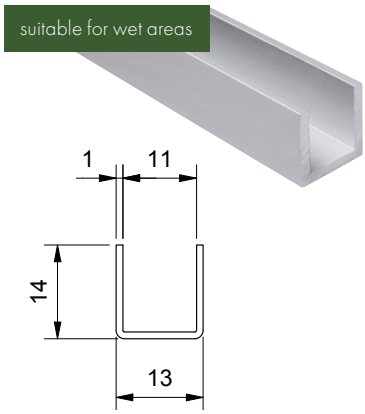

u-profil

plate thickness 6-10 mm



article no.	material	finish	length
8512VA1-2500	stainless steel	polished	14x13x1 mm
8512VA2-2500	stainless steel	matt brushed	
8512VAPVD39-2500	aluminium	gold bronze brushed	
8512VAPVD40-2500	aluminium	gold optic brushed	
8512VAPVD41-2500	aluminium	copper optic brushed	
8512VAPVD42-2500	aluminium	graphite metal optic brushed	

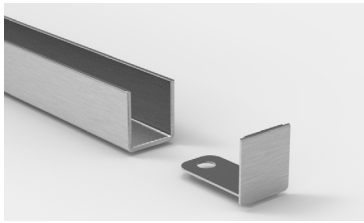

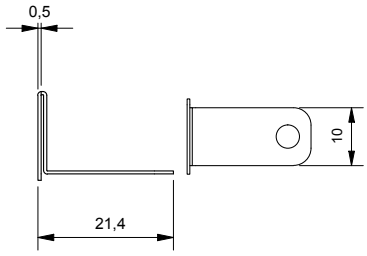

end cap for profile 8512, closed



article no.	material	finish
8512VA1-2500-E	stainless steel	polished
8512VA2-2500-E	stainless steel	matt brushed
8512VAPVD39-2500-E	aluminium	gold bronze brushed
8512VAPVD40-2500-E	aluminium	gold optic brushed
8512VAPVD41-2500-E	aluminium	copper optic brushed
8512VAPVD42-2500-E	aluminium	graphite metal optic brushed

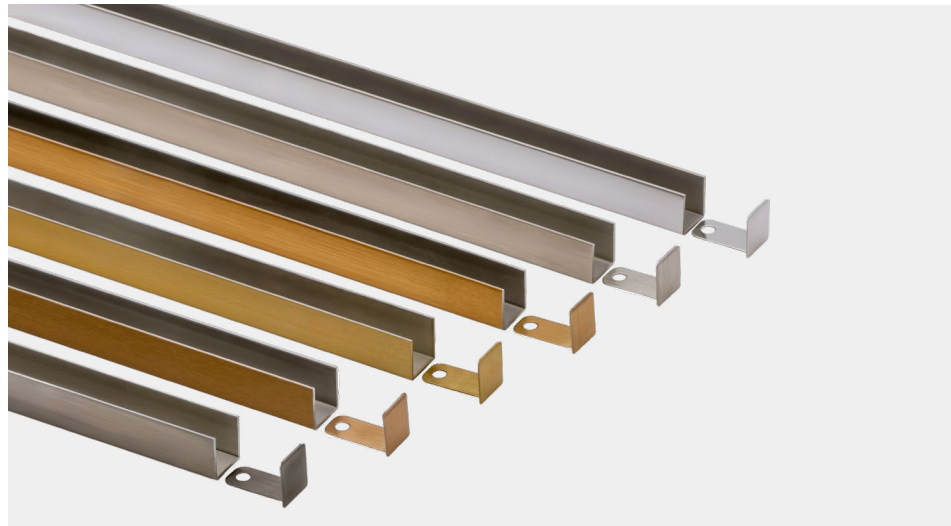

Profile with end cap

MADE IN GERMANY



MADE IN GERMANY

suitable for wet areas

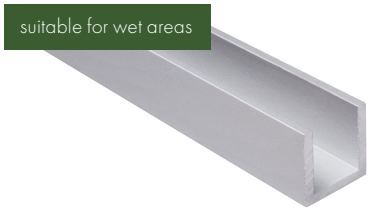

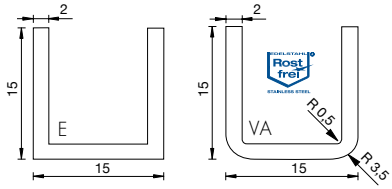

u-profil — plate thickness ≤ 10 mm

	article no.	material	finish	length
	5015VA1-2500	stainless steel	polished	15x15x2500x2 mm
	5015VA2-2500	stainless steel	matt brushed	
	5015E6EV5-2.5M	aluminium	polished and anodized	
	5015E6C35-2.5M	aluminium	black anodized	
	5015E3/50-2.5M	aluminium	gloss chrome*	
	5015VA1-5M	stainless steel	polished	15x15x5000x2 mm
	5015VA2-5M	stainless steel	matt brushed	
	5015E6EV1-5M	aluminium	natural-colored anodized	
	5015E1/22-5M	aluminium	polished silver-colored anodized	
	5015E1/23-5M	aluminium	anodized stainless steel optic	
	5015E3/50-5M	aluminium	gloss chrome*	
	5015E0/14-5M	aluminium	powder-coated RAL9016	
	5015E6C35-5M	aluminium	black anodized	

suitable for wet areas

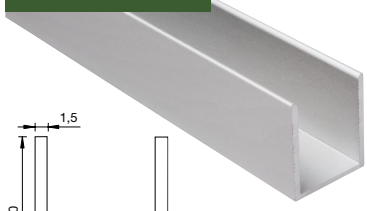

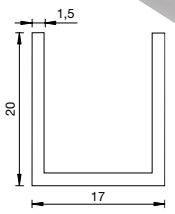

u-profil — plate thickness ≤ 14 mm

	article no.	material	finish	length
	5017E6EV1-5M	aluminium	natural-colored anodized	20x17x5000x1,5 mm
	5017E6EV5-5M	aluminium	polished and anodized	
	5017E3/50-5M	aluminium	gloss chrome*	
	5017E0/14-5M	aluminium	powder-coated RAL9016	
	5017E1/23-5M	aluminium	anodized stainless steel optic	

suitable for wet areas



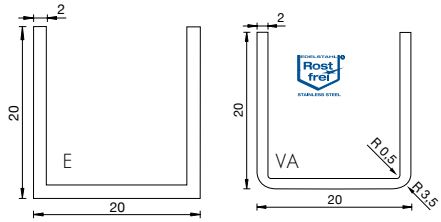

u-profil — plate thickness ≤ 10 mm

	article no.	material	finish	length
	5020VA1-2500	stainless steel	polished	20x20x2500x2 mm
	5020VA2-2500	stainless steel	matt brushed	
	5020VA1-5M	stainless steel	polished	20x20x5000x2 mm
	5020VA2-5M	stainless steel	matt brushed	
	5020E6EV1-5M	aluminium	natural-colored anodized	
	5020E1/23-5M	aluminium	anodized stainless steel optic	
	5020E3/50-5M	aluminium	gloss chrome*	
	5020E0/14-5M	aluminium	powder-coated RAL9016	
	5020E6C35-5M	aluminium	black anodized	

*Attention: For profiles with the surface E3/50 the cut edges must be sealed very well in wet areas!
Contacting (anodizing & coating): Due to the process technology, the profile ends (20-50mm) may have contact marks due to the necessary contacting.
When ordering fixed lengths (5m), this must be taken into account.

clamping profiles

MADE IN GERMANY



single clamping jaws moveable along the entire profile length
2010 mm = 5 clamping jaws, 2500 mm = 6 clamping jaws

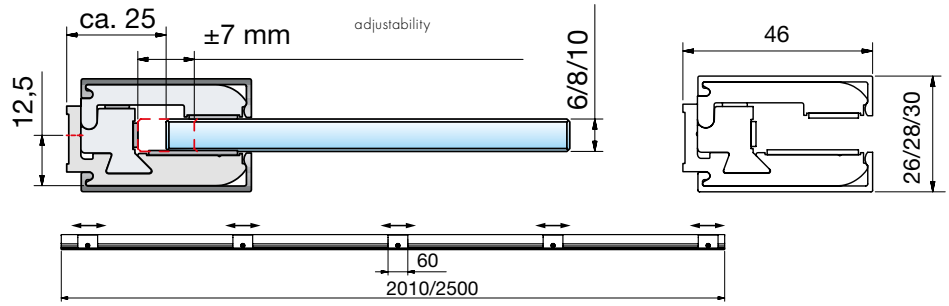

endcaps are not included in set!

clamp profile			glass thickness	
			6/8/10 mm	
	article no.	material	finish	length
	8884E1/23-2010-8	aluminium	anodised nickel silver (stainless steel optic)	2010 mm
	8884E1/23-2500-8	aluminium		2500 mm
	8884E6EV1-2010-8	aluminium	special etched anodised natural color	2010 mm
	8884E6EV1-2500-8	aluminium		2500 mm
	8884E6EV1-5000-8	aluminium		5000 mm
	8884E6EV5-2010-8	aluminium	special etched anodised gloss chrome	2010 mm
	8884E6EV5-2500-8	aluminium		2500 mm

Please order the following sets for free:
for 6 mm glass thickness
8884-10ZN0-5-6 for 2010 mm/ 8884-10ZN0-6-6 for 2500mm/ 8884-10ZN0-6-6 for 5000 mm - 2x per profile
for 10 mm glass thickness
8884-10ZN0-5-10 for 2010 mm/ 8884-10ZN0-6-10 for 2500 mm/ 8884-10ZN0-6-10 for 5000 mm - 2x per profile

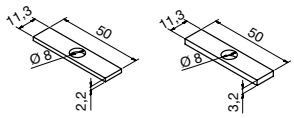

article no.	material	article description
8885HZ	Hartzell	intermediate shims for 8884

intermediate shims for 8884 to remove any unevenness in the wall, 5 pieces per thickness are supplied with the set. unevenness can be removed from 2 mm in 1-mm stages through combining and/or doubling.

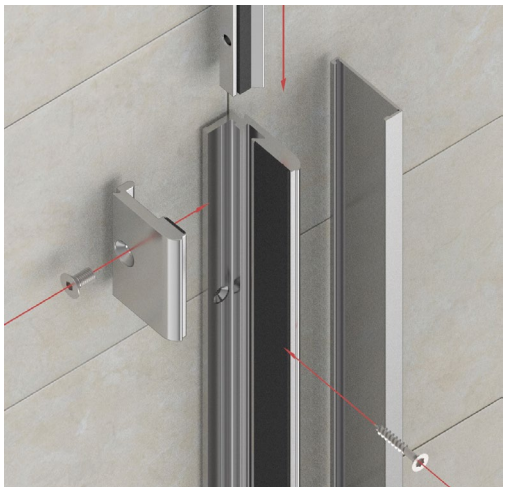





clamping profiles

MADE IN GERMANY

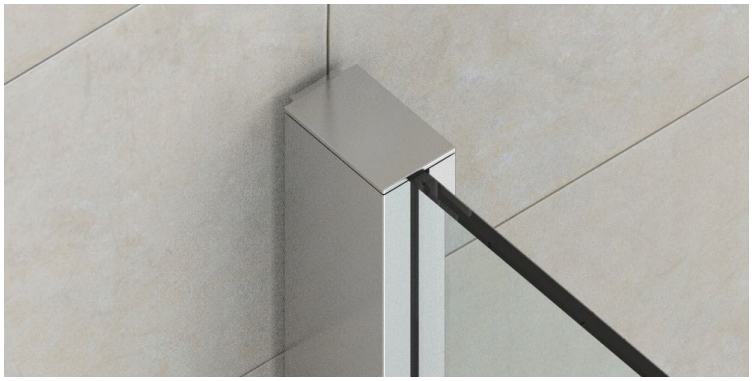

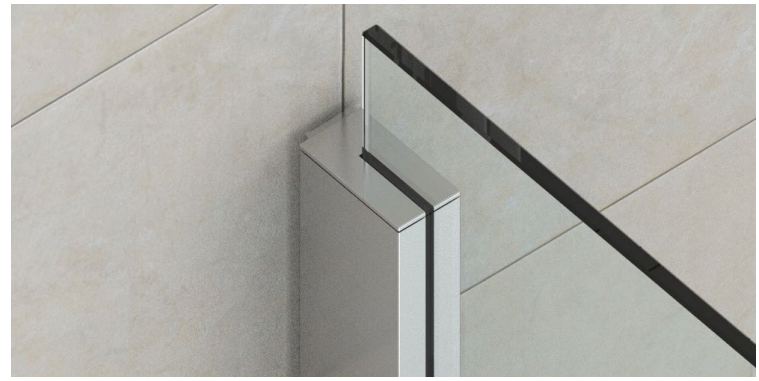

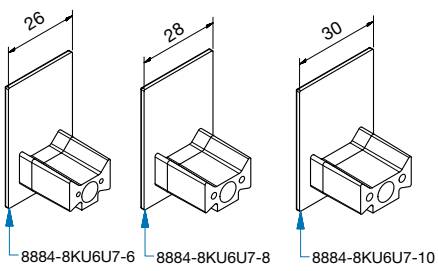

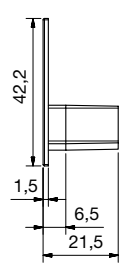

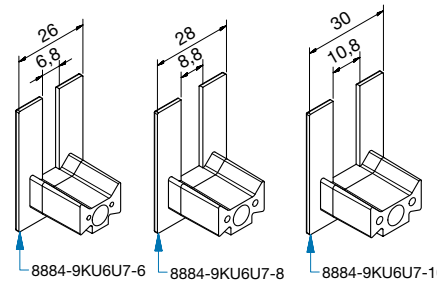

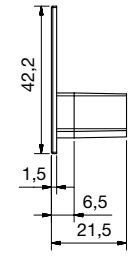

article no.	finishes	glass thickness	article description	pu/pieces
8884-8KU6U7-6	*	6 mm	end cap for clamping profile 8884, closed	1/1
8884-8KU22-6	**			
8884-8KU6U7-8	*	8 mm		
8884-8KU22-8	**			
8884-8KU6U7-10	*	10 mm		
8884-8KU22-10	**			

* KU6U7 is for E6/EV1 and E6/EV5

* * KU22 is for E1/23

article no.	finishes	glass thickness	article description	pu/pieces
8884-9KU6U7-6	*	6 mm	end cap for clamping profile 8884, notched	1/1
8884-9KU22-6	**			
8884-9KU6U7-8	*	8 mm		
8884-9KU22-8	**			
8884-9KU6U7-10	*	10 mm		
8884-9KU22-10	**			



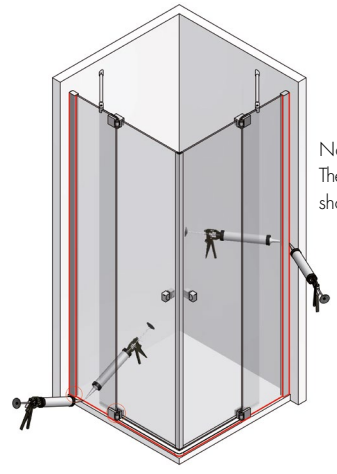

Note:
The clamp profile as well as the glass of the shower must be silicone sealed.



product overview

a wide range of solutions for different requirements

With our range of products, it is possible to create large-scale installations without, or with only a few, additional stabilising rods.

- wide range of products
- particularly suitable for bespoke solutions
- maximum scope for creativity
- can be combined with shower door hinges, corner brackets and profiles
- A range of solutions – implemented quickly
- easy installation



WALK-IN system profile
from page 502





WALK-IN system profile
from page 512



WALK-IN with hinges
You can find a range of angle brackets at our various shower hinges ranges.



WALK-IN mit hinges and floor to ceiling eypansion tube
from page 516



WALK-IN with clamping and U-profiles from page 486

Connection options

MADE IN GERMANY

Partition wall supports



wall **(BW)**



ceiling **(BD)**



fixed glazing



wall conection profile 8830
page 487



clamping profiles 8884
page 494

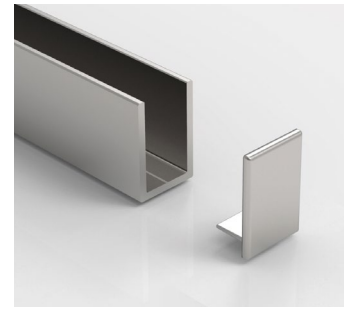

u-profiles
page 489

Mounting options

MADE IN GERMANY

type WALK-IN with system profile - ceiling mounted

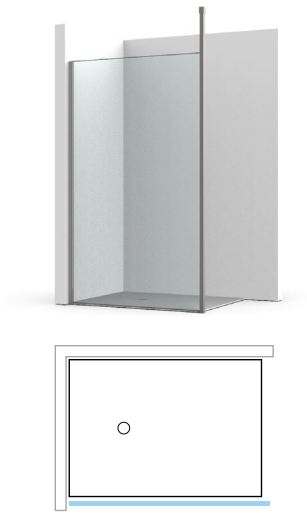

900

components required:
1x Fixing options for fixed glazing
(options on the page 503)
1x 8888E__-BD (Seite 504)



901

components required:
1x Fixing options for fixed glazing
(options on the page 503)
1x 8888E__-BD
1x 8888E__-BD2N (Seite 505)



902

components required:
2x 1x 8888E__-BD (page 504)

type WALK-IN with system profile - wall mounted

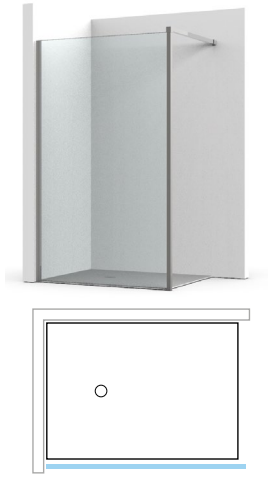

903

components required:
1x Fixing options for fixed glazing
(options on the page 503)
1x 8888E__-BW (Seite 506)



904

components required:
2x 8888E__-BW (page 506)

type WALK-IN with hardware and system profile

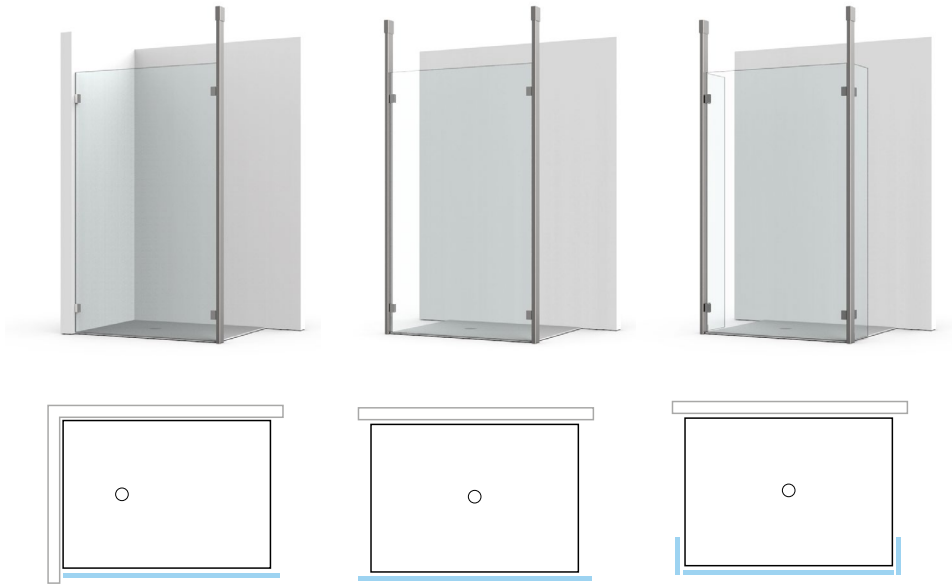

PONTERE+		800	801	802
FLAMEA pro		800	801	802
FLAMEA+		800	801	802
FARDELLO		800	801	802
FLAMEA pro mini		800	801	802
FLAMEA		800	801	802
PAVONE		800	801	802
TURA		800	801	802
FARFALLA		800	801	802
FLINTER pro		800	801	802
FLINTER		800	801	802
NIVELLO+		800	801	802
NIVELLO		800	801	802
FLUTURE		800	801	802



Depending on the application example, the quantity and arrangement of the stabilization bars and angles can vary. Please ask our technical service.

type WALK-IN with hardware



	700	701	702	703	704
	700	701	702	703	704
	700	701	702	703	704
	700	701	702	703	704
	700	701	702	703	704
	700	701	702	703	704
	700	701	702	703	704
	700	701	702	703	704
	700	701	702	703	704
	700	701	702	703	704
	700	701	702	703	704
	700	701	702	703	704
	700	701	702	703	704
	700	701	702	703	704
	700	701	702	703	704

Depending on the application example, the quantity and arrangement of the stabilization bars and angles can vary. Please ask our technical service.



Please note: In this installation scenario, the short side panel must be glued in place!

WALK-IN system profil

A range of solutions – implemented quickly

Connection options

MADE IN GERMANY

- length: 2800 mm
- tube can be shortened in length
- tube 32 x 32 mm
- especially suitable for individual solutions
- maximum design freedom
- easy and fast assembly
- Vertical installation using just 2 rubber profiles
- saves on costly and time-consuming silicone moulding
- compensation of inclined walls up to approx. 6 mm
- installation with LEDs possible
- concealed screw connection
- no additional stabilization bars required

- due to the divided rubber profile, the glass pane can be inserted without any problems.





- we offer various possibilities for connection to the floor. Both variants must be sealed with silicone.



glued version


Please note: To ensure that the water barrier in the bathroom is not compromised by drilling into the lower fixing plate at a later stage, the tiler should first incorporate the fixing adapter into the floor structure and apply the correct damp-proofing in accordance with the load class and recognised guidelines. Alternatively, an adhesive fixing option is available for installation.

BD version with one glass panel - mounted to the ceiling

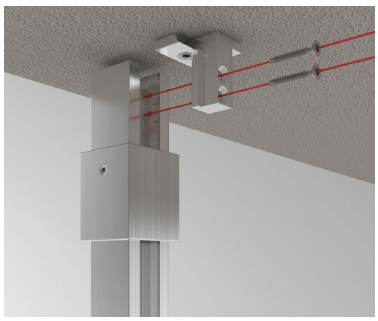






partition wall support floor-ceiling, 1 slot 15 x 15 mm, length 2800 mm



U-profile as filler above the glass edge towards the ceiling

article no.	glass thickness
8888__-BD	8 mm with glazing profiles or silicone seam
	10 mm with silicone seam
	12 mm with silicone seam

finish		
	E6EV5	aluminium gloss anodized
	E3/50	gloss chrome
	E123	stainless steel optic
	E6C35	black anodized

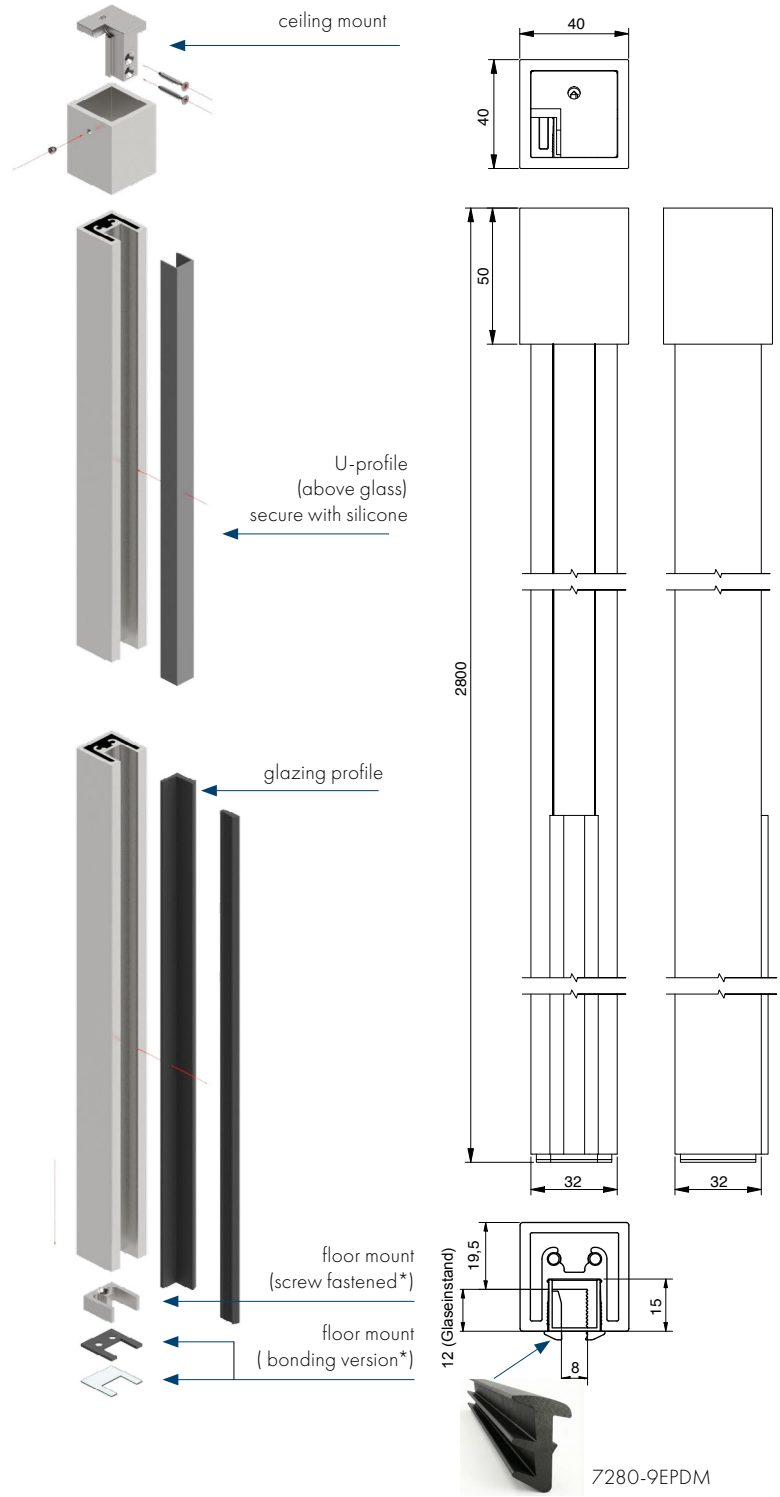

* In order to prevent the water barrier in the bathroom from being damaged by subsequent drilling of the lower mounting plate, the tiler should install the mounting adapter into the floor structure beforehand and carry out the correct moisture barrier according to the exposure class in accordance with the recognized guidelines.

BD2N version with two panels - mounted to the ceiling

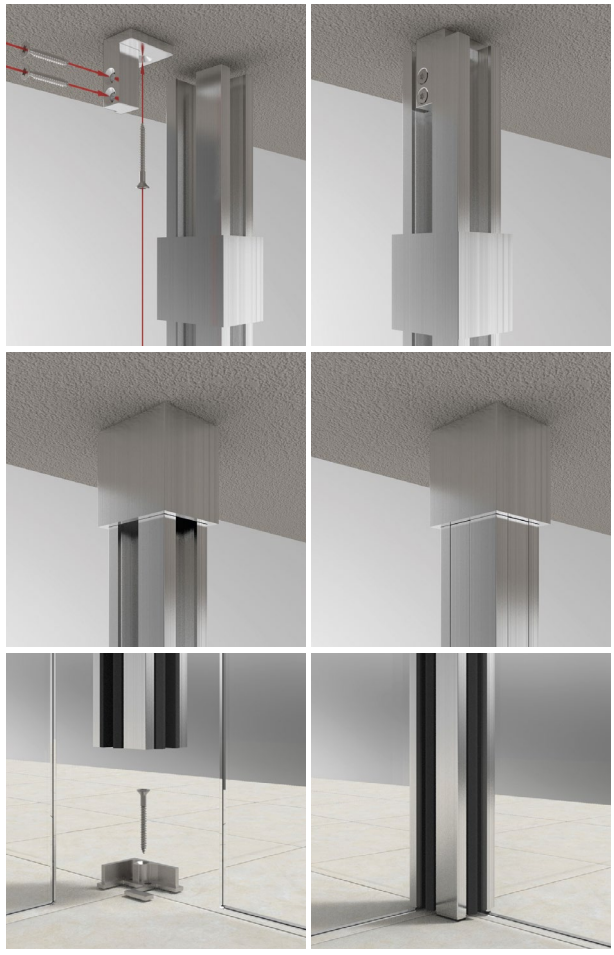

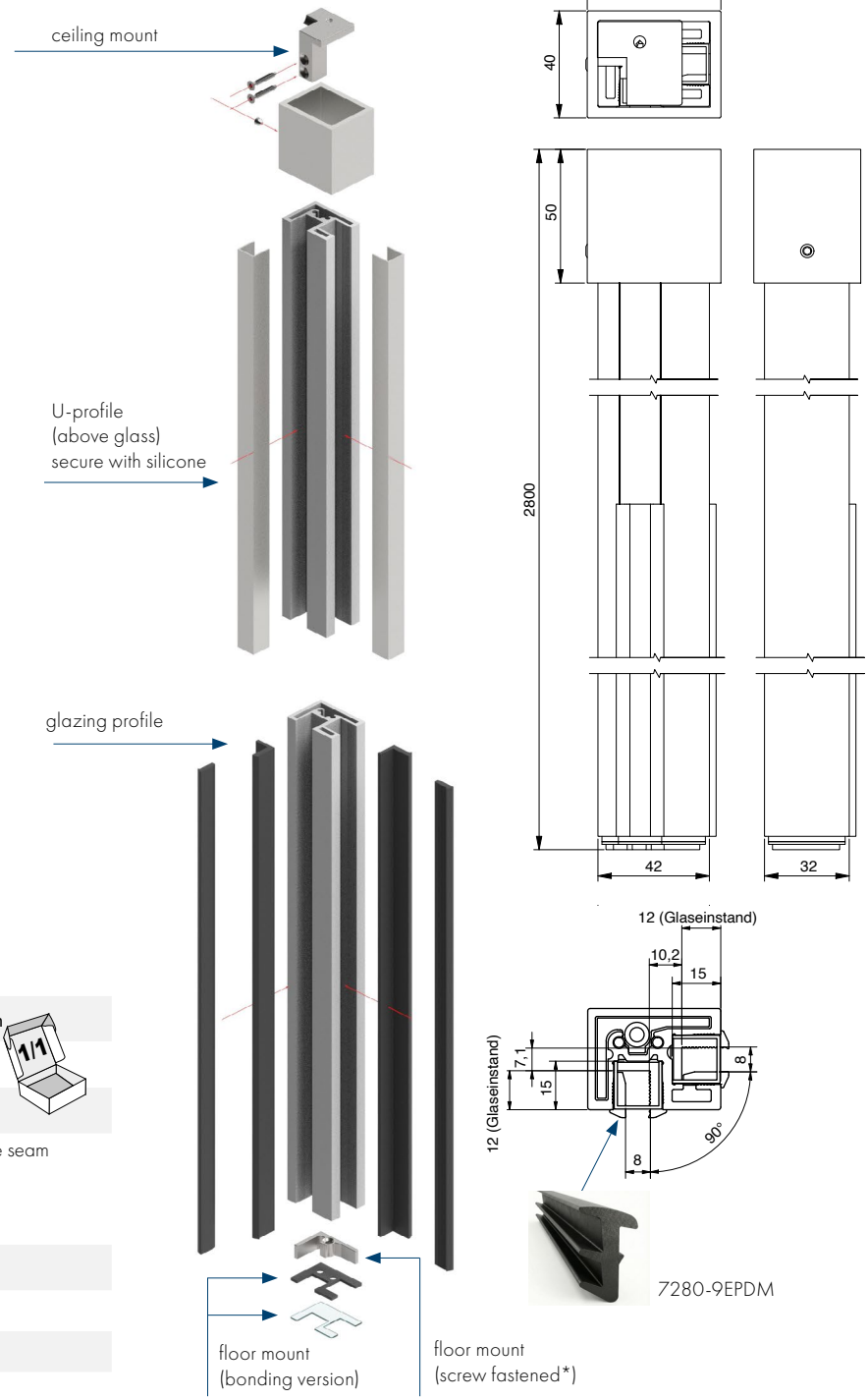

partition wall support floor-ceiling 90°, 2 slot 15 x 15 mm, length 2800 mm	
U-profile as filler above the glass edge towards the ceiling	
article no.	**glass thickness**
8888__-BD2N	8 mm with glazing profiles or silicone seam
	10 mm with silicone seam
	12 mm with silicone seam

finish		
	E6EV5	aluminium gloss anodized
	E3/50	gloss chrome
	E123	stainless steel optic
	E6C35	black anodized

BW version with one glass panel – with a corner connector to the wall

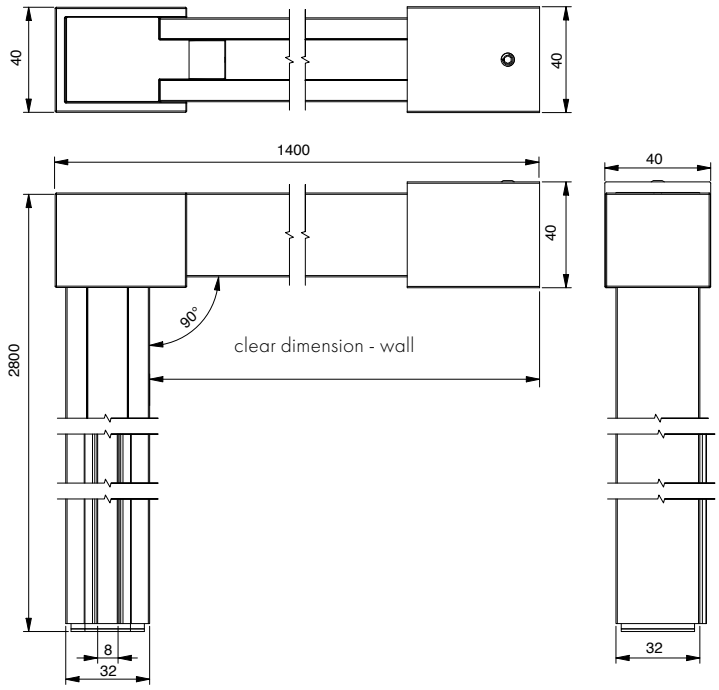

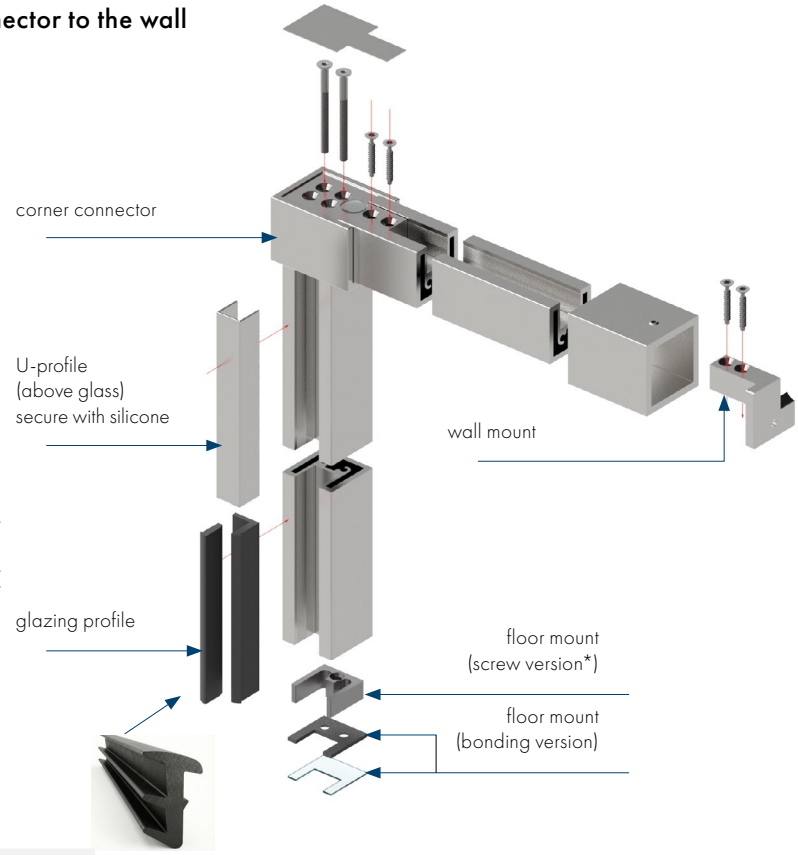

partition wall support floor-wall, 1 slot 15 x 15 mm, length 2800 mm + 1400 mm	
U-profile as filler above the glass edge towards the ceiling	
article no.	**glass thickness**
8888__-BW	8 mm with glazing profiles or silicone seam
	10 mm with silicone seam
	12 mm with silicone seam

finish		
	E6EV5	aluminium gloss anodized
	E3/50	gloss chrome
	E123	stainless steel optic
	E6C35	black anodized

*The corner connector is included in the set and does not need to be ordered separately.

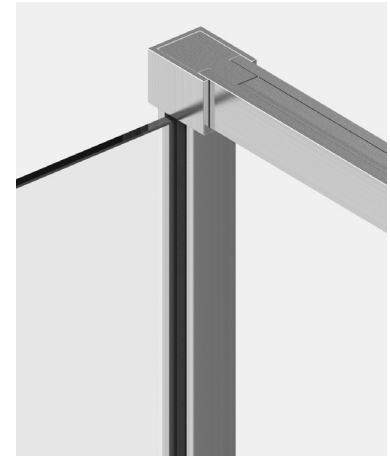

* To ensure that the water barrier in the bathroom is not violated by subsequent drilling of the lower fastening plate, the tiler should work the fastening adapter into the floor structure beforehand and apply the correct damp-proofing in accordance with the recognized guidelines for the respective stress class.

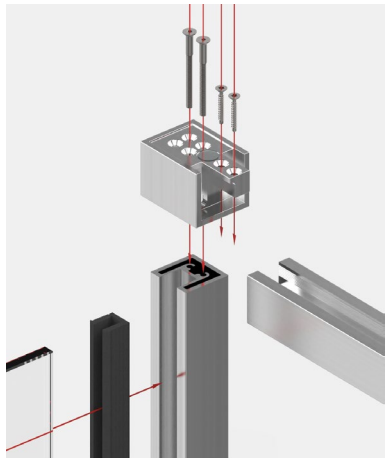

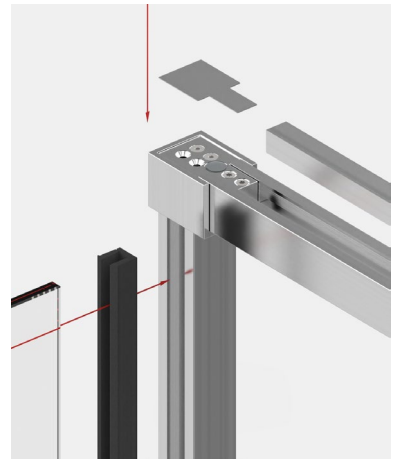





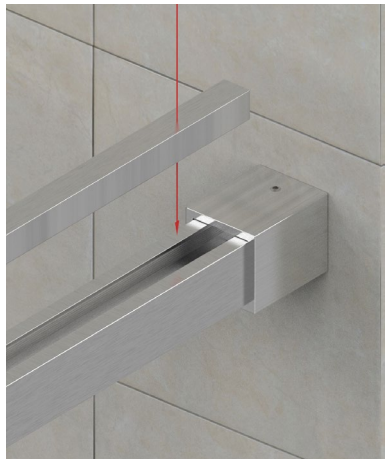



planning notes: corner configuration (BW)

MADE IN GERMANY

The top edge of the glass is flush with the **top edge** of the corner joint





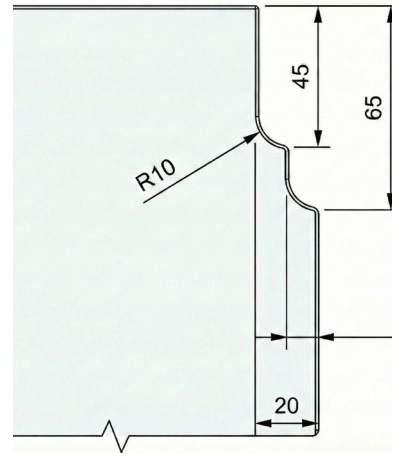

Side panel requires a corner cut-out

The top edge of the glass is flush with the **bottom edge** of the corner connector.
The stabilising bar attached to the wall extends above the glass.

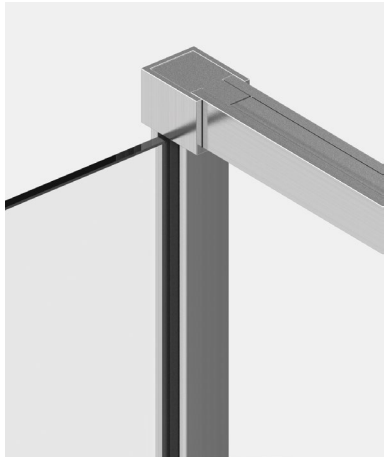

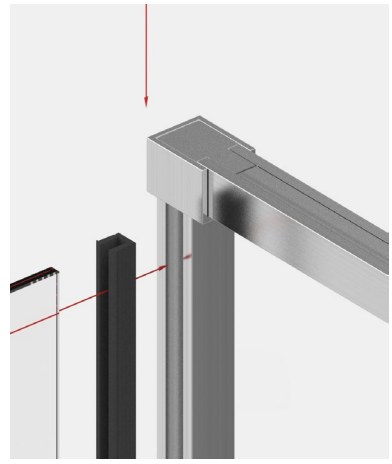

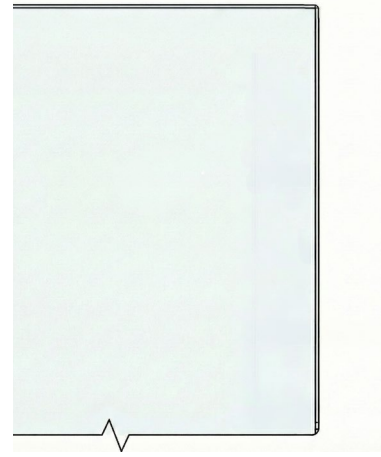

The side panel **does not require** a corner cut-out



Version without corner cut-out

WALK-IN system profil

A range of solutions – implemented quickly



WALK-IN with rungs

If you are interested in this "Factory Style" design solution, please contact us – we would be happy to offer you this complete set, or we can put together a bespoke solution for you.









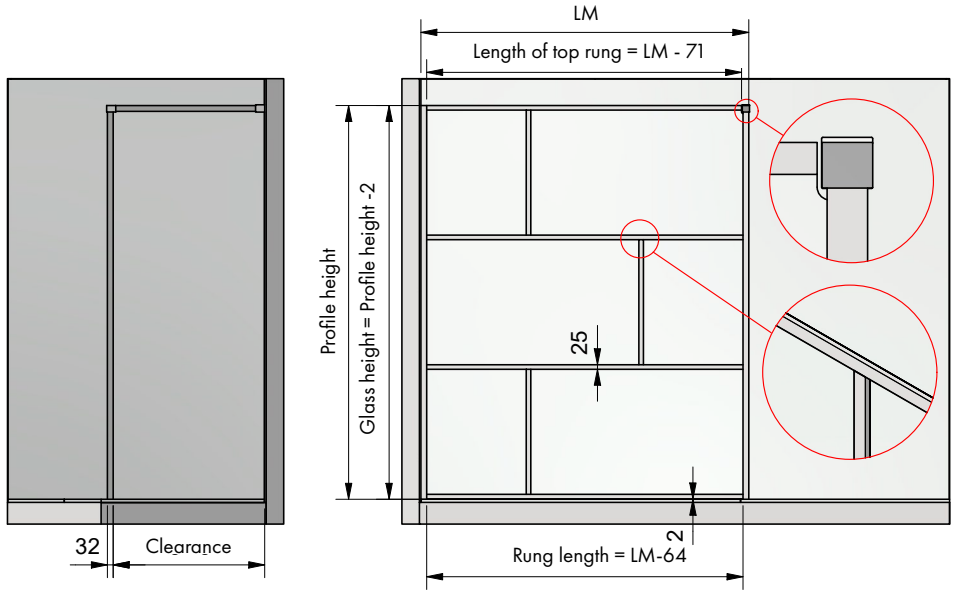

Adhesive-bonded rungs
Art. No.: 3300-14E6C35 and adhesive tape Art. No.: 3300-79KL on painted glass on the front side

Connection options

MADE IN GERMANY

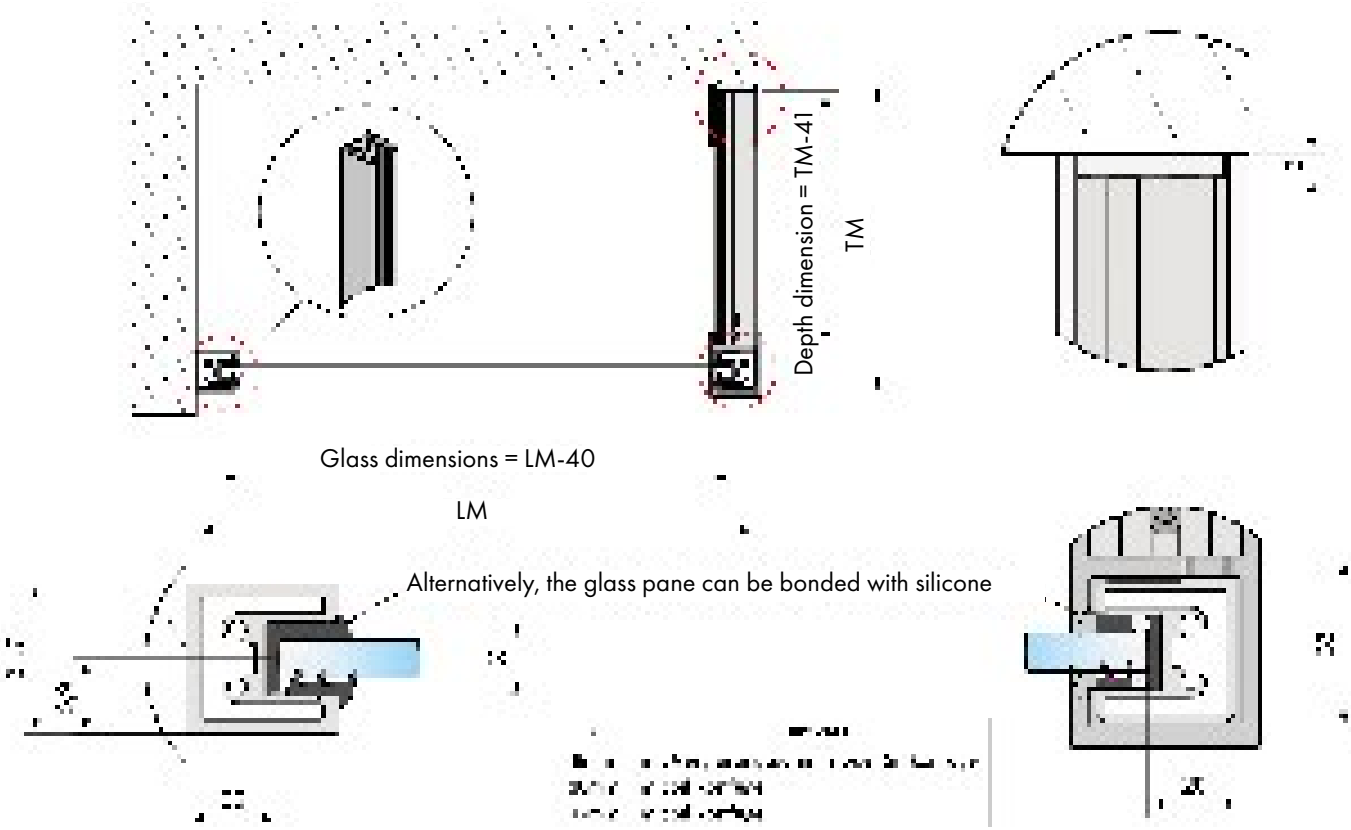

Component overview for this application:

Wall side:
1x 8888-1E6C35 | Tube for partition wall support, 32x32x2,800mm
8830-4KU | Fixed glazing gasket (soft), length 2,500 mm
8830-5KU | Fixed glazing wedge (hard), length 2,500 mm

Opening side:
1x 8888E6C35-BW | Set consisting of: 1x tube forpartition wall support, 2,800 mm high, and 1x 1,400 mm tube forwall stabilization + fixed glazing gasket (hard + soft), coupling sleeve, corner connector, wall connection piece

Rungs:
Rungs:3300-14E6C35 | Rung profile, black, length: 5,000 mm
3300-79KL | PE foam tape, 6 mm wide, 50 m long

NOTE:

LM and TM are each measured from the wallto the outer edge of the partition wall support 8888-1E6C35.

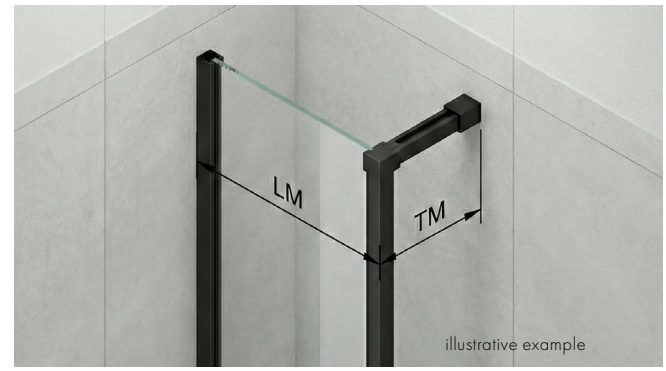

Planning guidelines

MADE IN GERMANY





Install the glass panel using the following two items:
8830-4KU | Fixed glazing gasket (soft)
8830-5KU | Fixed glazing wedge (hard)

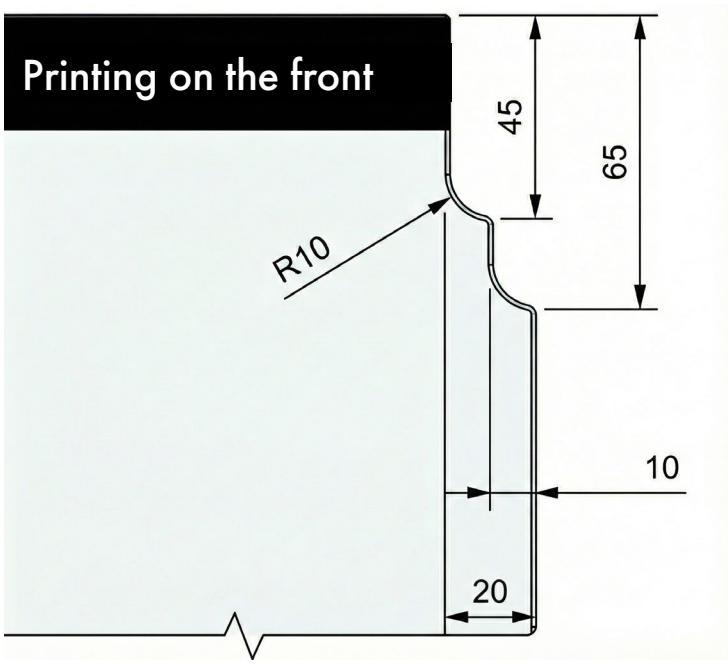

The side panel requires a corner cutout, since its top edge is flush with the stabilizing bar

Planning guidelines

MADE IN GERMANY





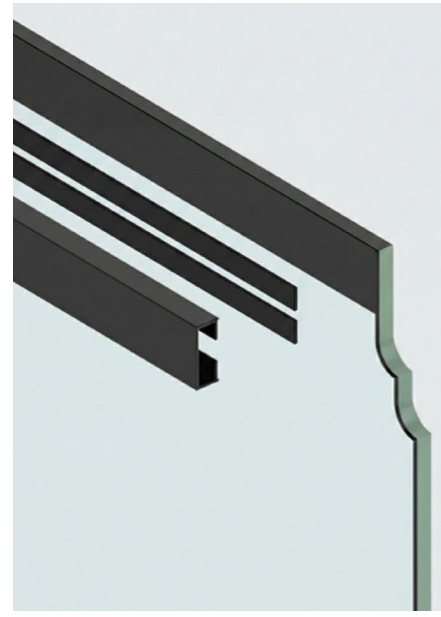

1.
First, apply the PE foam tape to both surfaces of the rung profile.Both surfaces to be bonded (aluminum profile and glass) must be free of grease and dust and cleaned accordingly.
Use only isopropyl alcohol or special industrial cleaners.
Caution: Do not use rubbing alcohol, glass cleaners containing silicones, or household cleaners.
Allow the cleaning agent to evaporate completely before applying the tape.
Make sure there is no condensation on the cold glass panel.

2.
Position the profile precisely (corrections are virtually impossible once contact has been made). Press the profile firmly along its entire length. Ideally, use a pressure roller for this. High pressure is crucial for activating theadhesive. The bond reaches its full final strength after approximately 24hours.

NOTE:
For single-sided adhesive glazing rungs, we recommend applying an opaque coating or print to the back of the glass in this area.



Double-sided PE foam tape, 6 mm x 50 m, thickness: 1 mm

	Art.-Nr.	Material	Surface color
	3300-79KL	PE	black

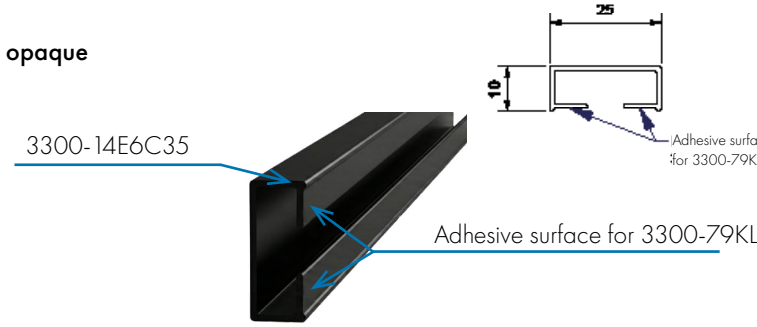

Grundprofil 25x10mm schwarz eloxiert, Länge 5m

	Art.-Nr.	Material	Surface color
	3300-14E6C35	Aluminium	black matt



floor to ceiling expansion tube

The ceiling to floor expansion tube is suitable for fastening door panels, angle brackets and u-profiles.

- surface finish: gloss anodized (E6/EV5)
- length: 3000mm
- tube can be cut to desired length
- tube 69x29mm

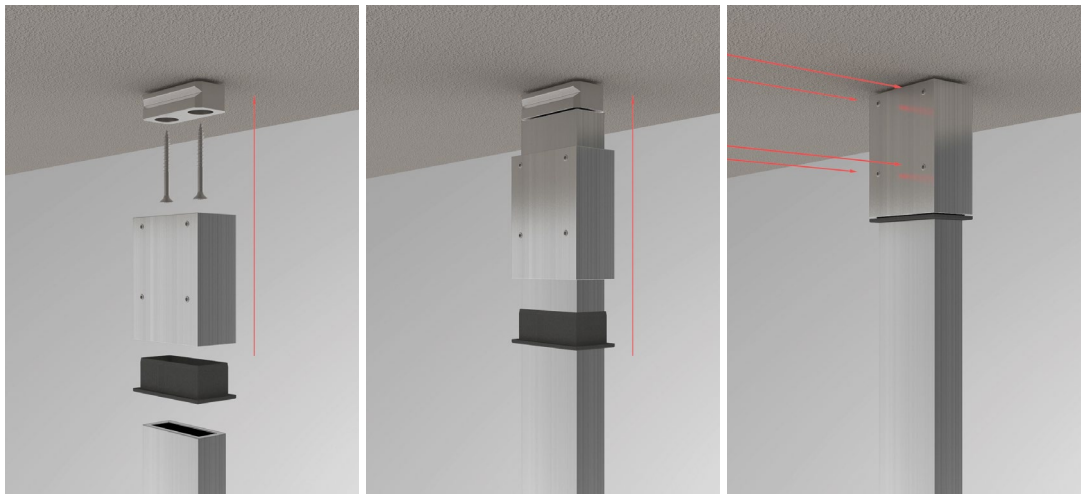

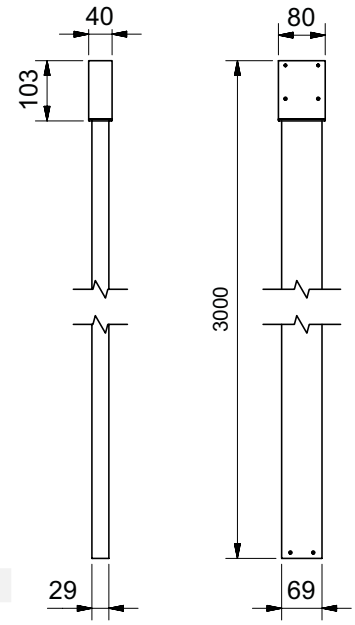

profile

tube 69x29 mm, material thickness: 5 mm, tube can be cut to desired length

	article no.	material	finishes	length
	8885E6EV5-3000	aluminium	gloss anodized	3000 mm

Note: when mounting door panels to partition wall posts, please refer to our application technology for possible door sizes. We're here to help!

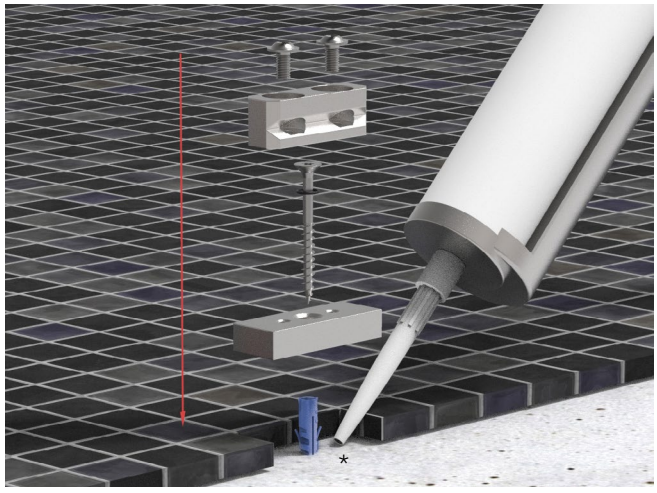

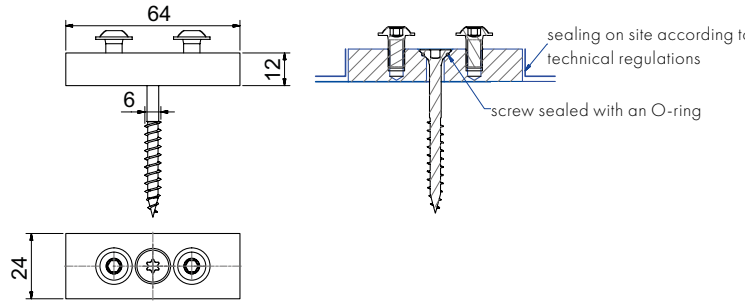

to ensure that the water barrier in the bath is not damaged by the subsequent drilling of the lower mounting plate, the tiler should first install the fastening adapter on to the floor structure and carry out the correct moisture seal in accordance with the recognized guidelines.

adapter plate

	article no.	material	finishes	length
	8887E6EV1-12	aluminium	aluminum optic	3000 mm




pauli





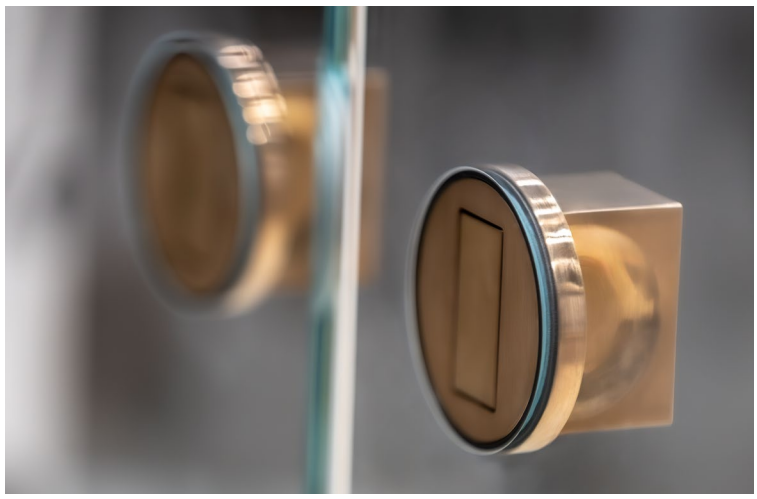





door knops
various solutions from page 520

towel holder
various solutions from page 552

Stabiliser bars
various solutions from page 564

accessories

round handles

MADE IN GERMANY

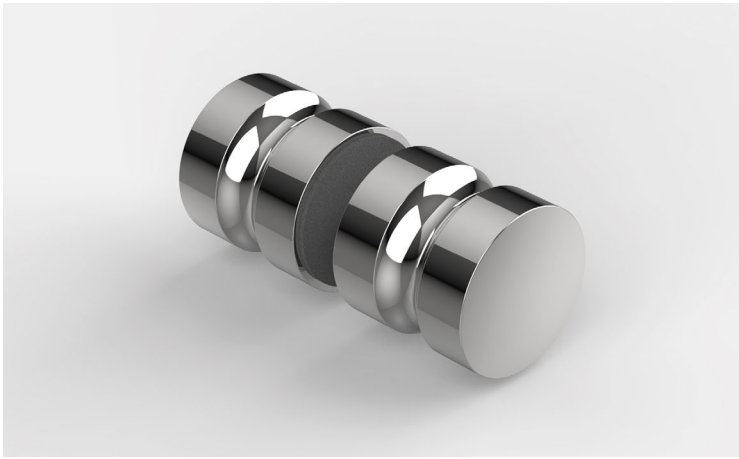

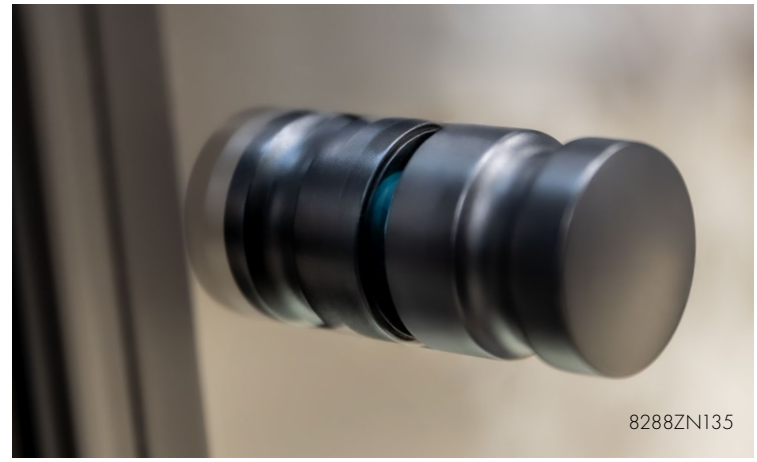

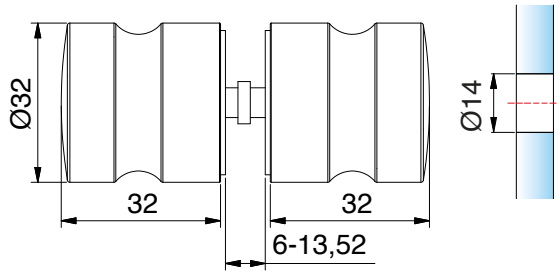

glass door knob double sided

Art.-Nr.	Glasdicke
8288_	6 - 13,52 mm

1/1

finish

ZN5	gloss chrome
ZN1	matt chrome
ZNPVD22	stainless steel optic
ZNPVD20	gold optic
ZNPVD35	schwarz matt
ZN135	deep black matt
ZN134	white matt
ZNPVD39	gold bronze brushed
ZNPVD40	gold optic brushed
ZNPVD41	copper optic brushed
ZNPVD42	graphite metal optic brushed





round handles

MADE IN GERMANY





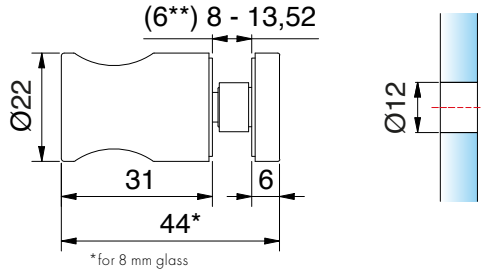

*for 8 mm glass

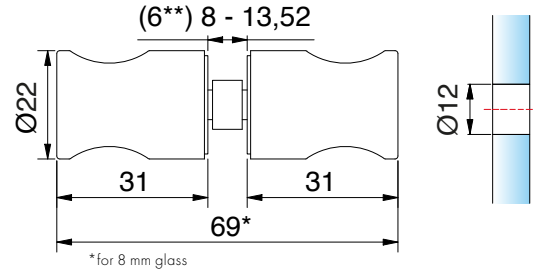

*for 8 mm glass

glass door knob single sided		
article no		glass thickness
8698_		(6**) 8 - 13,52 mm
finish		
ZN5	gloss chrome	
ZN1	matt chrome	
ZNPVD22	stainless steel optic	
ZNPVD20	gold optic	
ZN135	deep black matt	

glass door knob double sided		
article no		glass thickness
8697_		(6**) 8 - 13,52 mm
finish		
ZN5	gloss chrome	
ZN1	matt chrome	
ZNPVD22	stainless steel optic	
ZNPVD20	gold optic	
ZN135	deep black matt	

**article no. 8686-7HZ replaces article no. 8686-5HZ when using FTG-6 . 8686-7HZ must be ordered separately for ESG-6.

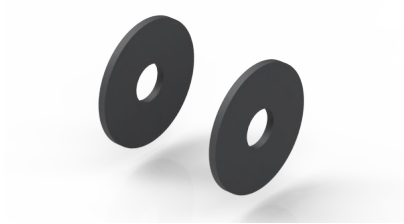

article no.	article description
8686-7HZ	HZ Inlay for 6 mm glass (round)

round handles

MADE IN GERMANY

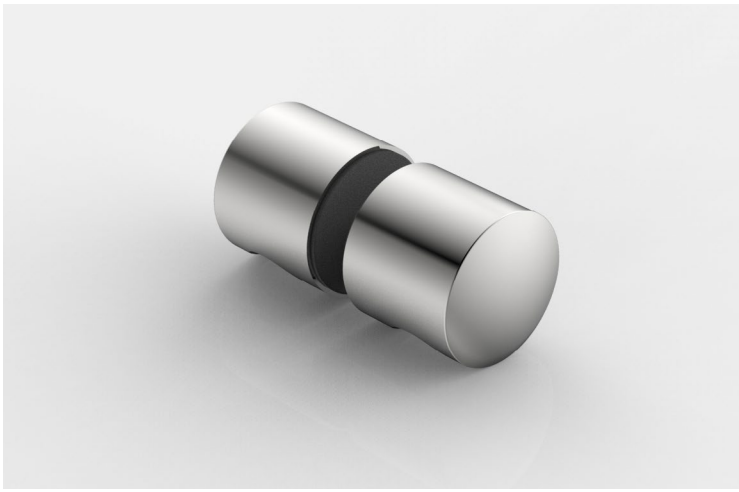



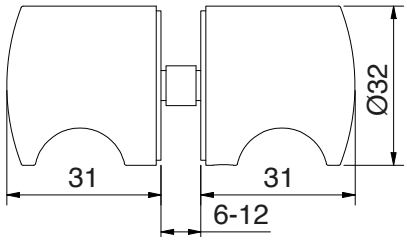

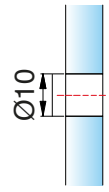

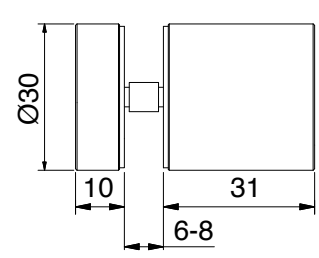

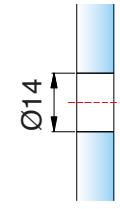

glass door knob, double sided		
article no.	glass thickness	
8282__	6 - 13,52 mm	
finish		
MS7*	gloss chrome	



glass door knob one sided		
article no.	glass thickness	
8502VA	6-8 mm	
finish		
VA	stainless steel	

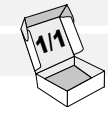

* Artikel auf Auslaiuf

The O-rings can be removed for cleaning purposes. Special "fixed O-rings" for the object area can be ordered separately using article number 8298-4KU.

round handles

MADE IN GERMANY



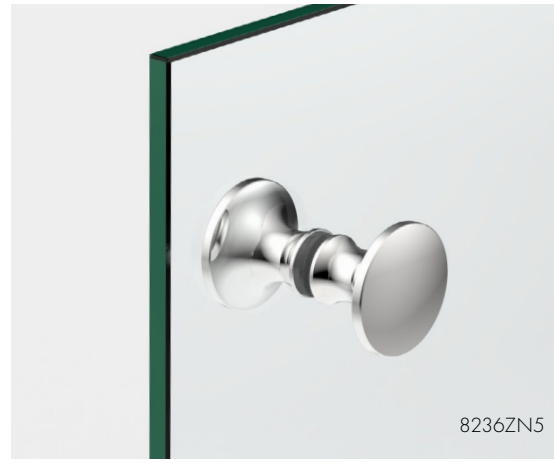

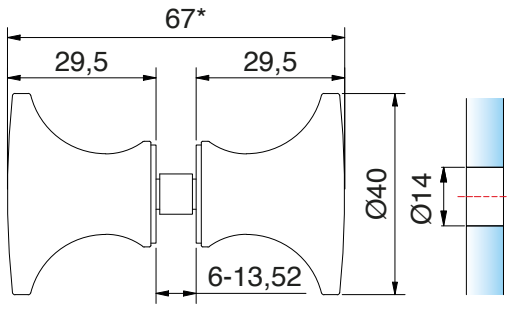

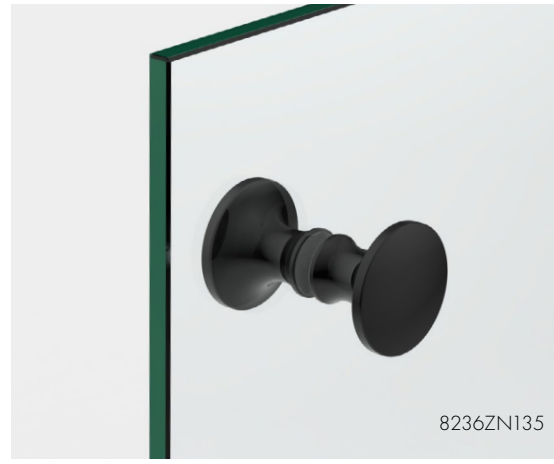

glass door knob, double sided

article no.	glass thickness
8236_	6 - 13,52 mm

finish		
	ZN5	gloss chrome
	ZN1*	matt chrome
	ZNPVD22	stainless steel optic
	ZNPVD35*	black matt
	ZN134	white matt
	ZN135	deep black matt
	ZNPVD39	gold bronze brushed
	ZNPVD40	gold optic brushed
	ZNPVD41	copper optic brushed
	ZNPVD42	graphite-metal optic brushed

*article discontinued

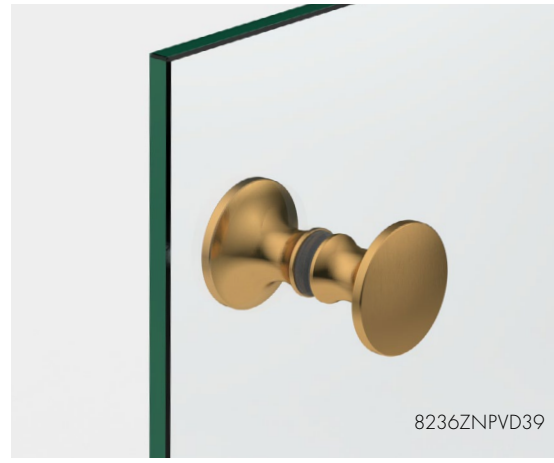

round handles

MADE IN GERMANY





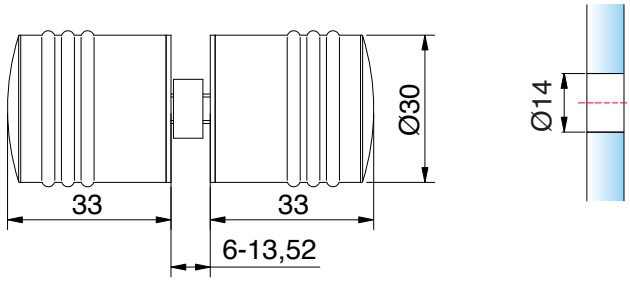

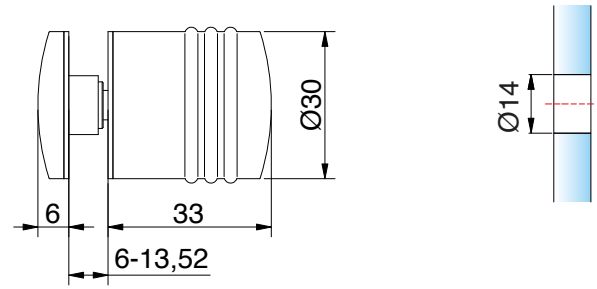

glass door knob, double sided			
article no.		glass thickness	1/1
8298__		6 - 13,52 mm	
finish			
	ZN5	gloss chrome	
	ZN1	matt chrome	
	ZNPVD22	stainless steel optic	
	ZNPVD20*	gold optic	
	ZNPVD35*	black matt	
	ZN135	deep black matt	

glass door knob one sided			
article no.		glass thickness	1/1
8299__		6 - 13,52 mm	
finish			
	ZN5	gloss chrome	
	ZN1	matt chrome	
	ZNPVD22	stainless steel optic	
	ZNPVD20*	gold optic	
	ZNPVD35*	black matt	
	ZN135	deep black matt	

*article discontinued

round handles

MADE IN GERMANY





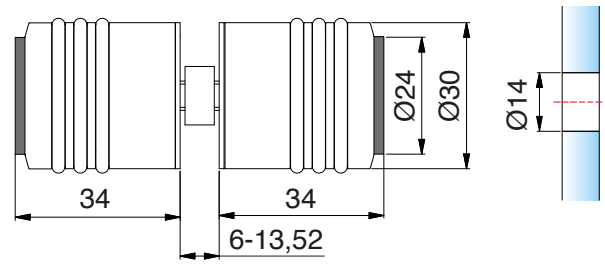

glass door knob double sided		
article no.		glass thickness
8694__		6 - 13,52 mm
finish		
ZN5	gloss chrome	
ZN1	matt chrome	
ZNPVD22	stainless steel optic	
ZNPVD35*	black matt	
ZN135	deep black matt	



*article discontinued

round handles

MADE IN GERMANY





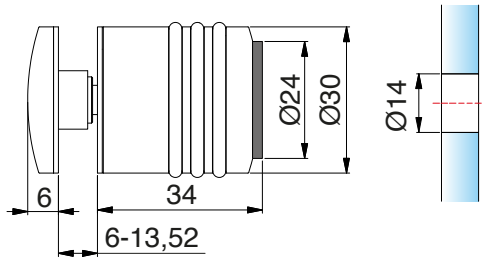

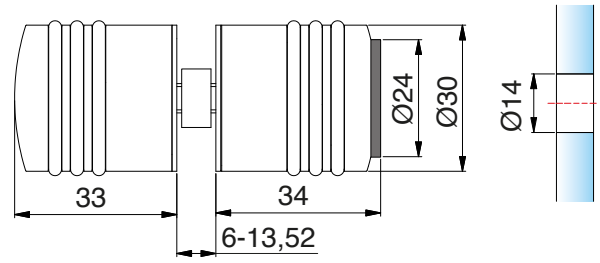

glass door knob one sided		
article no.		glass thickness
8293__		6 - 13,52 mm
finish		
	ZN5	gloss chrome
	ZN1	matt chrome
	ZNPVD22	stainless steel optic
	ZNPVD35*	black matt
	ZN135	deep black matt



glass door knob, double-sided, with a rubber stop on one side		
article no.		glass thickness
8294__		6 - 13,52 mm
finish		
	ZN5	gloss chrome
	ZN1	matt chrome
	ZNPVD22	stainless steel optic
	ZN135	deep black matt

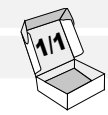

*article discontinued

The O-rings can be removed for cleaning purposes. Special "fixed O-rings" for the object area can be ordered separately using article number 8298-4KU.

round handles

MADE IN GERMANY





8293ZN



8294ZN

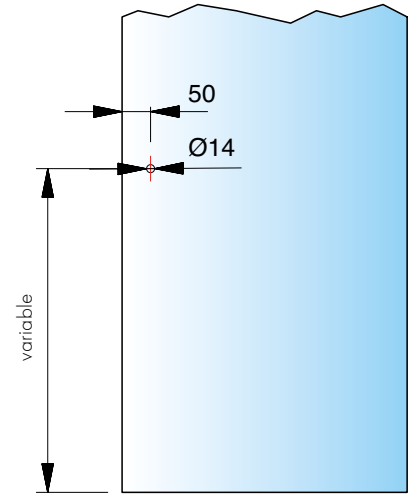

borehole spacings

angular handles

MADE IN GERMANY

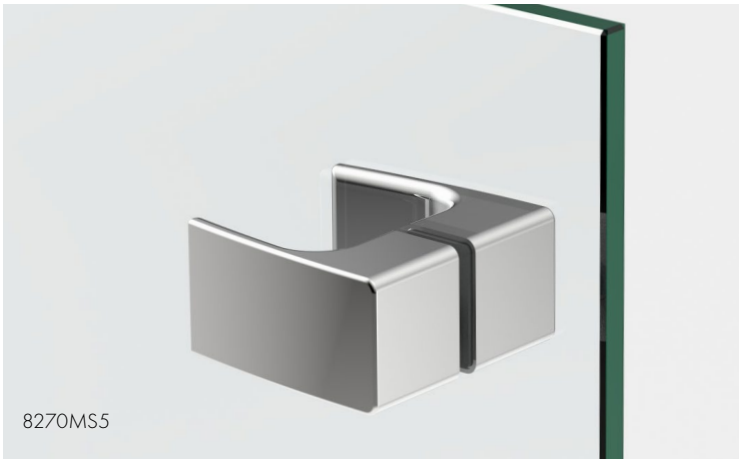

8270MS5

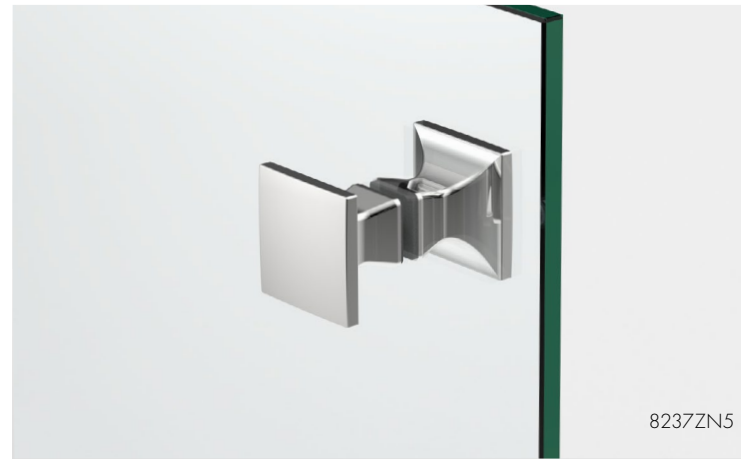

8237ZN5

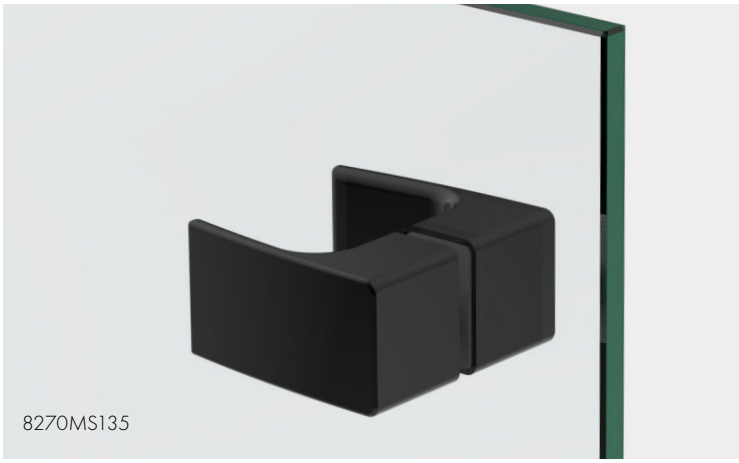

8270MS135

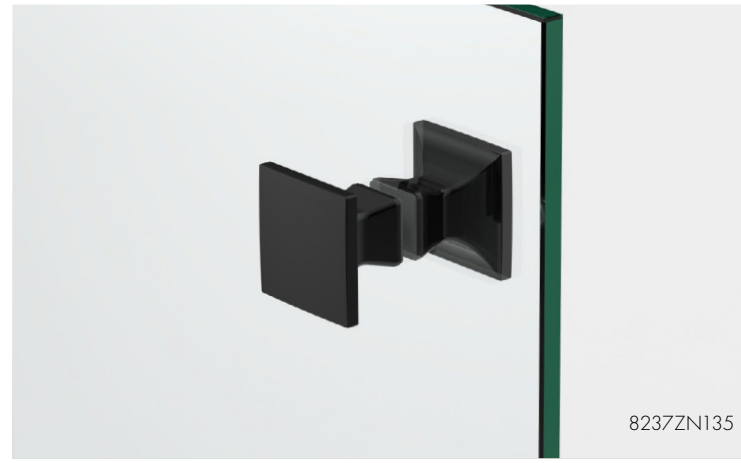

8237ZN135

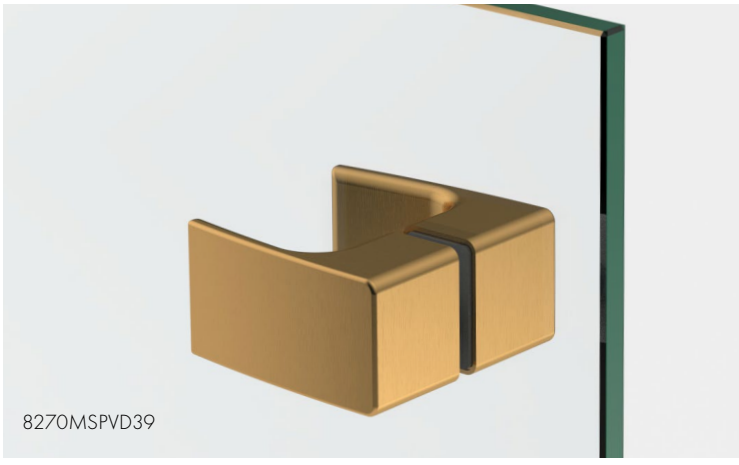

8270MSPVD39

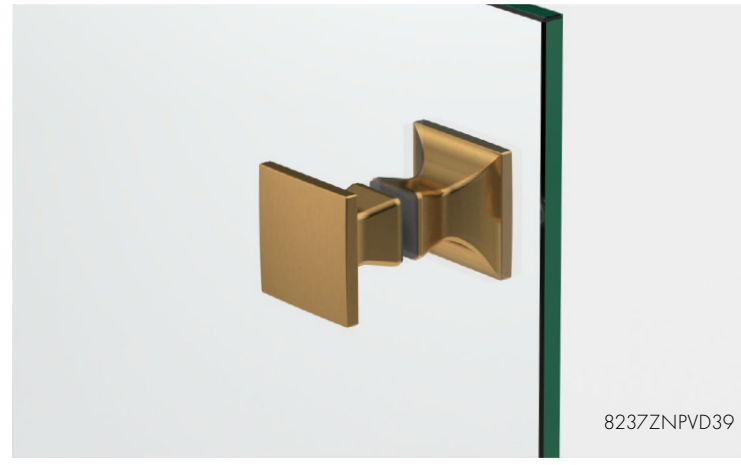

8237ZNPVD39

angular handles

MADE IN GERMANY





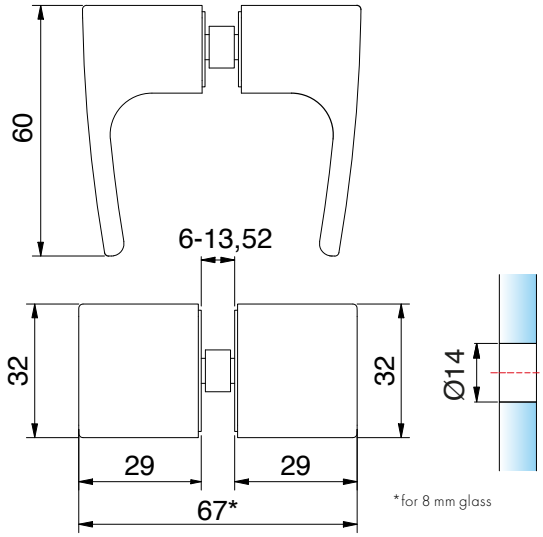

*for 8 mm glass

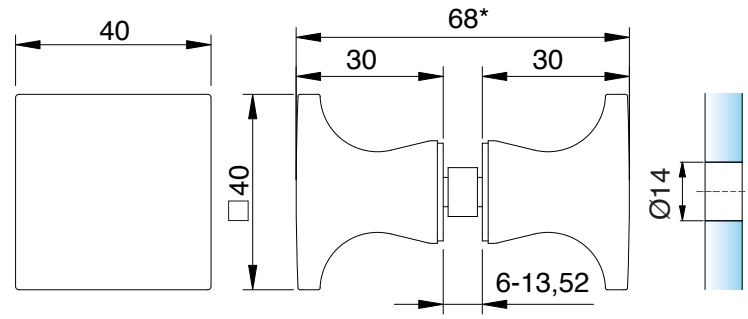

*for 8 mm glass

glass door knob double sided	
article no	glass thickness
8270_	6-13,52 mm

finish		
	MS7	gloss chrome
	MSPVD22	stainless steel optic
	MS135	deep black matt
	MSPVD39	gold bronze brushed
	MSPVD40	gold optic brushed
	MSPVD41	copper optic brushed
	MSPVD42	graphite metal optic brushed

glass door knob double sided	
article no	glass thickness
8237_	6-13,52 mm

finish		
	ZN5	gloss chrome
	ZN1*	matt chrome
	ZNPVD22	stainless steel optic
	ZNPVD35*	black matt
	ZN134	white matt
	ZN135	deep black matt
	ZNPVD39	gold bronze brushed
	ZNPVD40	gold optic brushed
	ZNPVD41	copper optic brushed
	ZNPVD42	graphite metal optic brushed

*article discontinued

angular handles

MADE IN GERMANY





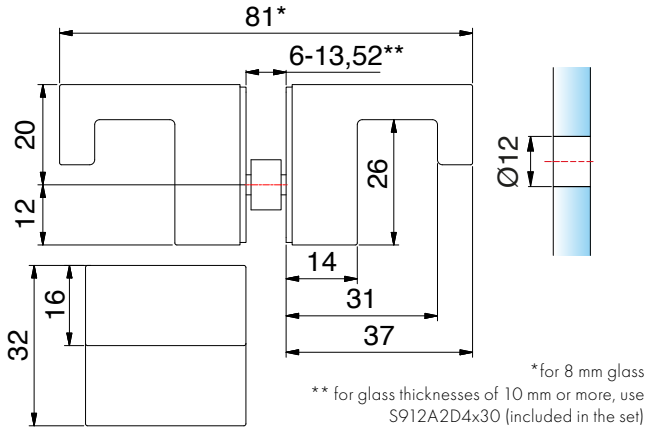

*for 8 mm glass
** for glass thicknesses of 10 mm or more, use S912A2D4x30 (included in the set)



glass door knob double sided		
article no		glass thickness
8252__		6-13,52 mm**
finish		
	ZN5	gloss chrome
	ZN1*	matt chrome
	ZNPVD22	stainless steel optic
	ZNPVD20*	Goldoptik
	ZN135	deep black matt



*article discontinued

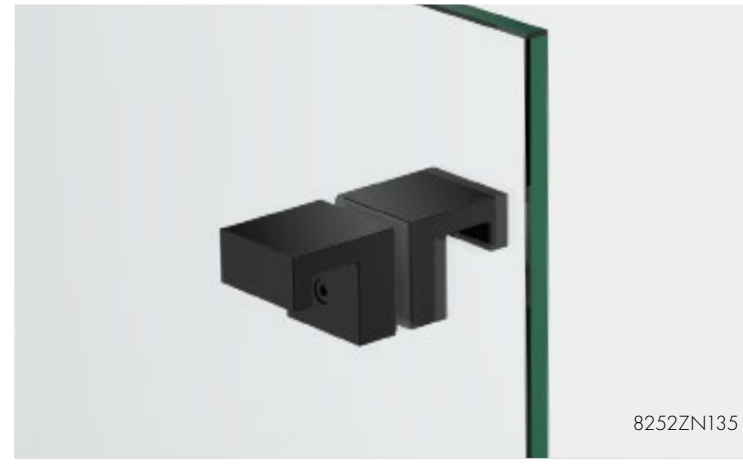

angular handles

MADE IN GERMANY



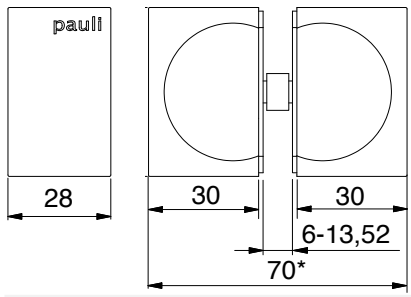

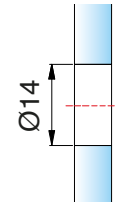

*for 8 mm glass

glass door knob double sided

article no	glass thickness
8278_	6-13,52 mm

finish

	ZN5	gloss chrome
	ZN5-A	gloss chrome
	ZN1	matt chrome
	ZN1-A*	matt chrome
	ZN10	gloss nickel
	ZN134	white matt
	ZN135	deep black matt
	ZN135-A	deep black matt
	ZNPVD35*	black matt
	ZNPVD20	gold optic
	ZNPVD22	stainless steel optic
	ZNPVD39	gold bronze brushed
	ZNPVD40	gold optic brushed
	ZNPVD41	copper optic brushed
	ZNPVD42	graphite metal optic brushed



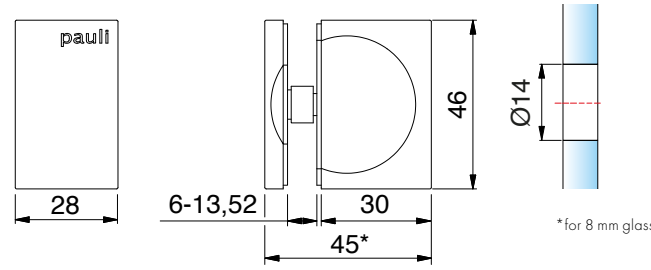

*for 8 mm glass

glass door knob one sided

article no	glass thickness
8275_	6-13,52 mm

finish

	ZN5	gloss chrome
	ZN1	matt chrome
	ZNPVD22	stainless steel optic
	ZN134	white matt
	ZN135	deep black matt
	ZNPVD39	gold bronze brushed
	ZNPVD40	gold optic brushed
	ZNPVD41	copper optic brushed
	ZNPVD42	graphite metal optic brushed

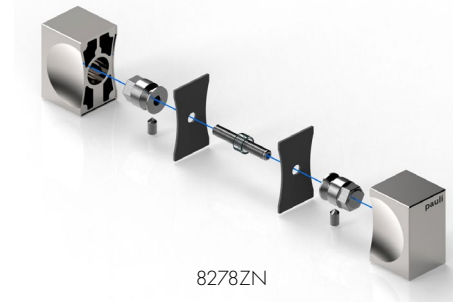

8278ZN

A = without logo
*article discontinued

ACCESSORIES

angular handles

MADE IN GERMANY



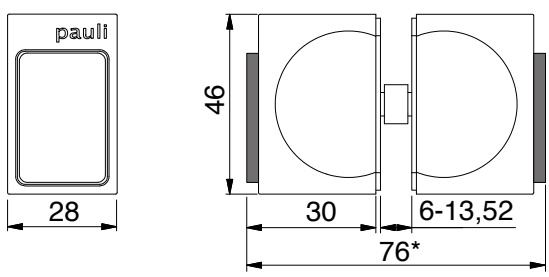

*for 8 mm glass

Glass door knob, double-sided, with rubber stops on both sides		
article no		glass thickness
8263_		6-13,52 mm
finish		
	ZN5	gloss chrome
	ZN1	matt chrome
	ZNPVD22	stainless steel optic
	ZNPVD35*	black matt
	ZN134	white matt
	ZN135	deep black matt
	ZNPVD39	gold bronze brushed
	ZNPVD40	gold optic brushed
	ZNPVD41	copper optic brushed
	ZNPVD42	graphite metal optic brushed

*article discontinued





8271ZN



8273ZN

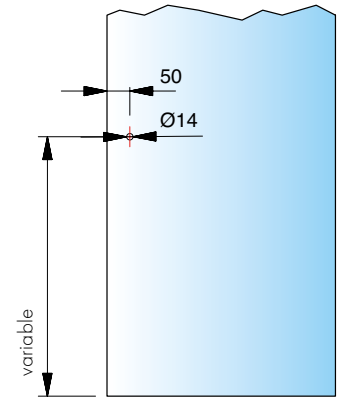

borehole spacings

angular handles

MADE IN GERMANY

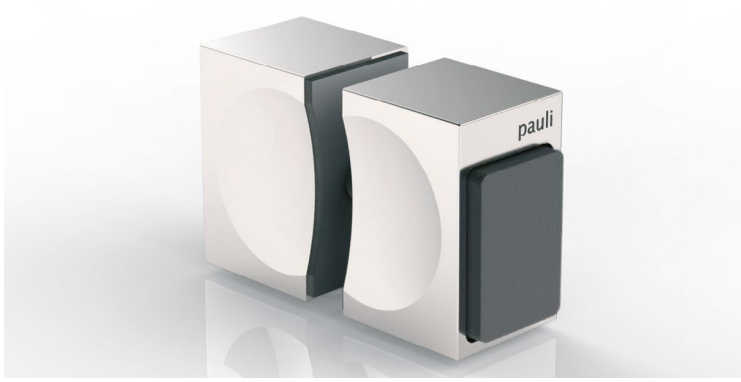



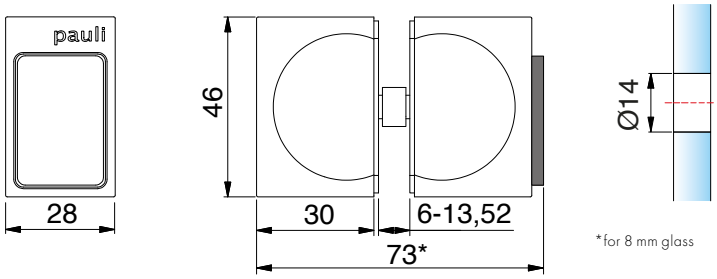

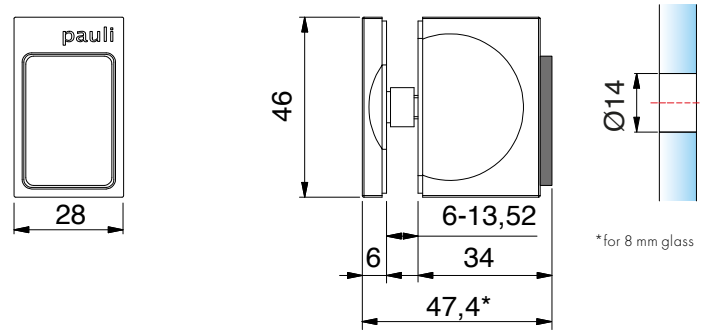

Glass door knob, double-sided, with rubber stop on one side

article no	glass thickness
8273__	6-13,52 mm

finish

	ZN5	gloss chrome
	ZN5-A	gloss chrome
	ZN1	matt chrome
	ZN10-A*	gloss nickel
	ZNPVD20	gold optic
	ZNPVD20-A*	gold optic
	ZNPVD22	stainless steel optic
	ZNPVD35*	black matt
	ZN134	white matt
	ZN135	deep black matt
	ZNPVD39	gold bronze brushed
	ZNPVD40	gold optic brushed
	ZNPVD41	copper optic brushed
	ZNPVD42	graphite metal optic brushed

Glass door knob, one-sided, with rubber stop on one side

article no	glass thickness
8271__	6-13,52 mm

finish

	ZN5	gloss chrome
	ZN5-A	gloss chrome
	ZN1	matt chrome
	ZN10-A*	gloss nickel
	ZNPVD20	gold optic
	ZNPVD20-A*	gold optic
	ZNPVD22	stainless steel optic
	ZNPVD35*	black matt
	ZN134	white matt
	ZN135	deep black matt
	ZNPVD39	gold bronze brushed
	ZNPVD40	gold optic brushed
	ZNPVD41	copper optic brushed
	ZNPVD42	graphite metal optic brushed

A = without logo
*article discontinued

angular handles

MADE IN GERMANY

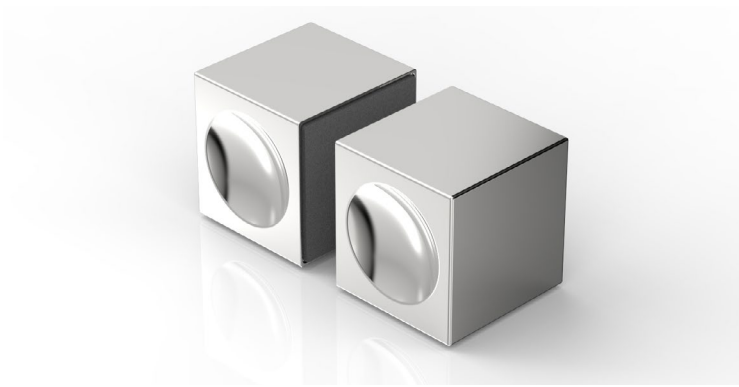

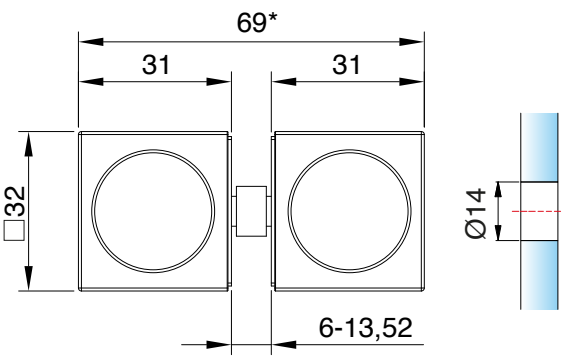

*for 8 mm glass

glass door knob double sided		
article no.		glass thickness
8822__-MGH		6 - 13,52 mm
finish		
	ZN5	gloss chrome
	ZN1*	matt chrome
	ZNPVD22*	stainless steel optic
	ZN135	deep black matt

*article discontinued

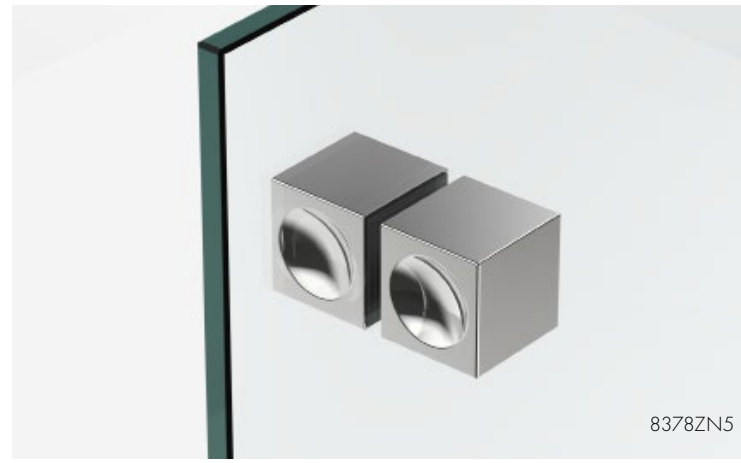

8378ZN5

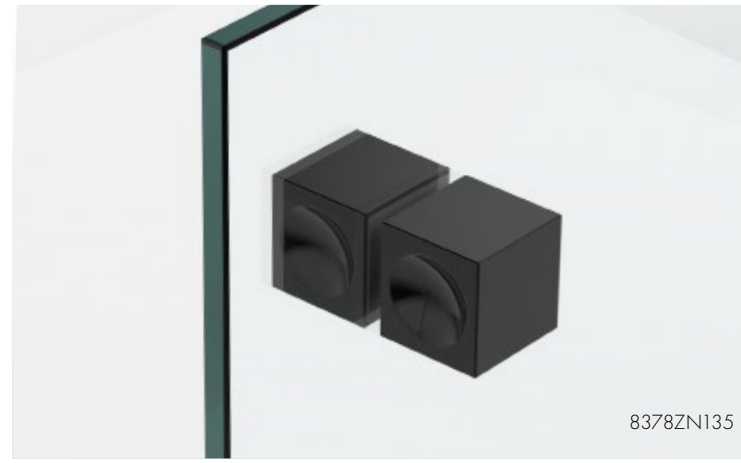

8378ZN135



8691ZNPVD39

ACCESSORIES

angular handles

MADE IN GERMANY

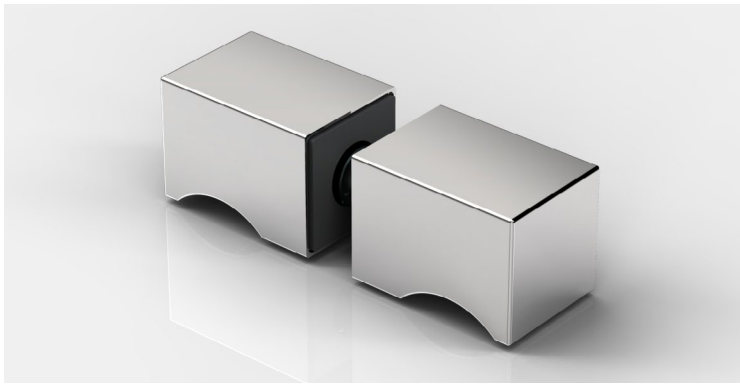



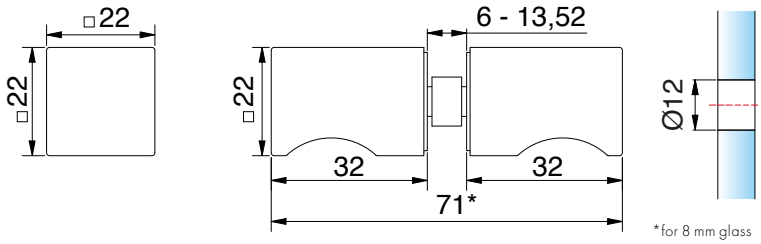

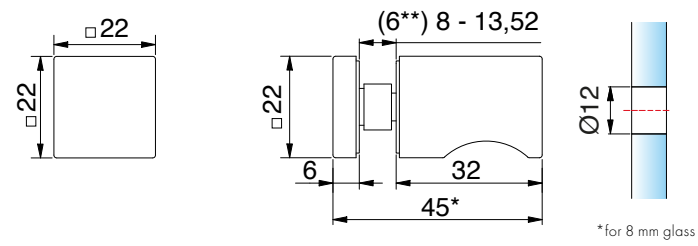

glass door knob double sided		
article no.		glass thickness
8691_		6-13,52 mm
finish		
ZN5	gloss chrome	
ZN1	matt chrome	
ZNPVD20	gold optic	
ZNPVD22	stainless steel optic	
ZN135	tiefschwarz matt	
ZNPVD39	gold bronze brushed	
ZNPVD40	gold optic brushed	
ZNPVD41	copper optic brushed	
ZNPVD42	graphite metal optic brushed	

glass door knob one sided		
article no.		glass thickness
8692_		(6**) 8-13,52 mm
finish		
ZN5	gloss chrome	
ZN1	matt chrome	
ZNPVD20	gold optic	
ZNPVD22	stainless steel optic	
ZN135	tiefschwarz matt	
ZNPVD39	gold bronze brushed	
ZNPVD40	gold optic brushed	
ZNPVD41	copper optic brushed	
ZNPVD42	graphite metal optic brushed	

**The HZ insert (item no. 8274-4HZ) replaces the HZ insert (item no. 8274-2HZ) when used with ESG-6. The HZ insert 8274-4HZ must be ordered separately for ESG-6.

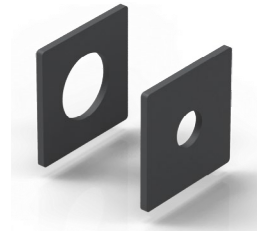

article no.	product description
8274-4HZ	HZ insert for 6mm glass (square)

ACCESSORIES

angular handles

MADE IN GERMANY





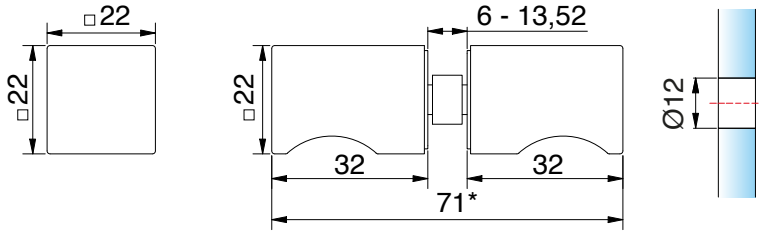

*for 8 mm glass

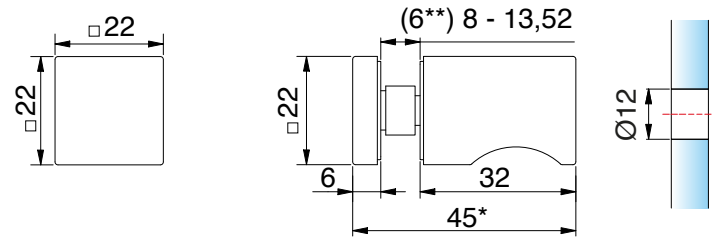

*for 8 mm glass

glass door knob double sided		
article no.		glass thickness
8691_-M1		6-13,52 mm
finish		
ZN5	gloss chrome	
ZN135	deep black matt	

glass door knob one sided		
article no.		glass thickness
8692_-M1		(6**) 8-13,52 mm
finish		
ZN5	gloss chrome	
ZN135	deep black matt	

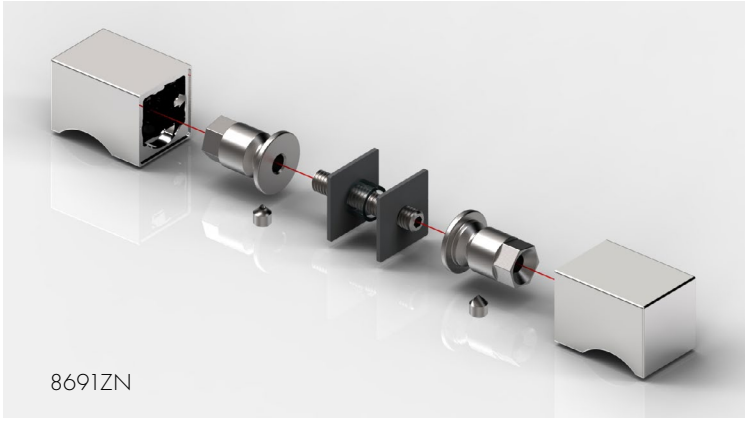

8691ZN

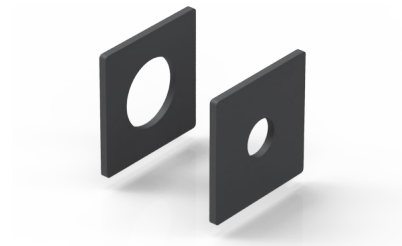

article no.	product description
8274-4HZ	HZ insert for 6mm glass (square)

**The HZ insert (item no. 8274-4HZ) replaces the HZ insert (item no. 8274-2HZ) when used with ESG-6. The HZ insert 8274-4HZ must be ordered separately for ESG-6.

angular handles, flush on one side

MADE IN GERMANY





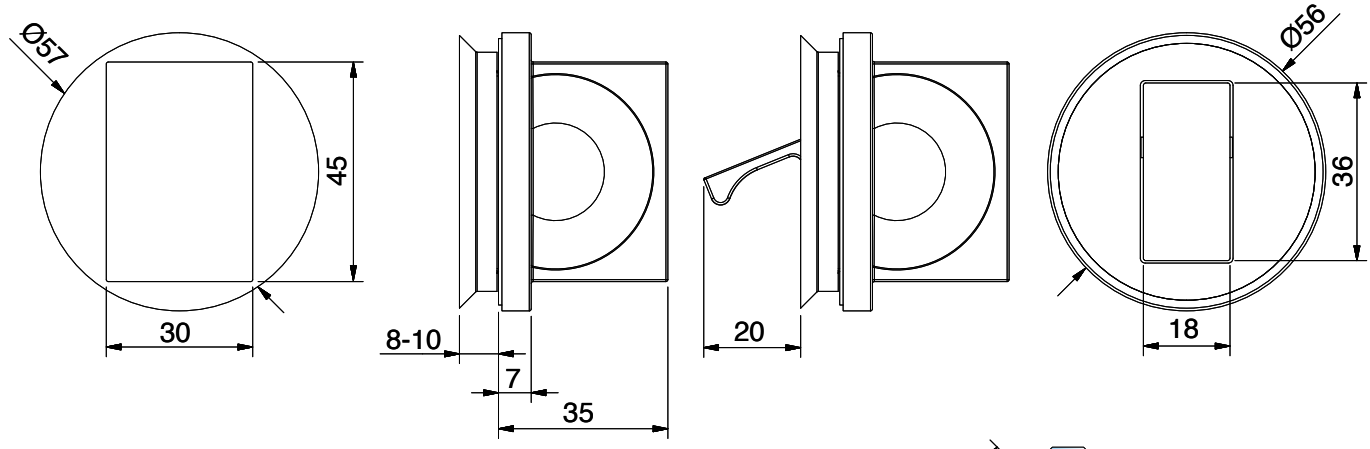

glass door knob double sided, flush with pull flap



article no.	glass thickness
8379__	6-13,52 mm

finish		
	ZN5	gloss chrome
	ZN1*	matt chrome
	ZNPVD22	stainless steel optic
	ZNPVD35*	black matt
	ZN134	white matt
	ZN135	deep black matt
	ZNPVD39	gold bronze brushed
	ZNPVD40	gold optic brushed
	ZNPVD41	copper optic brushed
	ZNPVD42	graphite metal optic brushed

*article discontinued

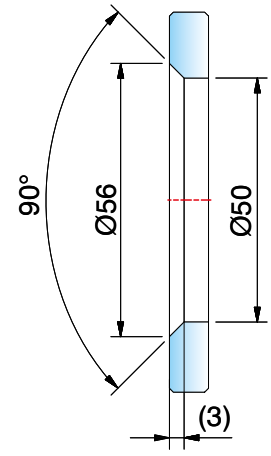

handles for sliding doors

MADE IN GERMANY



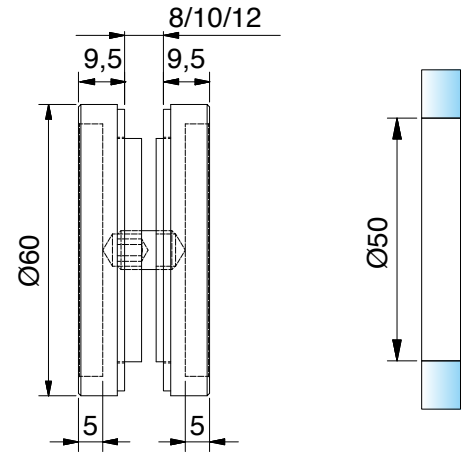

recess knob closed Ø 60 mm, raised 9,5 mm

article no.	glass thickness
8514__	8-12 mm

1/1

finis	
MS7	gloss chrome
VA	stainless steel
VA135	deep black matt

handles for sliding doors

MADE IN GERMANY



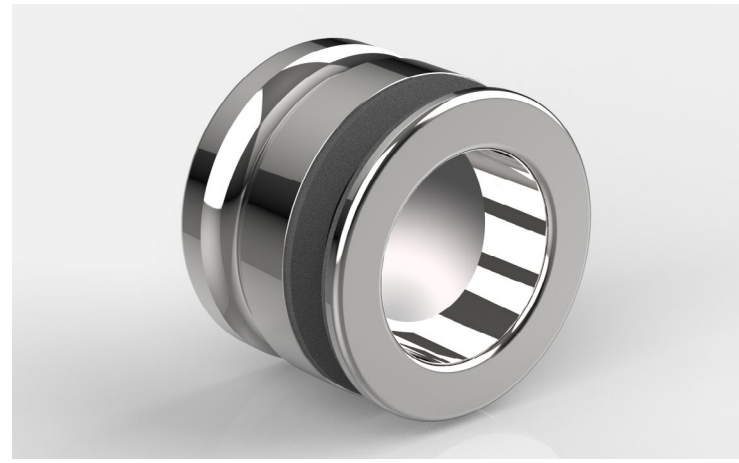

Inner side with a recessed handle

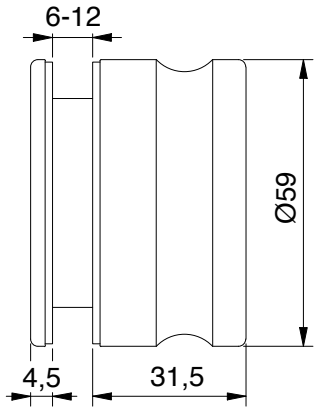

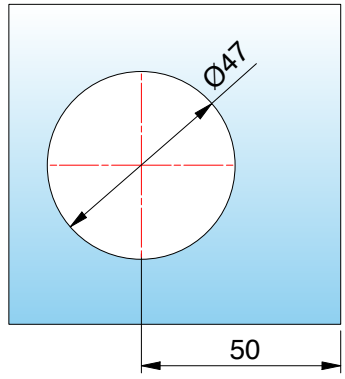

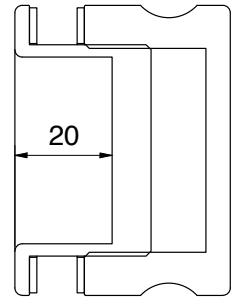

knob double-sided threaded		
article no.	glass thickness	1/1
8822VA-MGE	6-12 mm	
Oberfläche		
VA	stainless stell	

ACCESSORIES

handles for sliding doors

MADE IN GERMANY



handles for sliding doors

MADE IN GERMANY



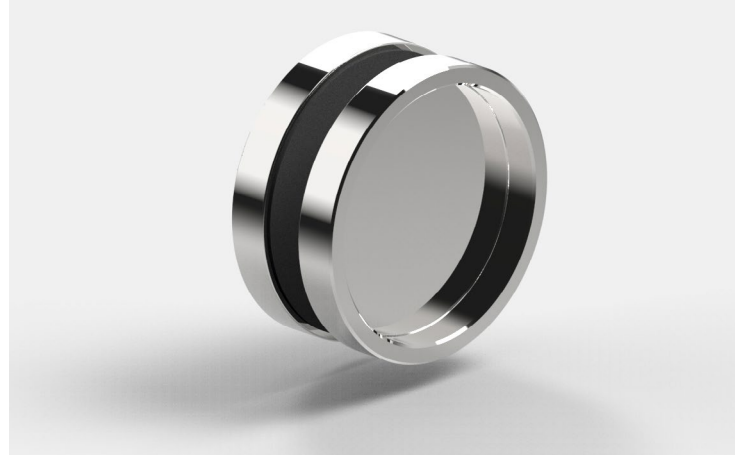

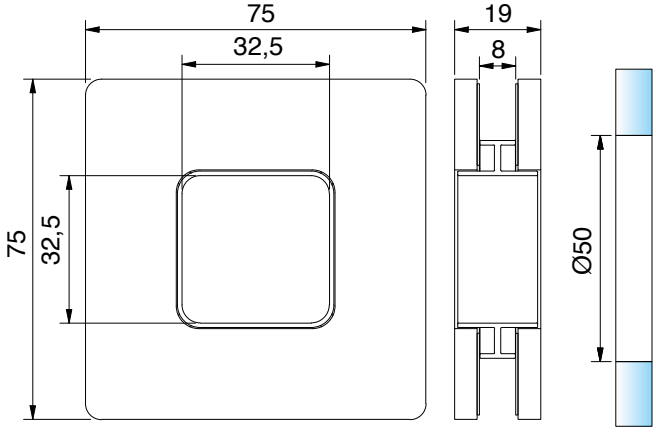

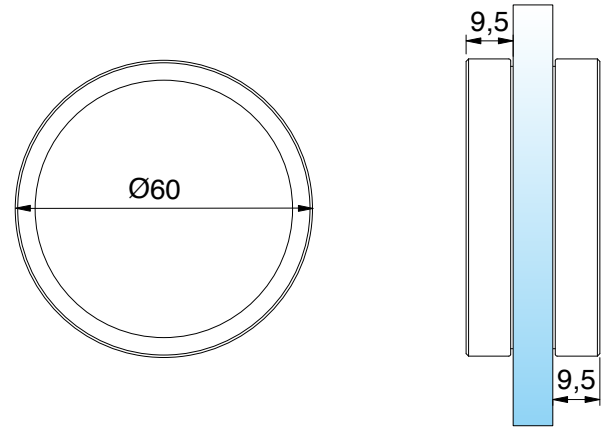

recess knob, open, self-adhesive, Ø 50 mm, raised, 5,5 mm		
article no.		glass thickness
8371__		8 mm
finish		
MS7	gloss chrome	
MS10	matt chrome	
MSPVD22	stainless steel optic	
MSPVD35	black matt	

recess knob, open, self-adhesive		
article no.		glass thickness
8822__-MG		6-13,52 mm
finish		
MS7	gloss chrome	
E6EV1	aluminium optik	
MSPVD35	black matt	
VA	stainless steel	

note:
Coated glass panes must not be used in combination with adhesive handles. Before applying the handles, the glass panes must be cleaned with a residue-free degreasing agent (not methylated spirits). Once the handles have been applied, press them firmly into place (for at least 20 minutes), e.g. using a clamp.

handles for sliding doors

MADE IN GERMANY

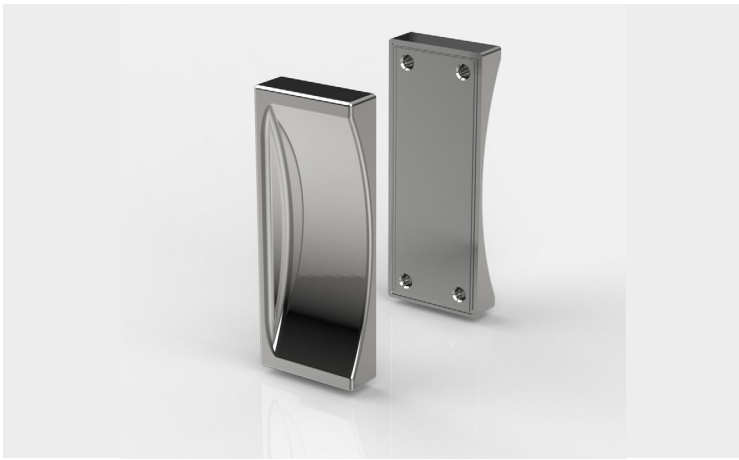



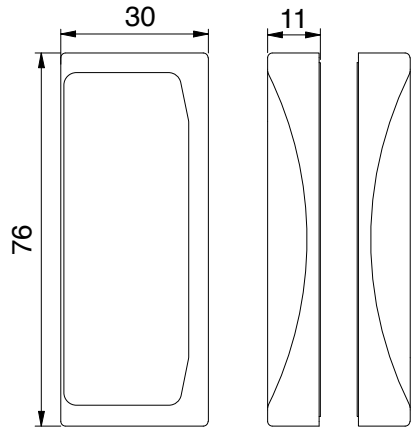

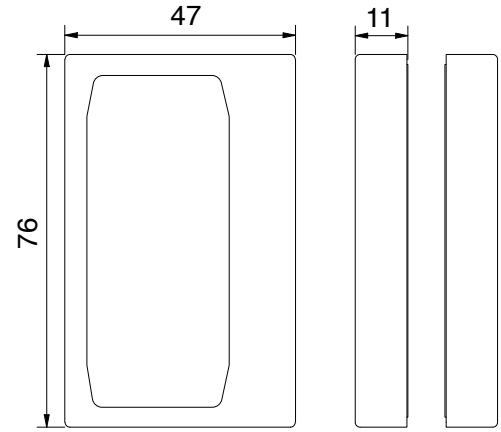

glass door handle, double-sided, self-adhesive		
article no	glass thickness	
8822__-MGH	6-13,52 mm	

finish		
	ZN5	gloss chrome
	ZN1*	matt chrome
	ZNPVD20*	gold optic
	ZNPVD22*	stainless steel optic
	ZN135	deep black matt

glass door handle, double-sided, self-adhesive		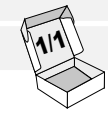
article no	glass thickness	
8822__-MGV	6-13,52 mm	

finish		
	ZN5	gloss chrome
	ZN1*	matt chrome
	ZNPVD20*	gold optic
	ZNPVD22*	stainless steel optic
	ZN135	deep black matt

*article discontinued

note:
Coated glass panes must not be used in combination with adhesive handles. Before applying the handles, the glass panes must be cleaned with a residue-free degreasing agent (not methylated spirits). Once the handles have been applied, press them firmly into place (for at least 20 minutes), e.g. using a clamp.

handles for sliding doors

MADE IN GERMANY

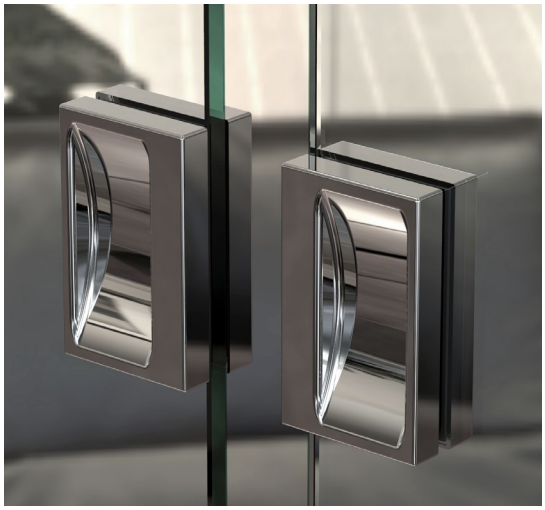

8822ZN5-MGV gloss chrome

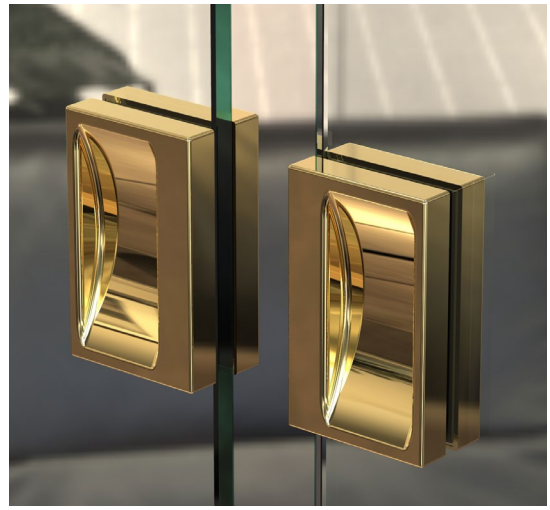

8822ZNPVD20-MGV gold optic

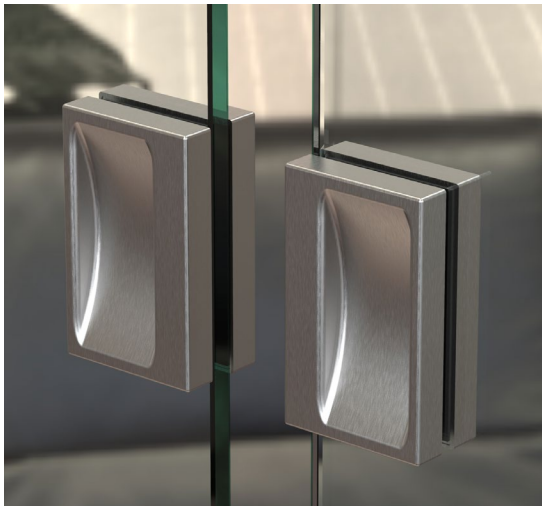

8822ZNPVD22-MGV stainless steel optic

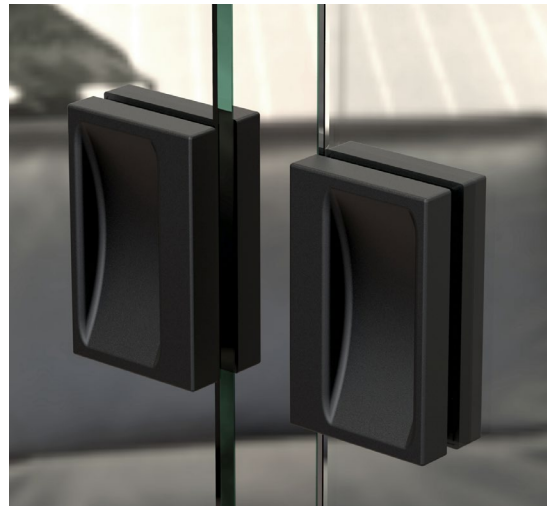

8822ZN135-MGV deep black matt

bar handles for sliding doors

MADE IN GERMANY



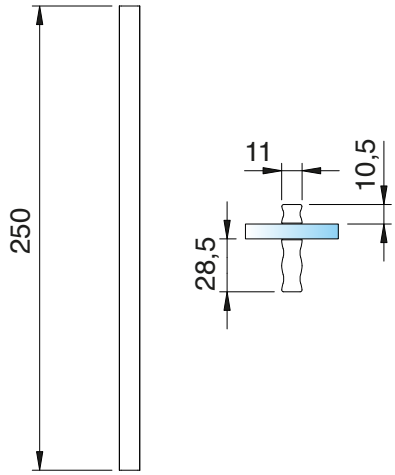

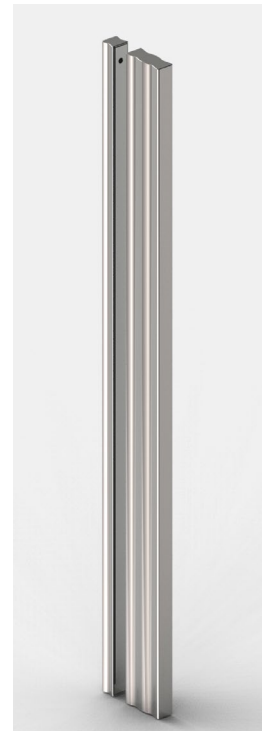

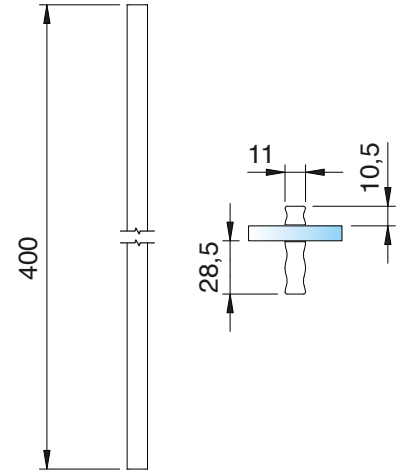

bar handle, self-adhesive			
article no		glass thickness	
8822MS__-SG-250		6-13,52 mm	
finish			
	MS7	gloss chrome	
	MSPVD35	black matt	

bar handle, self-adhesive			
article no		glass thickness	
8822MS__-SG-400		6-13,52 mm	
finish			
	MS7	gloss chrome	
	MSPVD35	black matt	

note:
Coated glass panes must not be used in combination with adhesive handles. Before applying the handles, the glass panes must be cleaned with a residue-free degreasing agent (not methylated spirits). Once the handles have been applied, press them firmly into place (for at least 20 minutes), e.g. using a clamp.

bar handles

MADE IN GERMANY



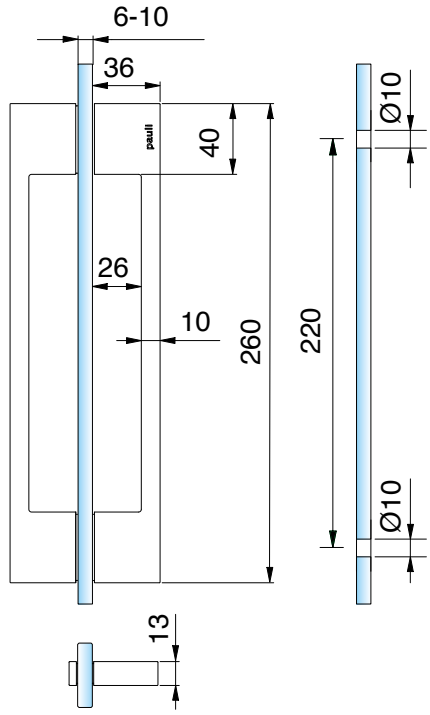

glass door handle, double-sided

article no	glass thickness
8277_	6-10 mm

finish		
	ZN5	gloss chrome
	ZN5-A	gloss chrome
	ZN1	matt chrome
	ZN1-A*	matt chrome
	ZN10*	gloss nickel
	ZNPVD20	gold optic
	ZNPVD22	stainless steel optic
	ZNPVD22-A*	stainless steel optic
	ZN134	white matt
	ZN135	deep black matt
	ZN135-A	deep black matt
	ZNPVD39	gold bronze brushed
	ZNPVD40	gold optic brushed
	ZNPVD41	copper optic brushed
	ZNPVD42	graphite metal optic brushed

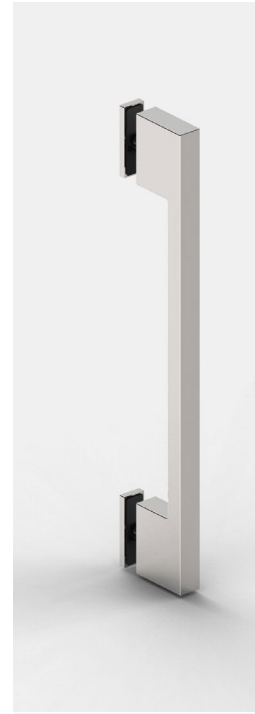

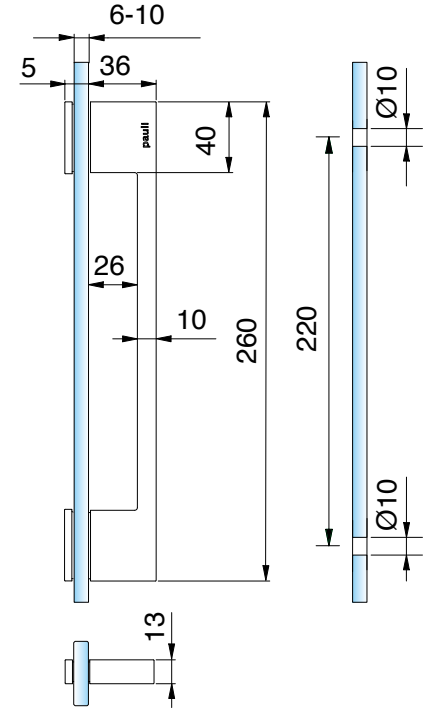

glass door handle, one-sided

article no	glass thickness
8276_	6-10 mm

finish		
	ZN5	gloss chrome
	ZN5-A*	gloss chrome
	ZN1*	matt chrome
	ZNPVD22	stainless steel optic

A = without logo
*article discontinued

bar handles

MADE IN GERMANY

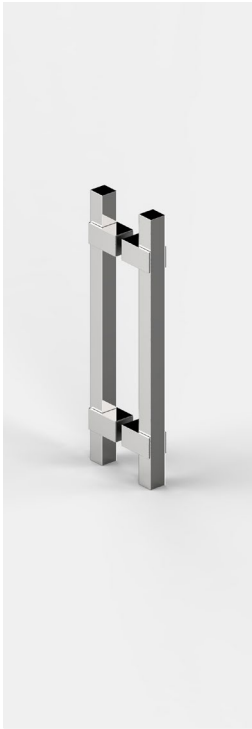

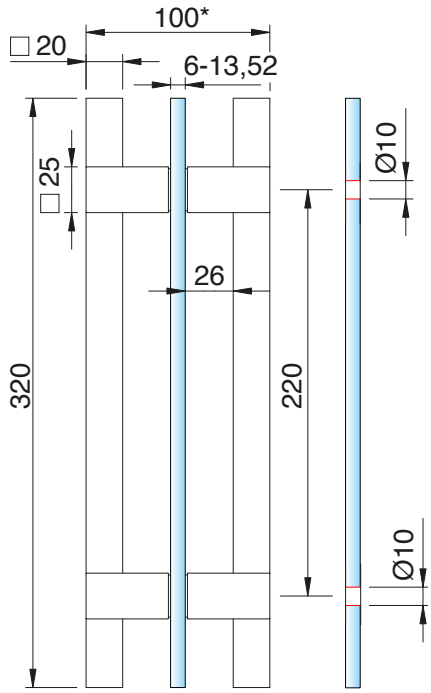

glass door handle, double-sided, length: 320 mm

article no	glass thickness
8370__-320	6-13,52 mm

finish

		holder (ZN)	tube (aluminium)
	ZN5	gloss chrome	aluminium gloss chrome
	ZN1*	matt chrome	aluminum aluminum optic anodized
	ZNPVD22	stainless steel optic	aluminum stainless steel optic anodized
	ZN135	deep black matt	aluminum black anodized

*article discontinued

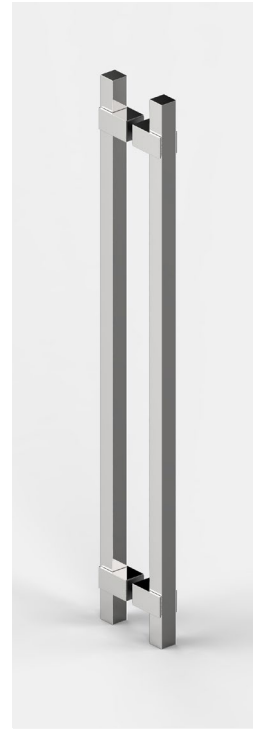

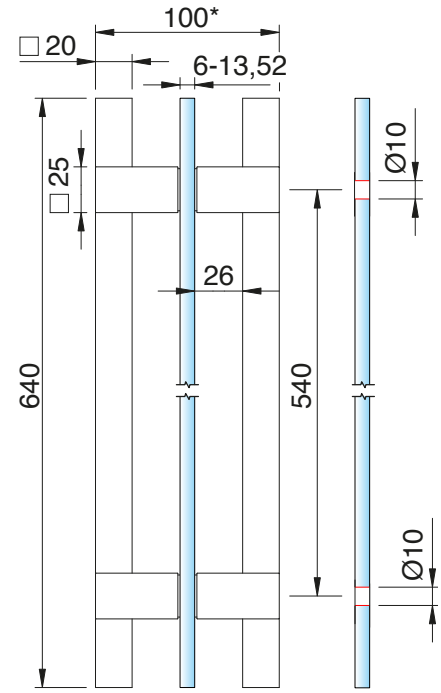

glass door handle, double-sided, length: 640 mm

article no	glass thickness
8370__-640	6-13,52 mm

finish

		holder (ZN)	tube (aluminium)
	ZN1*	matt chrome	aluminum aluminum optic anodized
	ZNPVD22	stainless steel optic	aluminum stainless steel optic anodized
	ZN135	deep black matt	aluminum black anodized

bar handles

MADE IN GERMANY





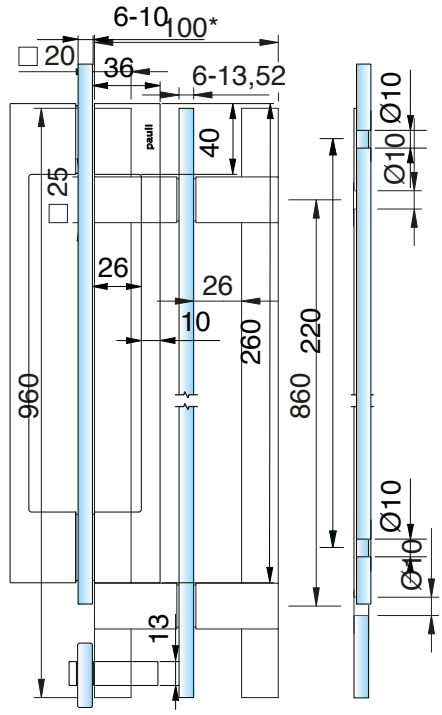

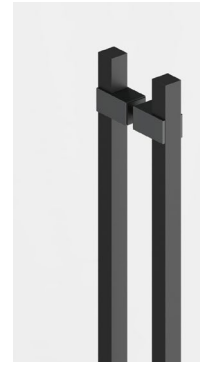



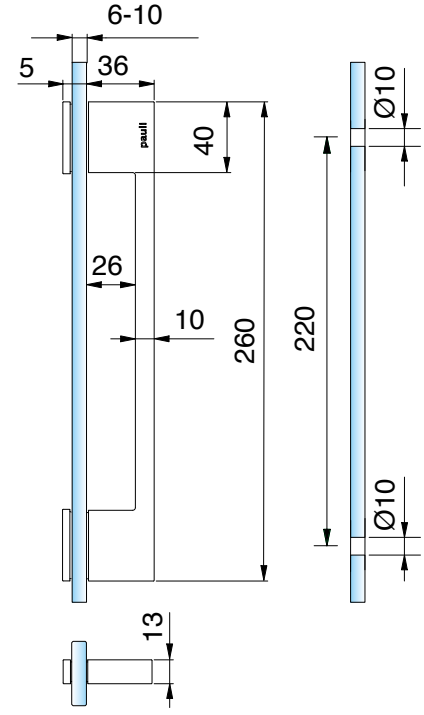

glass door handle, double-sided, length: 960 mm

article no	glass thickness
8370__-960	6-13,52 mm



finish

	holder (ZN)	tube (aluminium)
ZN1*	matt chrome	aluminum aluminum optic anodized
ZNPVD22*	stainless steel optic	aluminum stainless steel optic anodized
ZN135*	deep black matt	aluminum black anodized

*article discontinued

sauna bar handles

MADE IN GERMANY



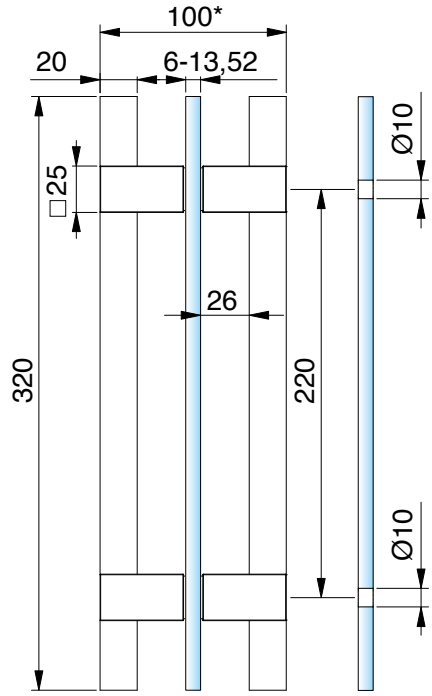



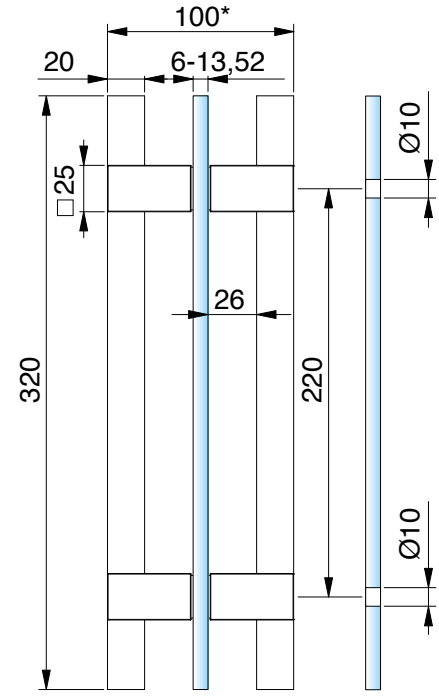

geeignet für Saunen SN

glass door handle for sauna, double-sided			
article no		glass thickness	1/1
8373ZN__-HEM		6-13,52 mm	
finish			
	ZN5	gloss chrome/ wood (hemlock)	
	ZN1	matt chrome/ wood (hemlock)	
	ZN10	gloss nickel/ wood (hemlock)	
	ZNPVD20	gold optic/ wood (hemlock)	
	ZNPVD22	stainless steel optic/ wood (hemlock)	
	ZN135	deep black matt/ wood (hemlock)	

glass door handle for sauna, double-sided			
article no		glass thickness	1/1
8372ZN__-HEM		6-13,52 mm	
finish			
	ZN5	gloss chrome/ wood (hemlock)	
	ZNPVD22	stainless steel optic/ wood (hemlock)	
	ZN135	deep black matt/ wood (hemlock)	

stainless steel bar handles

MADE IN GERMANY



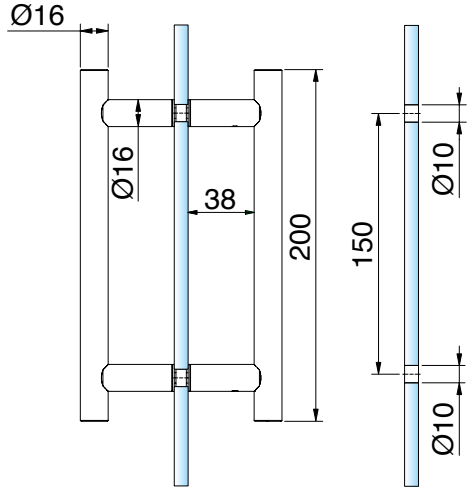

door handle, double-sided

article no	glass thickness
8060__-200	6-10 mm



finish

	VA	stainless steel
	VA1	stainless steel polished



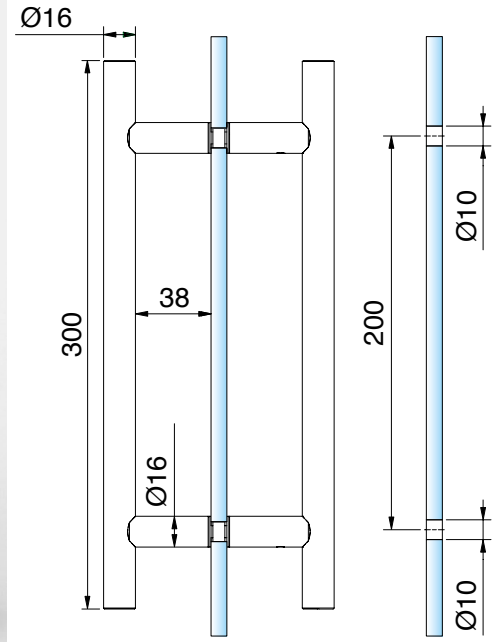

door handle, double-sided

article no	glass thickness
8060__-300	6-10 mm



finish

	VA	stainless steel
	VA1	stainless steel polished

stainless steel bar handles

MADE IN GERMANY



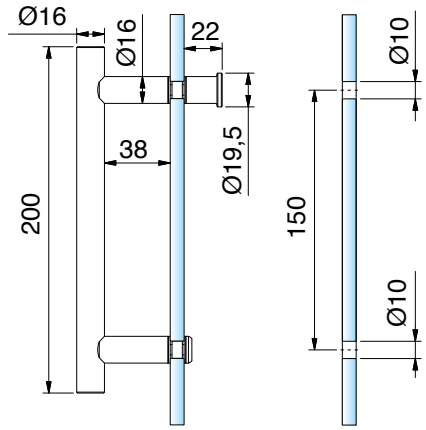

door handle single sided raised head, with handle piece

article no	glass thickness
8065__-200	6-10 mm

1/1

finish

	VA	stainless steel
	VA1	stainless steel polished



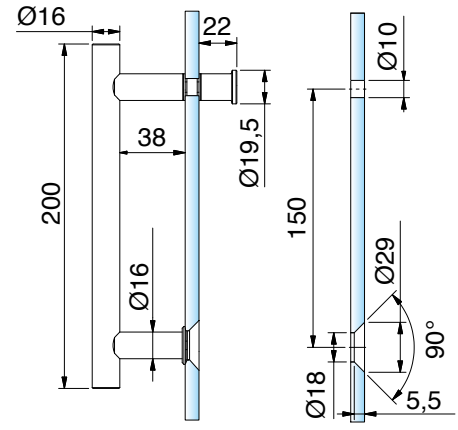

door handle single sided flush, with handle piece

article no	glass thickness
8066__-200	6-10 mm

1/1

finish

	VA	stainless steel
	VA1	stainless steel polished

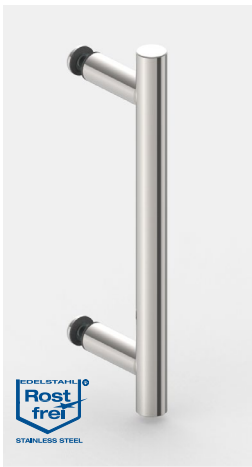

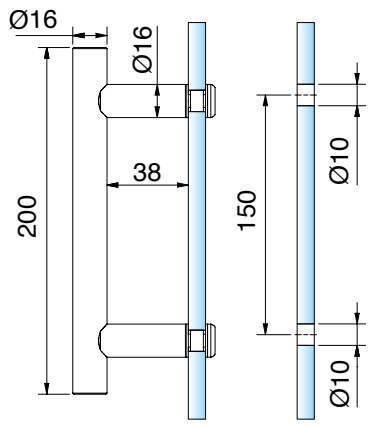

door handle single sided raised head

article no	glass thickness
8061__-200	6-10 mm

1/1

finish

	VA	stainless steel
	VA1	stainless steel polished

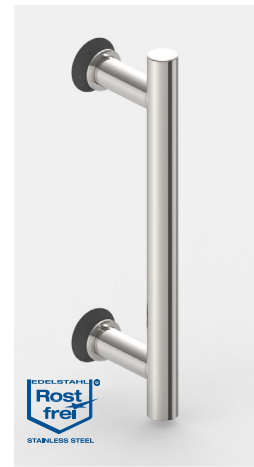

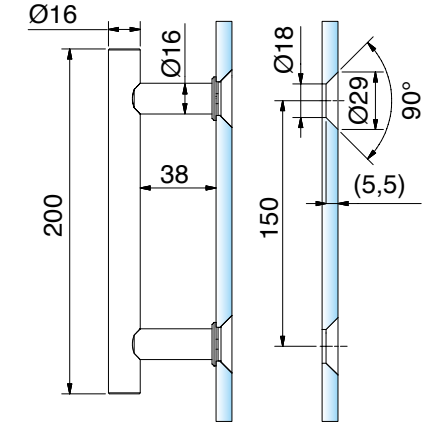

door handle single sided, flush

article no	glass thickness
8062__-200	6-10 mm

1/1

finish

	VA	stainless steel
	VA1	stainless steel polished

ACCESSORIES

stainless steel bar handles

MADE IN GERMANY



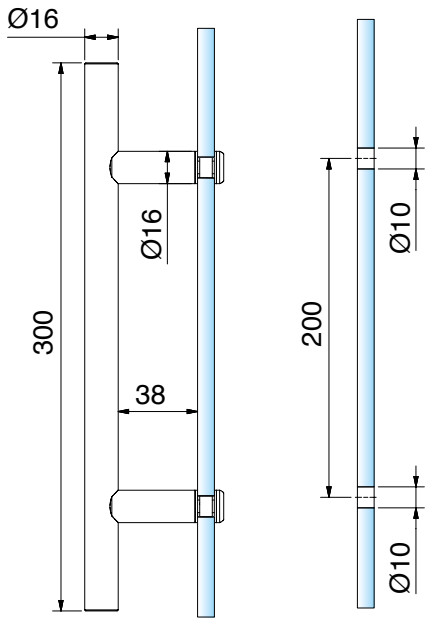

door handle single sided raised head

article no	glass thickness
8061__-300	6-10 mm

1/1

finish	
VA	stainless steel
VA1	stainless steel polished

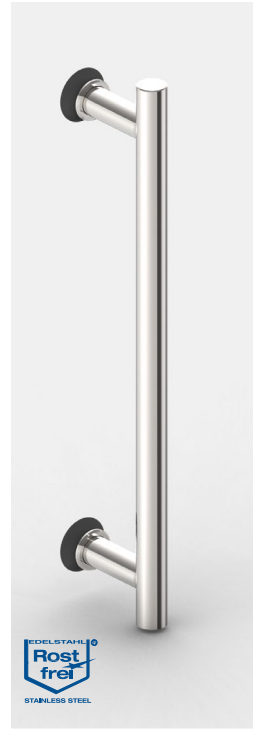

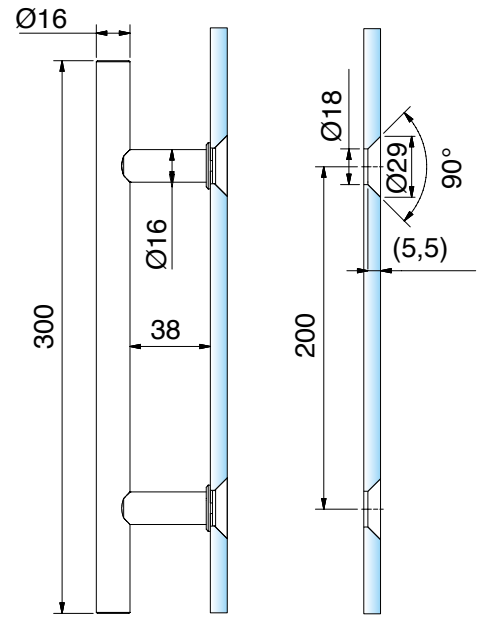

door handle single sided, flush

article no	glass thickness
8062__-300	6-10 mm

1/1

finish	
VA	stainless steel
VA1	stainless steel polished

Towel holder sets, round

MADE IN GERMANY



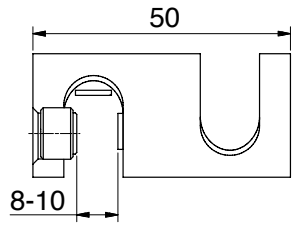

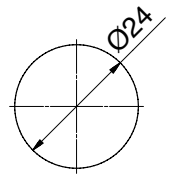

towel holder, mounted onto the glassedge, no glass processing necessary

article no	glass thickness
8696MS	8-10 mm



finish	
MS7	gloss chrome
MS10*	matt chrome
MSPVD22	stainless steel optic

*article discontinued





towel bar for glass, raised head, length variable up to 1000 mm

article no	glass thickness
8063__-V	6-10 mm



finish	
VA	stainless steel
VA1	stainless steel polished

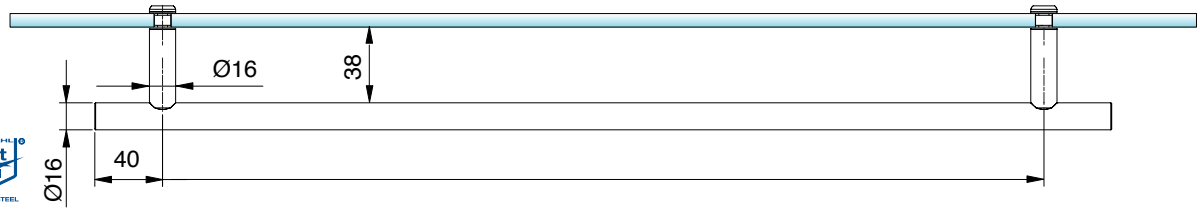

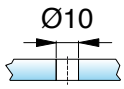

Please state the centre-to-centre distance when ordering!
Longer lengths available on request.

Towel holder sets, round

MADE IN GERMANY



towel bar for glass, raised point fixture, 1000 mm in length

article no	glass thickness
8686ZN__-1000	8-13,52 mm

finish

ZN5	gloss chrome
ZN135	deep black matt

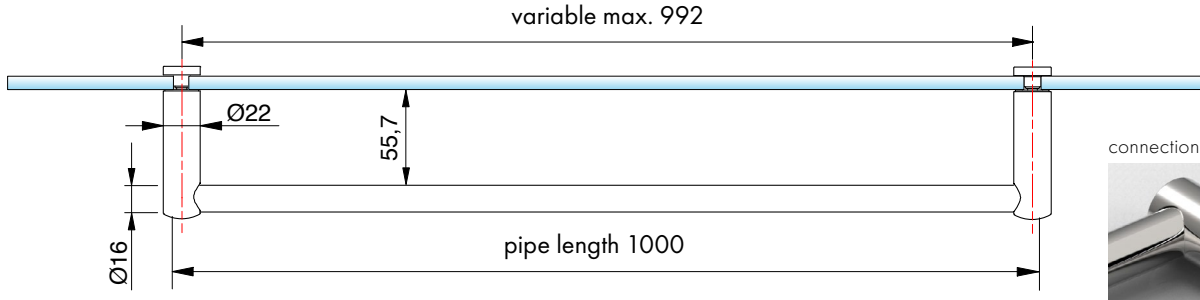

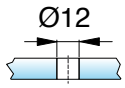

connection in detail





towel bar for glass, flush point fixture, up to 1000 mm length

article no	glass thickness
8683ZN__-1000	8-13,52 mm

finish

ZN5	gloss chrome
ZN135	deep black matt

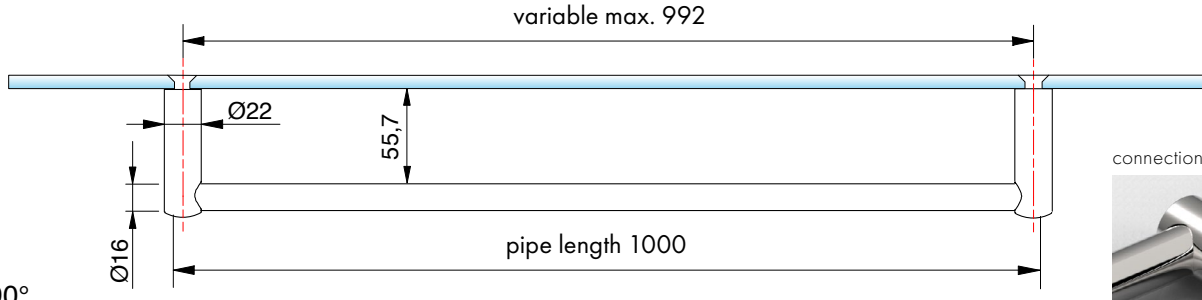

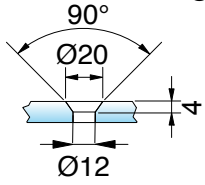

connection in detail



Towel holder, round - Tube for towel holder 8686

MADE IN GERMANY

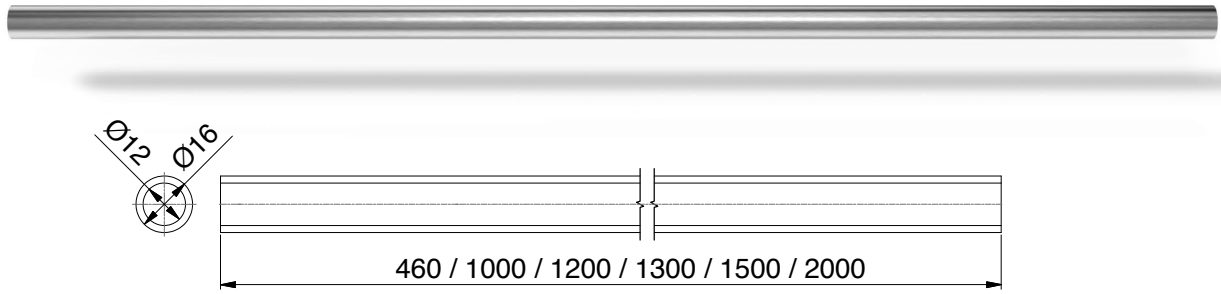

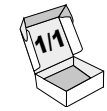

combination for towel holder 8686



	Art.-Nr.	Oberfläche	Länge
	8444-1E123-460	stainless steel optic	460 mm
	8444-1E123-1000	stainless steel optic	1000 mm
	8444-1E123-1500	stainless steel optic	1500 mm
	8444-1E123-2000	stainless steel optic	2000 mm
	8444-1E6EV5-460	pickled aluminum polished and anodized	460 mm
	8444-1E6EV5-1000	pickled aluminum polished and anodized	1000 mm
	8444-1E6EV5-1500	pickled aluminum polished and anodized	1500 mm
	8444-1E6EV5-2000	pickled aluminum polished and anodized	2000 mm
	8444-1E6EV1-1000	aluminum optic (anodised silver)	1000 mm
	8444-1E6EV1-1500	aluminum optic (anodised silver)	1500 mm
	8444-1E6EV1-2000	aluminum optic (anodised silver)	2000 mm
	8444-1MS7-1300	gloss chrome	1300 mm
	8444-1E6C35-1000	deep black matt	1000 mm
	8444-1E6C35-1500	deep black matt	1500 mm
	8444-1E6C35-2000	deep black matt	2000 mm
	8744-1VAPVD39-1200	gold bronze brushed	1200 mm
	8744-1VAPVD40-1200	gold optic brushed	1200 mm
	8744-1VAPVD41-1200	copper optic brushed	1200 mm
	8744-1VAPVD42-1200	graphite-metal optic brushed	1200 mm





article no	article description
Z102	Screw 5x80mm TX25 with dowel 8x50 for wall mounting the towel holder 8686/8688



Towel holder, round

MADE IN GERMANY



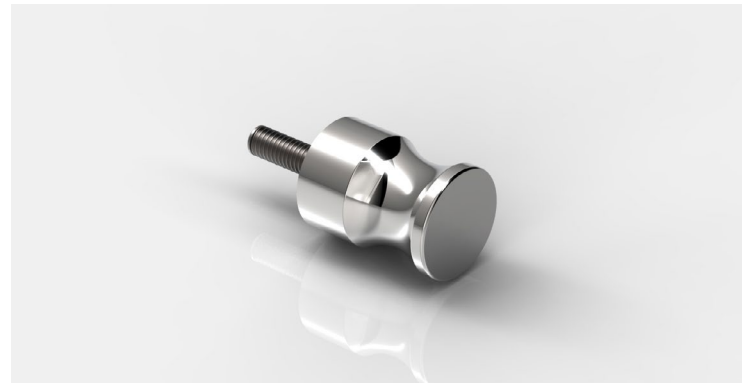

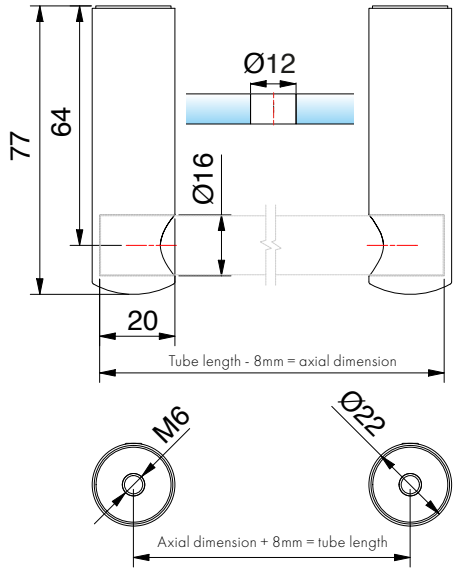

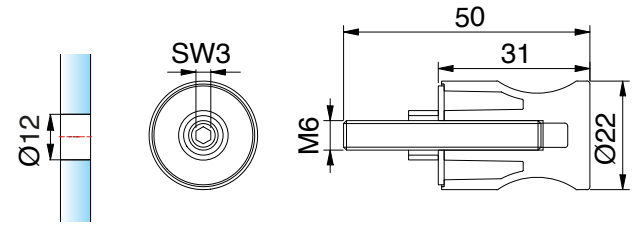



exterior parts, left and right, for towel support bars, round

article no	glass thickness
8686__-AT	6 - 13,52 mm

finish

	ZN5	gloss chrome
	ZN1*	matt chrome
	ZNPVD22	stainless steel optic
	ZN135	deep black matt
	ZN134*	white matt

handle for towel support bars, round

article no	glass thickness
8686__-GS	6 - 13,52 mm

finish

	ZN5	gloss chrome
	ZN1*	matt chrome
	ZNPVD22	stainless steel optic
	ZN135	deep black matt
	ZN134*	white matt

*article discontinued

Towel holder, round

MADE IN GERMANY





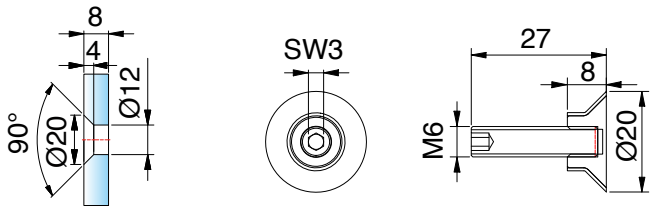

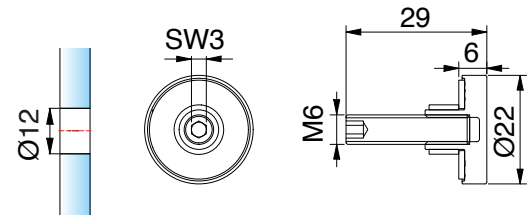



flush point fixture for towel support bars

article no	glass thickness
8686VA-F**	8-13,52 mm

finish

	VA	stainless steel
	ZNPVD20	gold optic
	ZNPVD35	black matt

*article discontinued

****note:** 8686VA-F (stainless steel) can be combined with gloss chrome (ZN5), matt chrome (ZN1) and stainless steel look (ZNPVD22).



raised point fixture for towel support bars, round

article no	glass thickness
8686__-E	6-13,52 mm

finish

	ZN5	gloss chrome
	ZN1*	matt chrome
	ZNPVD22	stainless steel optic
	ZN134*	white matt
	ZN135	deep black matt

Towel holder sets, square

MADE IN GERMANY

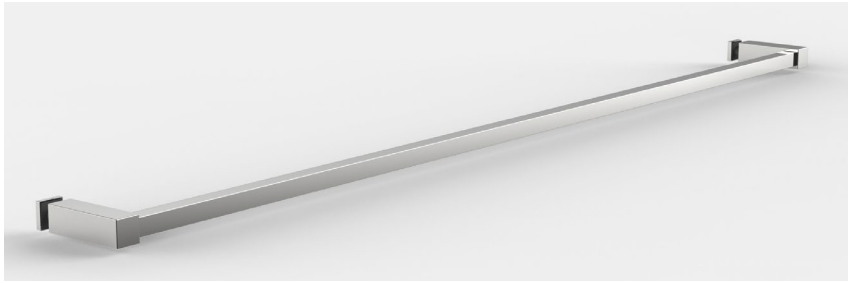

towel bar for glass, raised point fixture, 1000 mm in length	
article no	glass thickness
8688ZN__-1000	8-13,52 mm

1/1

finish	
ZN5	gloss chrome
ZN135	deep black matt

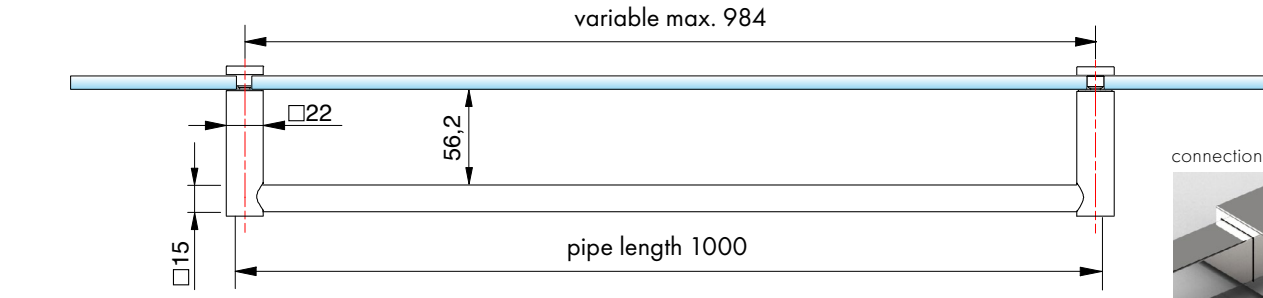

connection in detail

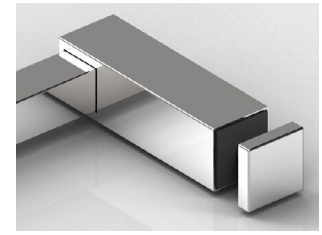

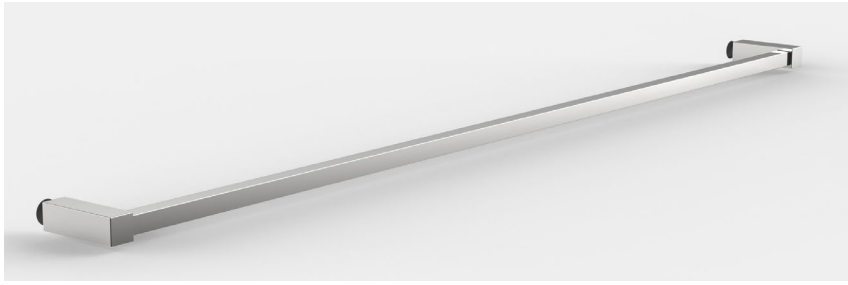

towel bar for glass, flush point fixture, up to 1000 mm length	
article no	glass thickness
8684ZN__-1000	8-13,52 mm

1/1

finish	
ZN5	gloss chrome
ZN135	deep black matt

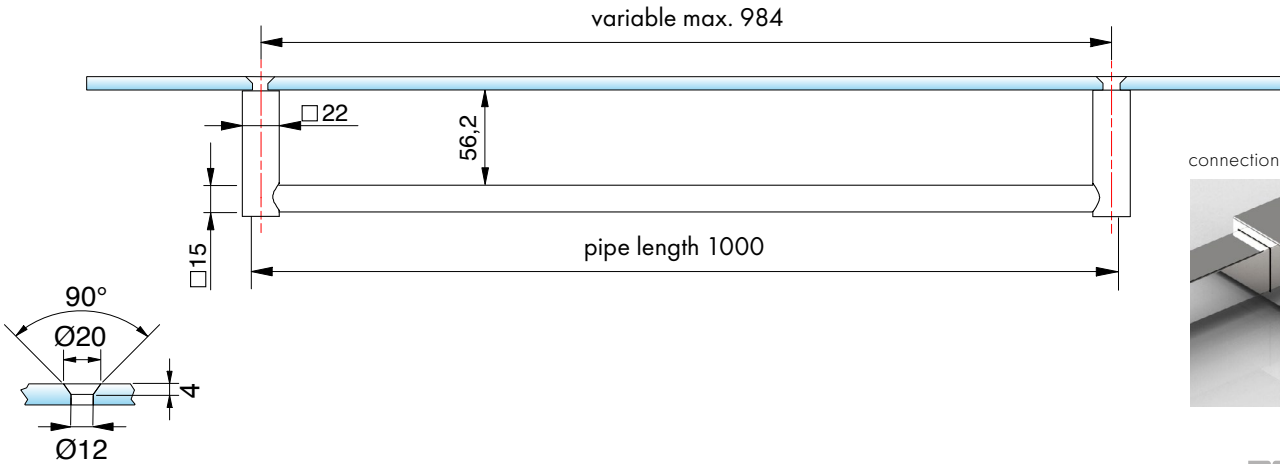

connection in detail

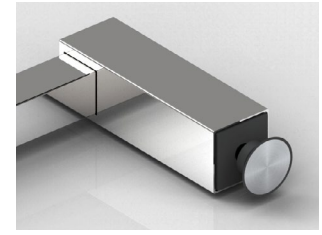

Towel holder, square - Tube for towel holder 8686

MADE IN GERMANY



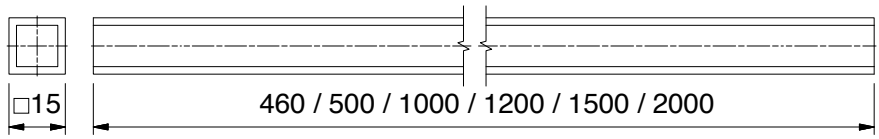

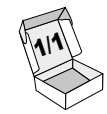

combination for towel support bar 8688

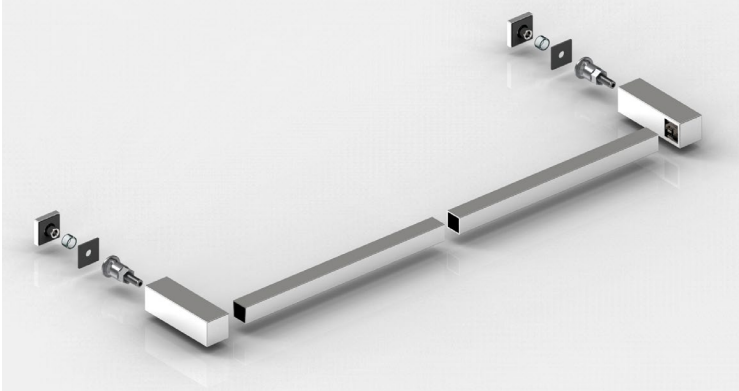

	article no.	finish	length
	8688-5E6EV5-460	pickled aluminum polished and anodized	460 mm
	8688-5E6EV5-1000	pickled aluminum polished and anodized	1000 mm
	8688-5E6EV5-1500	pickled aluminum polished and anodized	1500 mm
	8688-5E6EV5-2000	Aluminium-spezialgebeizt-glanzeloxiert	2000 mm
	8688-5E6EV1-1000	aluminum optic (anodised silver)	1000 mm
	8688-5E6EV1-1500	aluminum optic (anodised silver)	1500 mm
	8688-5E6EV1-2000	aluminum optic (anodised silver)	2000 mm
	8688-5MS7-1300	gloss chrome	1300 mm
	8688-5MSPVD20-500	gold optic	500 mm
	8688-5MSPVD20-1000	gold optic	1000 mm
	8688-5MS5-500	gloss nickel	500 mm
	8688-5MS5-1000	gloss nickel	1000 mm
	8688-5E123-460	stainless steel optic	460 mm
	8688-5E123-1000	stainless steel optic	1000 mm
	8688-5E123-1500	stainless steel optic	1500 mm
	8688-5E123-2000	stainless steel optic	2000 mm
	8688-5E6C35-1000	deep black matt	1000 mm
	8688-5E6C35-1500	deep black matt	1500 mm
	8688-5E6C35-2000	deep black matt	2000 mm
	8688-5AL134-1500	white matt	1500 mm
	8688-5VAPVD39-1200	gold bronze brushed	1200 mm
	8688-5VAPVD40-1200	gold optic brushed	1200 mm
	8688-5VAPVD41-1200	copper optic brushed	1200 mm
	8688-5VAPVD42-1200	graphite metal optic brushed	1200 mm



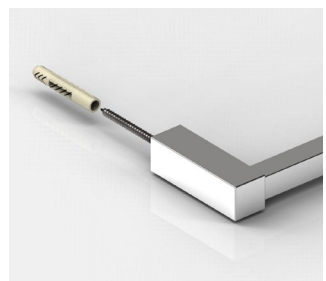

article no.	article description
Z102	screw 5x80mm TX25 with dowel 8x50 for wall mounting the towel holder 8686/8688



Towel holder, square

MADE IN GERMANY



Towel holder, square

MADE IN GERMANY

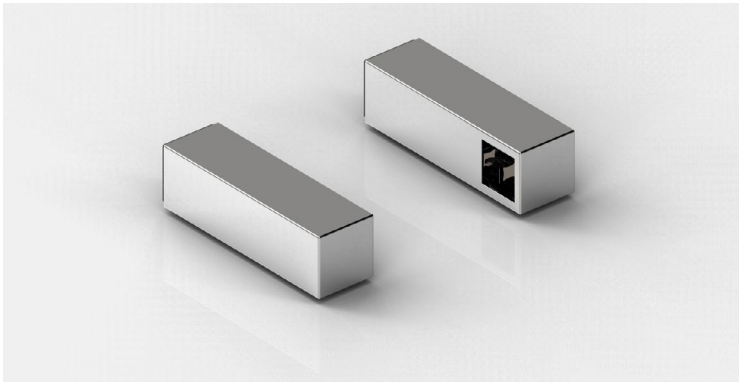



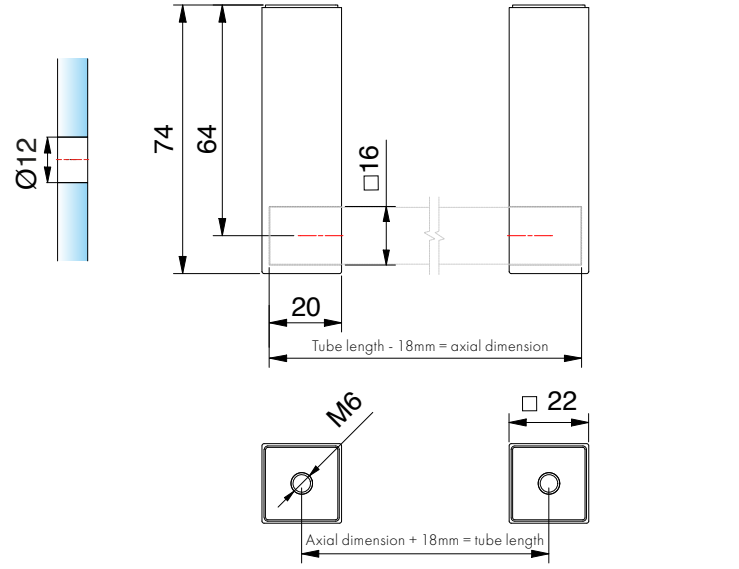

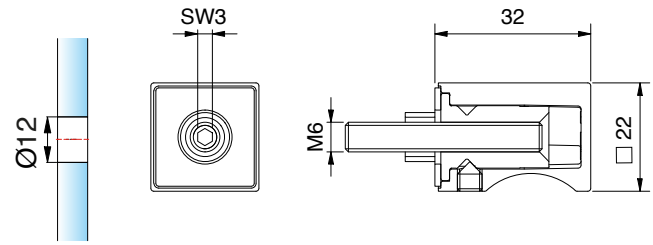

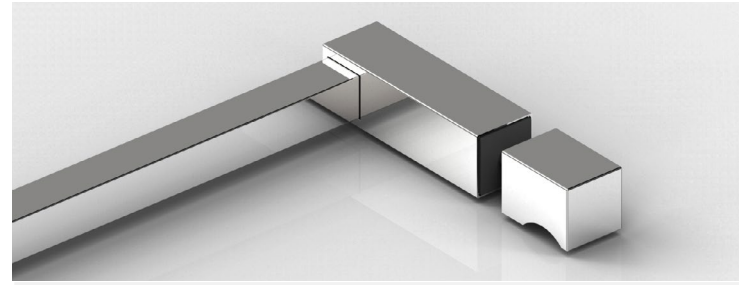

exterior parts, left and right, for towel support bars, square

article no	glass thickness
8688__-AT	6 - 13,52 mm

1/1

finish	
ZN5	gloss chrome
ZN1	matt chrome
ZNPVD20	gold optic
ZNPVD22	stainless steel optic
ZN135	deep black matt
ZN134	white matt
ZNPVD39	gold bronze brushed
ZNPVD40	gold optic brushed
ZNPVD41	copper optic brushed
ZNPVD42	graphite metal optic brushed

handle for towel support bars, square

article no	glass thickness
8688__-GS	6 - 13,52 mm

1/1

finish	
ZN5	gloss chrome
ZN1	matt chrome
ZNPVD20	gold optic
ZNPVD22	stainless steel optic
ZN135	deep black matt
ZN134	white matt
ZNPVD39	gold bronze brushed
ZNPVD40	gold optic brushed
ZNPVD41	copper optic brushed
ZNPVD42	graphite metal optic brushed

Towel holder, square/ round

MADE IN GERMANY

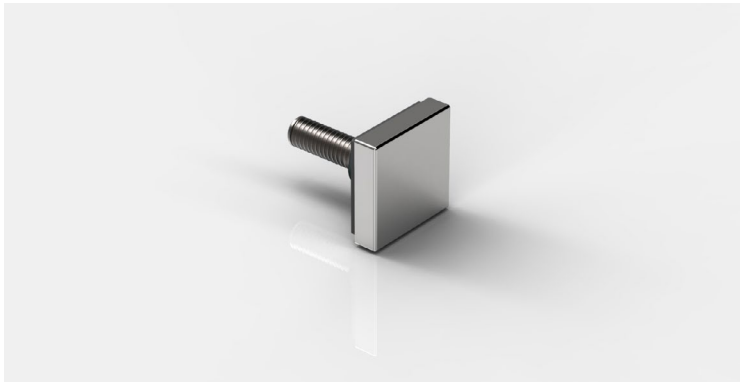



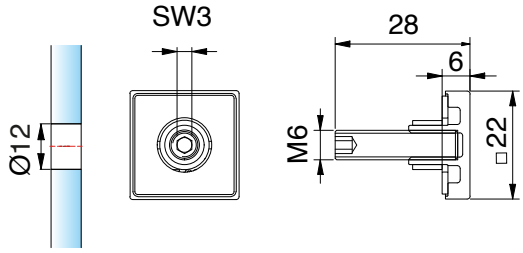

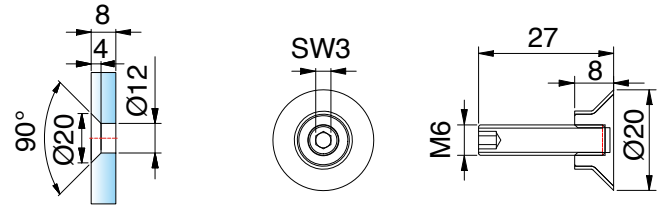

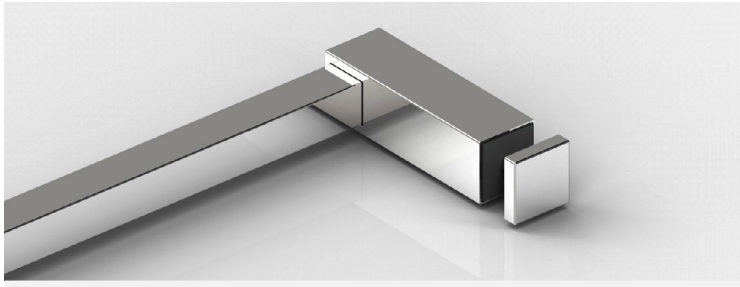

raised point fixture for towel support bars, square

article no	glass thickness
8688__-E	6 - 13,52 mm



finish	
ZN5	gloss chrome
ZN1	matt chrome
ZNPVD20	gold optic
ZNPVD22	stainless steel optic
ZN135	deep black matt
ZN134	white matt
ZNPVD39	gold bronze brushed
ZNPVD40	gold optic brushed
ZNPVD41	copper optic brushed
ZNPVD42	graphite metal optic brushed

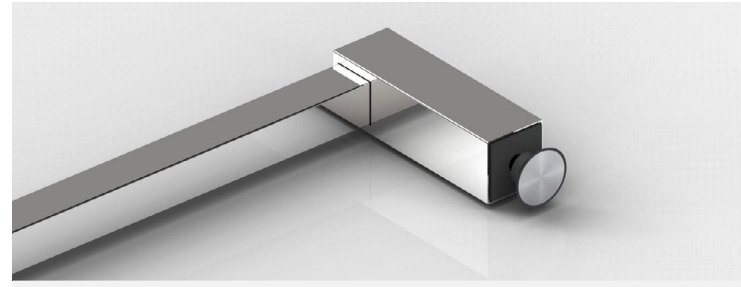

flush point fixture for towel support bars

article no	glass thickness
8686__-F*	8 - 13,52 mm



Oberfläche	
VA	stainless steel
ZNPVD20	gold optic
ZNPVD35	black matt

*__note:__ 8686VA-F (stainless steel) can be combined with gloss chrome (ZN5), matt chrome (ZN1) and stainless steel look (ZNPVD22).

Towel holder, square

MADE IN GERMANY



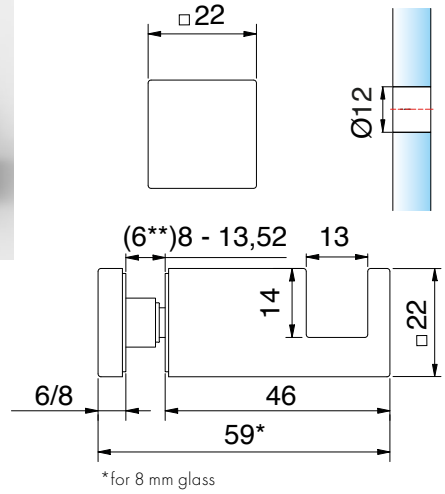

*for 8 mm glass



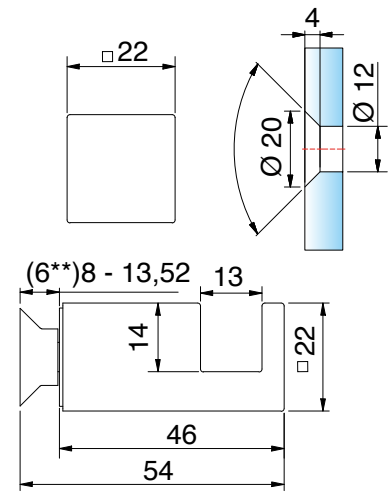

towel bar, raised head, set screw on top (GO) / underneath (GU)

article no.	glass thickness
8376__-GU	(6**)8 - 13,52 mm

1/1

finish	
ZN5	gloss chrome
ZNPVD20*	gold optic
ZNPVD22*	stainless steel optic
ZN135	deep black matt

towel bar, flush, set screw on top (FO) / underneath (FU)

article no.	glass thickness
8376__-FU	8 - 13,52 mm

1/1

finish	
ZN5	gloss chrome
ZNPVD20*	gold optic
ZNPVD22*	stainless steel optic
ZN135	deep black matt

*article discontinued
**article No. 8274-4HZ replaces article No. 8274-2HZ when using FTG-6. 8274-4HZ must be ordered separately for FTG-6.

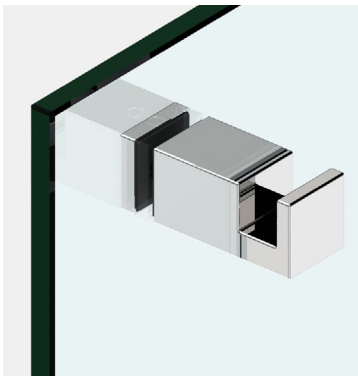

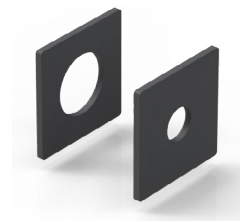

1/1

article no.	article description
8274-4HZ	HZ insert for 6mm glass (square)

Depending on the installation height of the towel bar, you can choose the set screw to be on the top or bottom.

Towel holder, square

MADE IN GERMANY

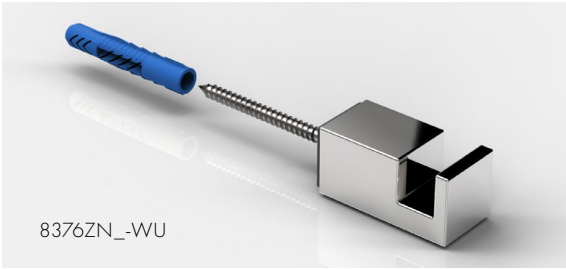

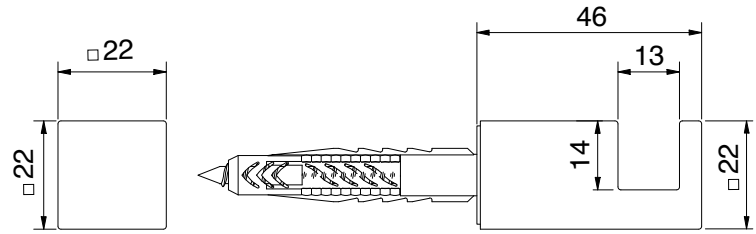

towel bar, wall mounted, set screw on top (WO) / underneath (WU)

article no.	glass thickness
8376__-WU	



finish	
ZN5	gloss chrome
ZNPVD20*	gold optic
ZNPVD22*	stainless steel optic
ZN135	deep black matt

*article discontinued



Depending on the installation height of the towel bar, you can choose the set screw to be on the top or bottom.

stabilizer-bar sets, square

MADE IN GERMANY

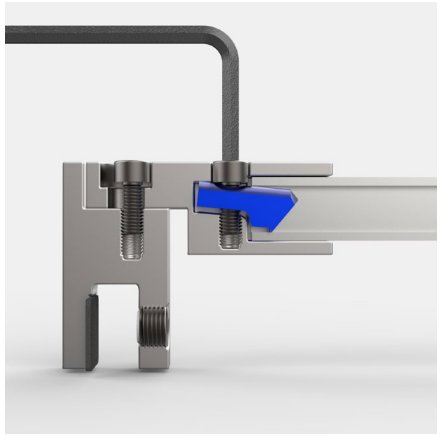

The adjustable stabiliser bar systems have been developed from scratch and, thanks to the new clamping technology, offer greater stability and easier installation.

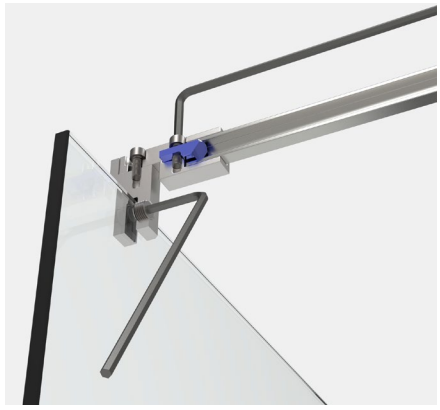

new clamp technique

The internal clamp is pressed against the tube by means of an hexagon socket screw

simplified assembly

All screws on the individual supports, as well as on the complete bars can be fastened with one hex key.

Note

To ensure the **shower is stable**, we recommend that the adjustable round or square stabilising bar should **not be longer than 1200 mm**. A shower with a rail system does not provide the same level of stability as a shower enclosure with a **stabilising bar and T-piece** once it reaches a size of **approximately 1000 mm.**

Please take into account when planning!



stabilizer-bar sets, square

MADE IN GERMANY

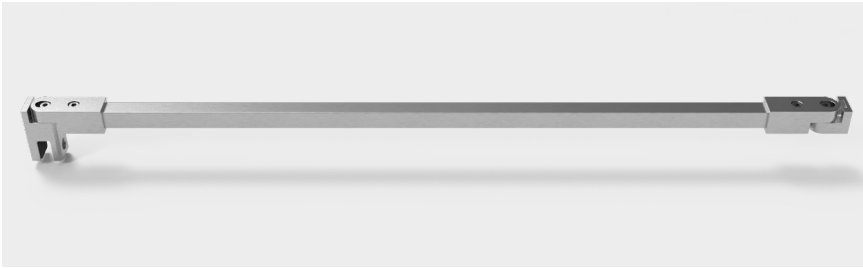

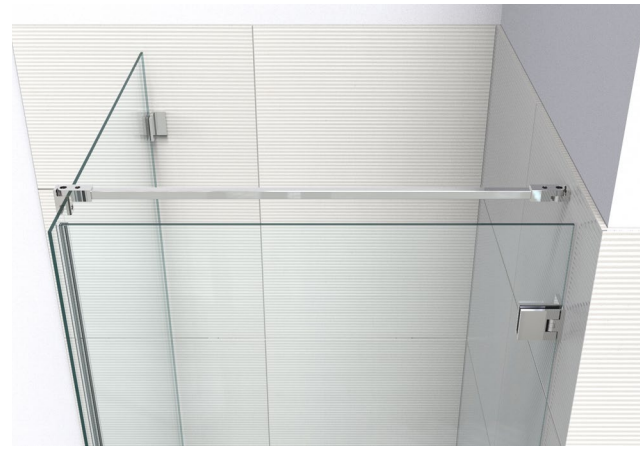

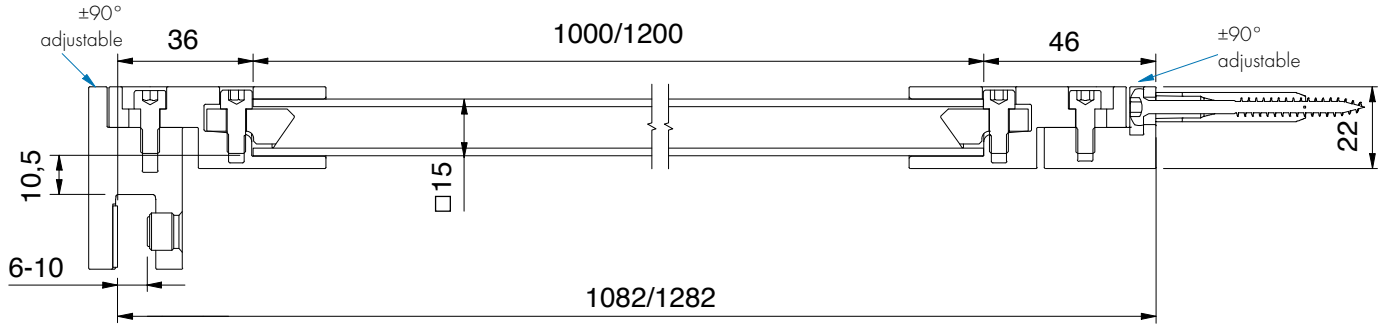

	article no.	finish	glass thickness	Länge	article description
	8794ZN5-1000	gloss chrome	6-10 mm	1000 mm	stabilizer-bar set glass-wall
	8794ZN1-1000	matt chrome		1000 mm	wall connection rotatable
	8794ZN10-1000	gloss nickel		1000 mm	
	8794ZNPVD20-1000	gold optic		1000 mm	
	8794ZNPVD22-1000	stainless steel optic		1000 mm	
	8794ZN134-1000	white matt		1000 mm	
	8794ZN135-1000	deep black matt		1000 mm	
	8794ZNPVD39-1200	gold bronze brushed		1200 mm	
	8794ZNPVD40-1200	gold optic brushed		1200 mm	
	8794ZNPVD41-1200	copper optic brushed		1200 mm	
	8794ZNPVD42-1200	graphite metal optic brushed		1200 mm	

stabilizer-bar sets, square

MADE IN GERMANY



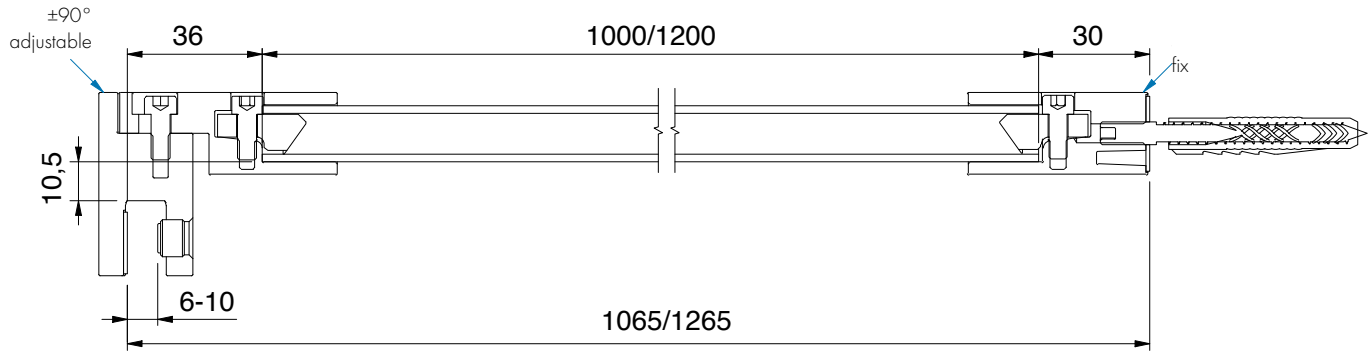

	article no.	finish	glass thickness	length	article description
	8794ZN5-1000	gloss chrome	6-10 mm	1000 mm	stabilizer-bar set glass-wall
	8794ZN135-1000	deep black matt		1000 mm	wall connection fix
	8794ZNPVD39-1200	gold bronze brushed		1200 mm	
	8794ZNPVD40-1200	gold optic brushed		1200 mm	
	8794ZNPVD41-1200	copper optic brushed		1200 mm	
	8794ZNPVD42-1200	graphite metal optic brushed		1200 mm	





stabilizer-bar sets, square

MADE IN GERMANY

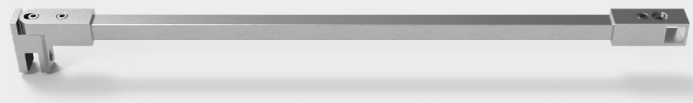

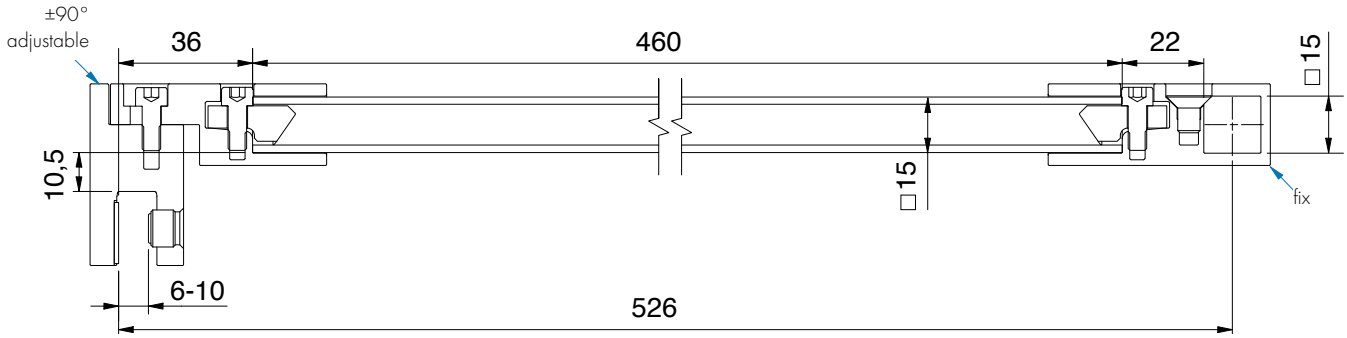

	article no.	finish	glass thickness	length	article description
	8797ZN5-460	gloss chrome	6-10 mm	460 mm	stabilizer-bar set, glass/T-piece
	8797ZN135-460	deep black matt		460 mm	



stabilizer-bar sets, square

MADE IN GERMANY

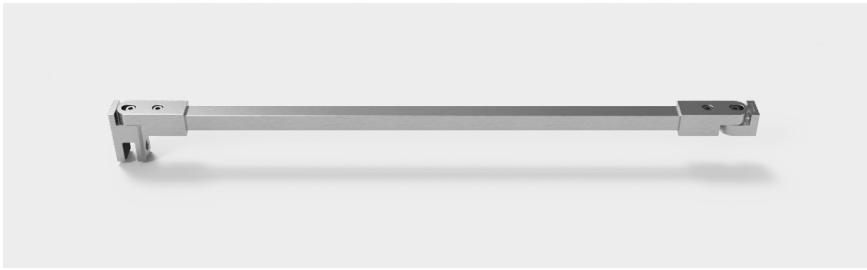



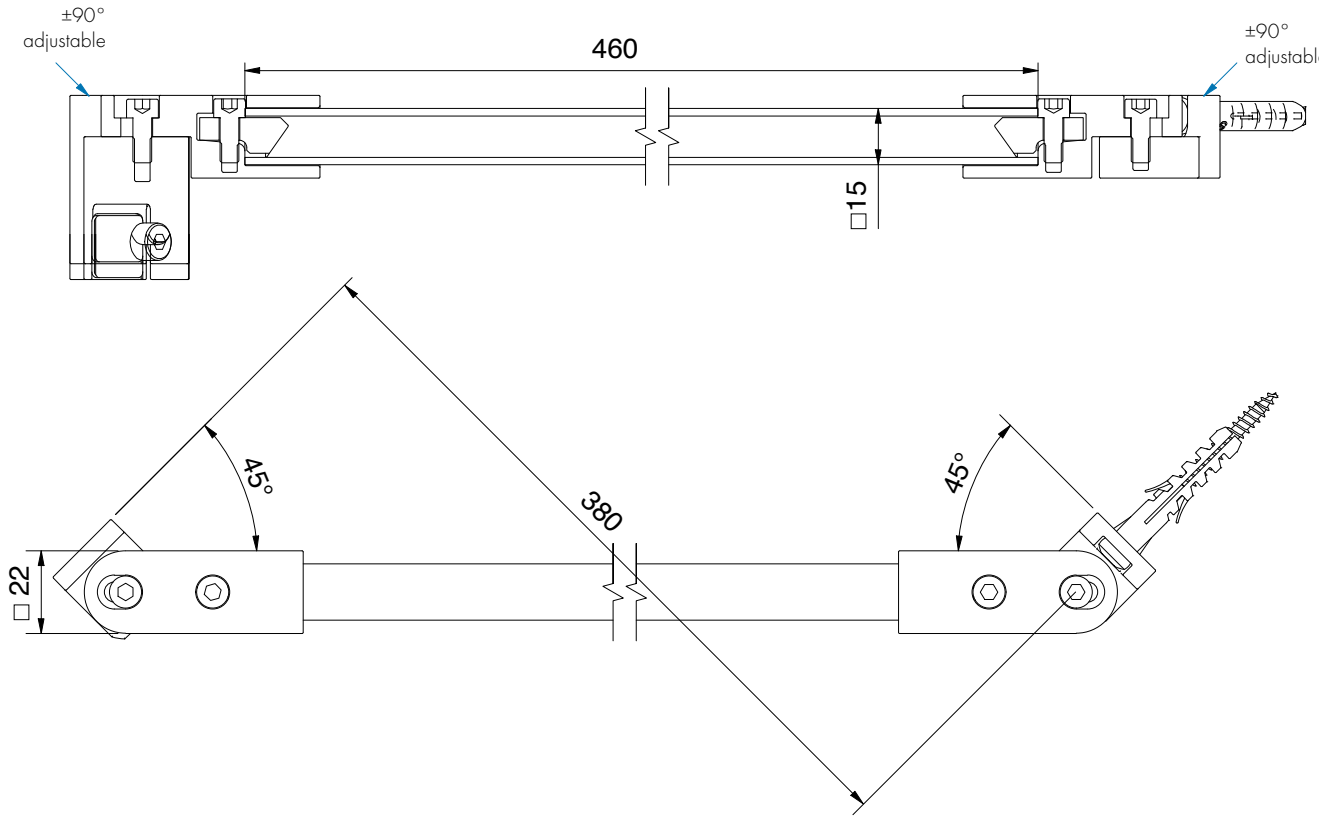

	article no.	finish	glass thickness	length	article description
	8796ZN5-460	gloss chrome	6-10 mm	460 mm	stabilizer-bar set, glass-wall 45°
	8796ZN135-460	deep black matt		460 mm	

1/1

stabilizer-bar sets, square

MADE IN GERMANY



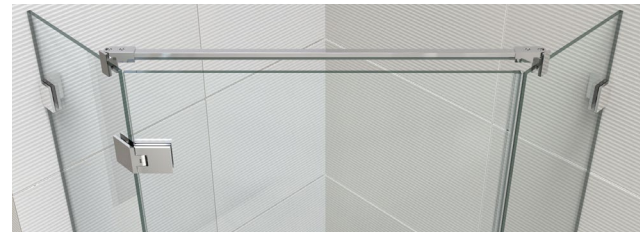

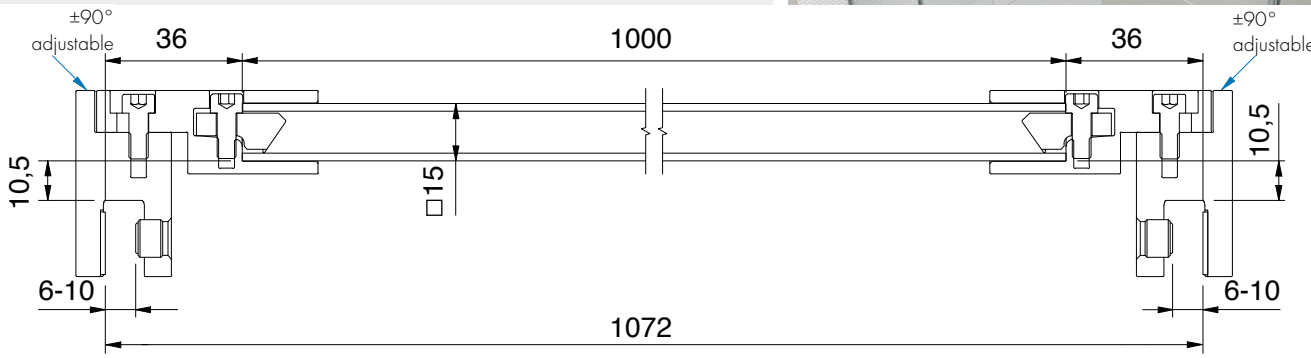

	article no.	finish	glass thickness	length	article description
	8795ZN5-1000	gloss chrome	6-10 mm	1000 mm	stabilizer-bar set glass-glass
■	8795ZN135-1000	deep black matt		1000 mm	

1/1



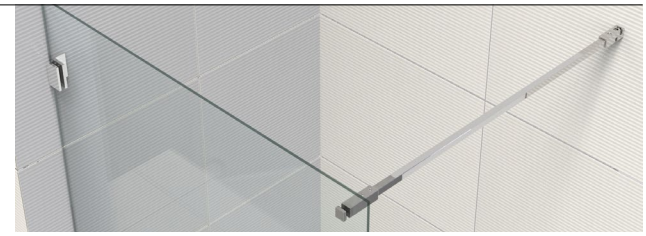

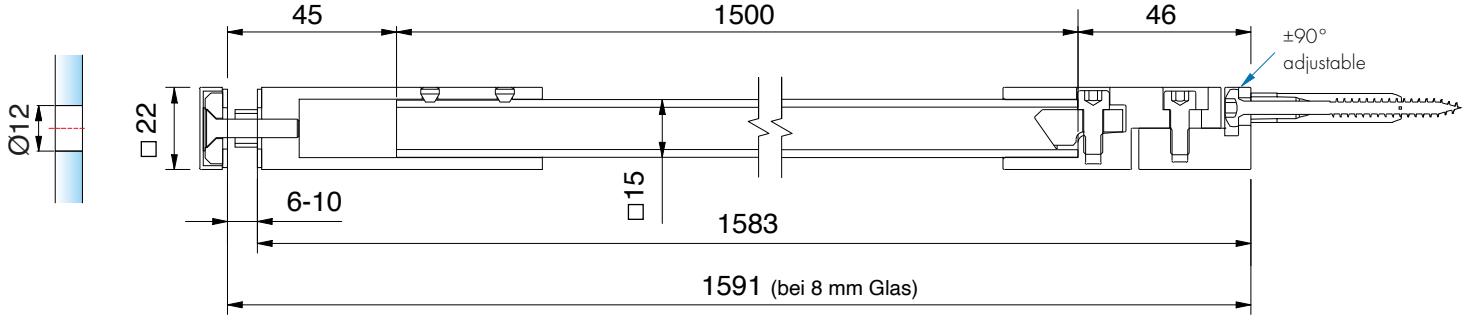

	article no.	finish	glass thickness	length	article description
	8798ZN5-1500	gloss chrome	6-10 mm	1000 mm	stabilizer-bar set, with glass support
■	8798ZN135-1500	deep black matt		1000 mm	

1/1

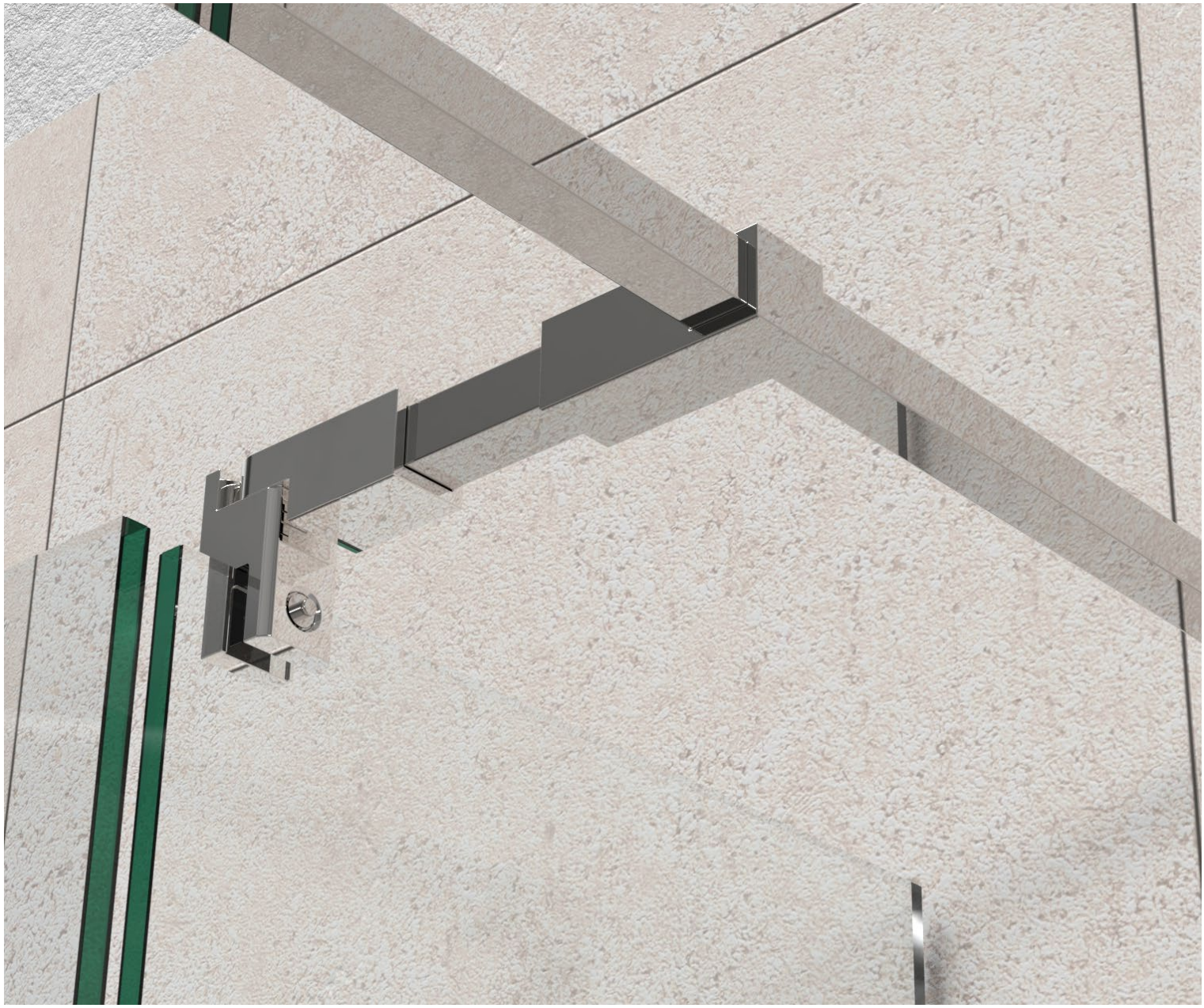

stabilizer-bar single parts, square

MADE IN GERMANY

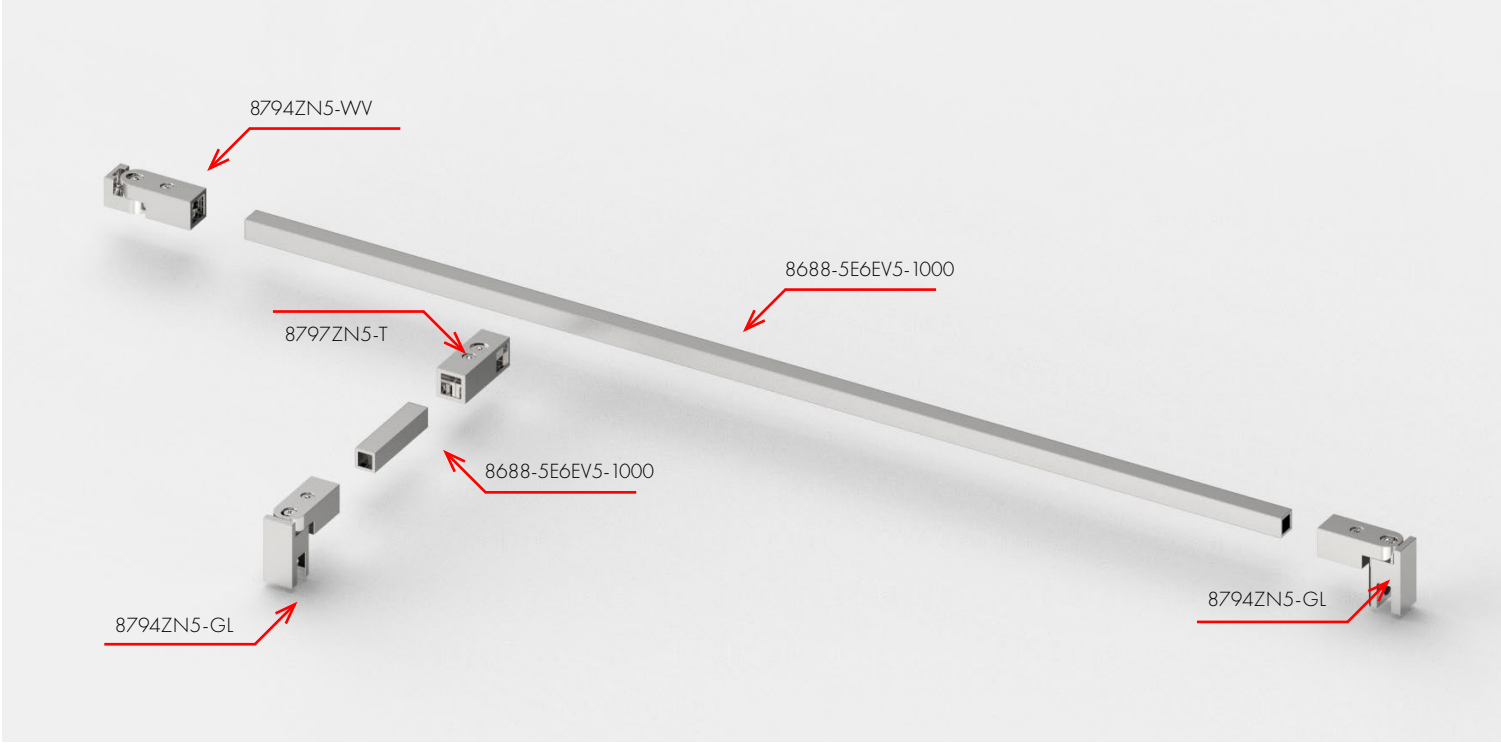



8794ZN5-WV



8794ZN5-GL



8797ZN5-T



8688-5E6EV5-1000

stabilizer-bar, square - Tube for stabilizer-bar 8686

MADE IN GERMANY



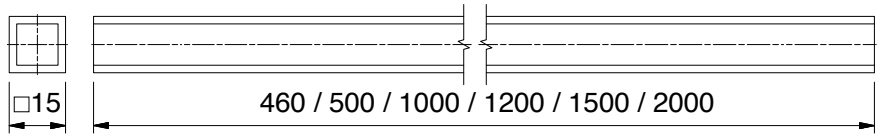

article no.	finish	length	material	suitable connections
8688-5E6EV5-460	pickled aluminum polished and anodized	460 mm	Aluminium	ZN5
8688-5E6EV5-1000	pickled aluminum polished and anodized	1000 mm	Aluminium	ZN5
8688-5E6EV5-1500	pickled aluminum polished and anodized	1500 mm	Aluminium	ZN5
8688-5E6EV5-2000	Aluminium-spezialgebeizt-glanzeloxiert	2000 mm	Aluminium	ZN5
8688-5E6EV1-1000	aluminum optic (anodised silver)	1000 mm	Aluminium	ZN1
8688-5E6EV1-1500	aluminum optic (anodised silver)	1500 mm	Aluminium	ZN1
8688-5E6EV1-2000	aluminum optic (anodised silver)	2000 mm	Aluminium	ZN1
8688-5MS7-1300	gloss chrome	1300 mm	Brass	ZN5
8688-5MSPVD20-500	gold optic	500 mm	Brass	ZNPVD20
8688-5MSPVD20-1000	gold optic	1000 mm	Brass	ZNPVD20
8688-5MS5-500	gloss nickel	500 mm	Brass	ZN10
8688-5MS5-1000	gloss nickel	1000 mm	Brass	ZN10
8688-5E123-460	stainless steel optic	460 mm	Aluminium	ZNPVD22
8688-5E123-1000	stainless steel optic	1000 mm	Aluminium	ZNPVD22
8688-5E123-1500	stainless steel optic	1500 mm	Aluminium	ZNPVD22
8688-5E123-2000	stainless steel optic	2000 mm	Aluminium	ZNPVD22
8688-5E6C35-1000	deep black matt	1000 mm	Aluminium	ZN135
8688-5E6C35-1500	deep black matt	1500 mm	Aluminium	ZN135
8688-5E6C35-2000	deep black matt	2000 mm	Aluminium	ZN135
8688-5AL134-1500	white matt	1500 mm	Aluminium	ZN134
8688-5VAPVD39-1200	gold bronze brushed	1200 mm	Stainless Steel	ZNPVD39
8688-5VAPVD40-1200	gold optic brushed	1200 mm	Stainless Steel	ZNPVD40
8688-5VAPVD41-1200	copper optic brushed	1200 mm	Stainless Steel	ZNPVD41
8688-5VAPVD42-1200	graphite metal optic brushed	1200 mm	Stainless Steel	ZNPVD42

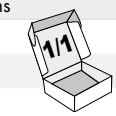

You will find instructions for determining the cut lengths from p.578

stabilizer-bar single parts, square

MADE IN GERMANY





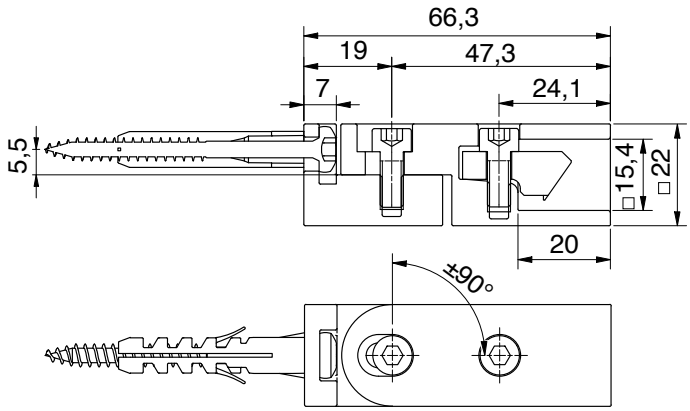

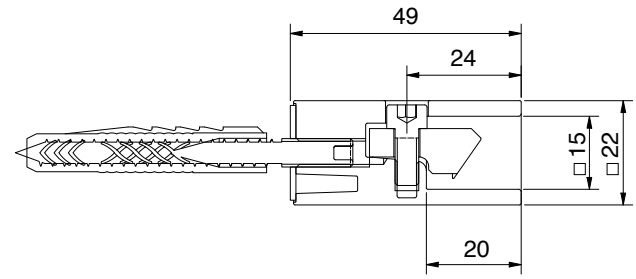

for tube □ 15 mm



Adjustable wall connection ± 90°

article no.

8794ZN__-WV

1/1

finish

	ZN5	gloss chrome
	ZN1	matt chrome
	ZN10	gloss nickel
	ZNPVD20	gold optic
	ZNPVD22	stainless steel optic
	ZN134	white matt
	ZN135	deep black matt
	ZNPVD39	gold bronze brushed
	ZNPVD40	gold optic brushed
	ZNPVD41	copper optic brushed
	ZNPVD42	graphite metal optic brushed

for tube □ 15 mm

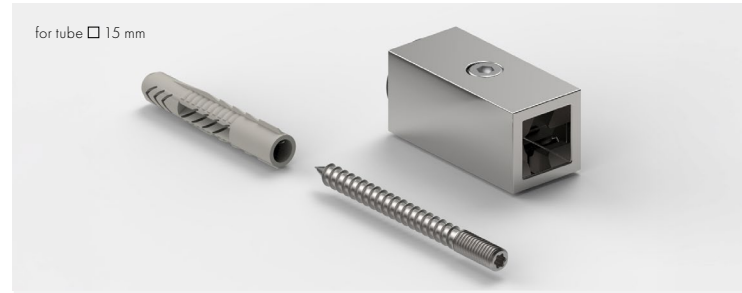

fixed wall connection

article no.

8794ZN__-W

1/1

finish

	ZN5	gloss chrome
	ZN1	matt chrome
	ZN10	gloss nickel
	ZNPVD20	gold optic
	ZNPVD22	stainless steel optic
	ZN134	white matt
	ZN135	deep black matt
	ZNPVD39	gold bronze brushed
	ZNPVD40	gold optic brushed
	ZNPVD41	copper optic brushed
	ZNPVD42	graphite metal optic brushed

stabilizer-bar single parts, square

MADE IN GERMANY









glass adapter 90° adjustable

article no.	glass thickness
8794ZN__-GL	6 - 10 mm

1/1

finish

ZN5	gloss chrome
ZN1	matt chrome
ZN10	gloss nickel
ZNPVD20	gold optic
ZNPVD22	stainless steel optic
ZN134	white matt
ZN135	deep black matt
ZNPVD39	gold bronze brushed
ZNPVD40	gold optic brushed
ZNPVD41	copper optic brushed
ZNPVD42	graphite metal optic brushed

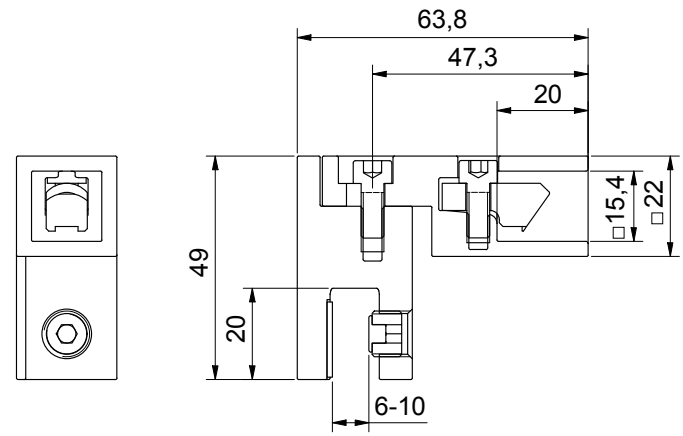

stabilizer-bar single parts, square

MADE IN GERMANY





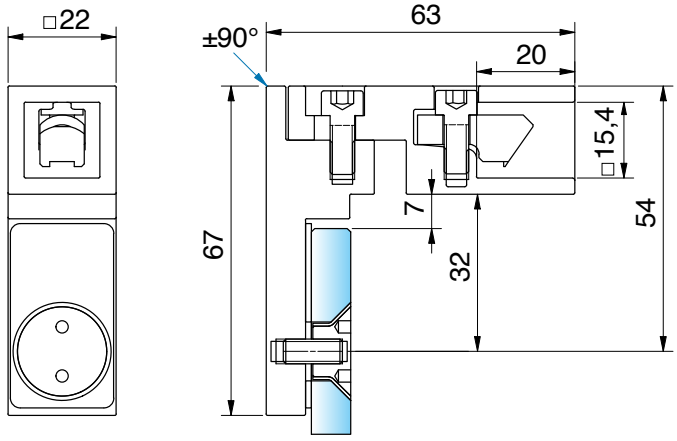

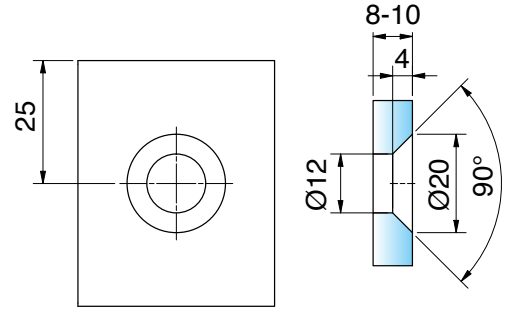

glass adapter flush 90° adjustable		
article no.		glass thickness
8794ZN__-GF		6 - 10 mm
finish		
	ZN5	gloss chrome
	ZN1	matt chrome
	ZN10	gloss nickel
	ZNPVD20	gold optic
	ZNPVD22	stainless steel optic
	ZN134	white matt
	ZN135	deep black matt
	ZNPVD39	gold bronze brushed
	ZNPVD40	gold optic brushed
	ZNPVD41	copper optic brushed
	ZNPVD42	graphite metal optic brushed



These individual parts were also developed to fit lifting hardware.

stabilizer-bar single parts, square

MADE IN GERMANY

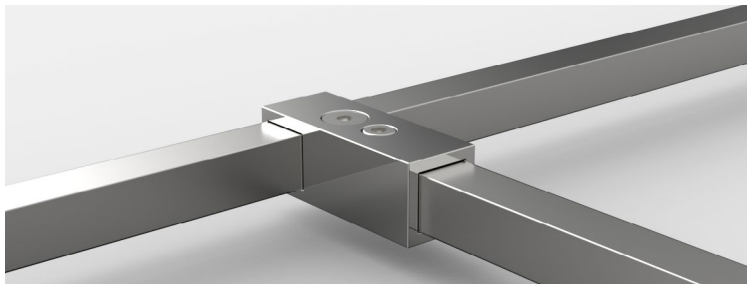

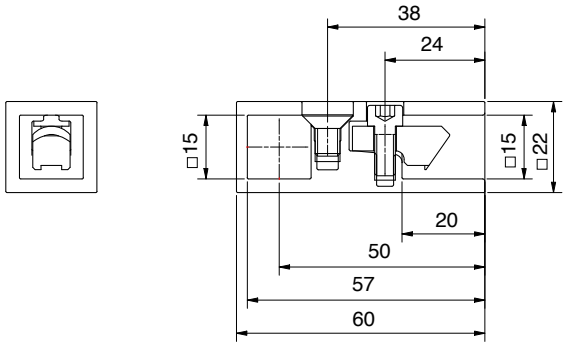

for tube □ 15 mm



T-adapter for 2 stabilizer bars 15x15 mm



article no.	
8797ZN__-T	
finish	
ZN5	gloss chrome
ZN1	matt chrome
ZN10	gloss nickel
ZNPVD20	gold optic
ZNPVD22	stainless steel optic
ZN134	white matt
ZN135	deep black matt
ZNPVD39	gold bronze brushed
ZNPVD40	gold optic brushed
ZNPVD41	copper optic brushed
ZNPVD42	graphite metal optic brushed

Note
For the stability of the shower we recommend that when using the shortenable round or square stabilizer-bar to not go longer than 1200 mm. Please take into account when planning: A shower enclosure using a railing system above a certain size, will not reach the stability of a shower enclosure with stabilizer-bar and T-adapter.

stabilizer-bar single parts, square

MADE IN GERMANY

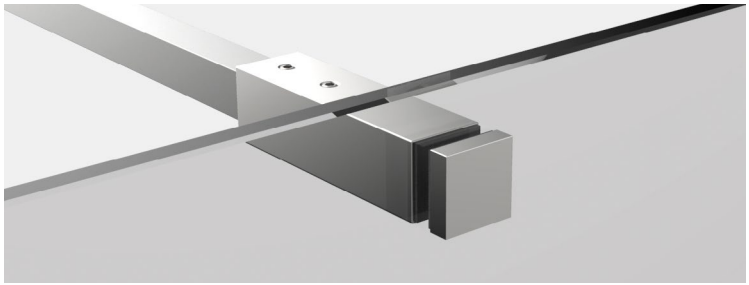



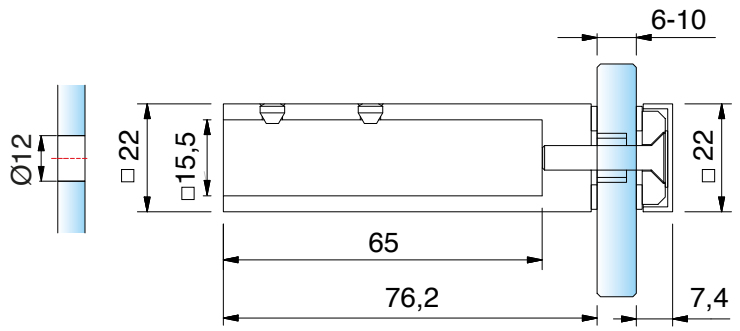



glass adapter side panel

article no.	glass thickness
8498MS__-G	6 - 10 mm

1/1

finish

	MS7	gloss chrome
	MS135	deep black matt

stabilizer-bar single parts, square

MADE IN GERMANY

To cut the stabilizing bar tube to the correct length, you will find specific measurement guidelines for various situations here.
Clearance width (LW) | Tube cut length (ZR)

Set: 8794ZN__-1000 /-1200

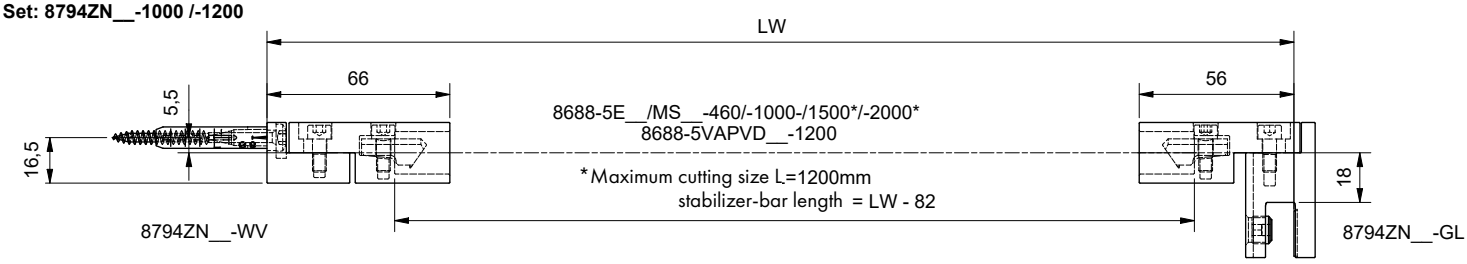

Set: 8793ZN__-1000 / -1200

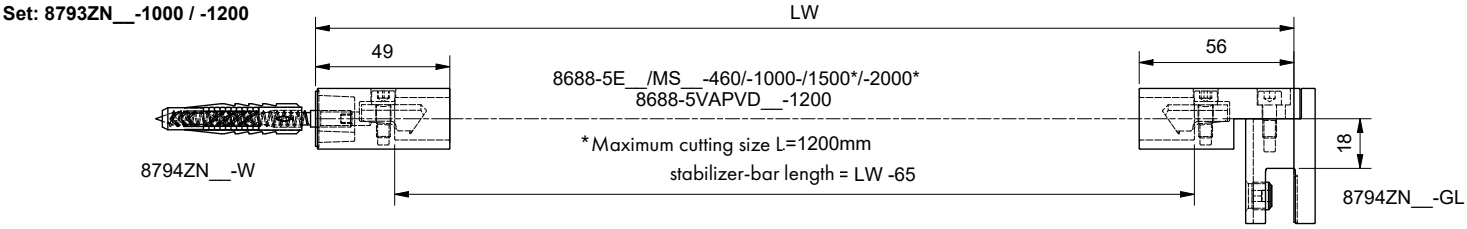

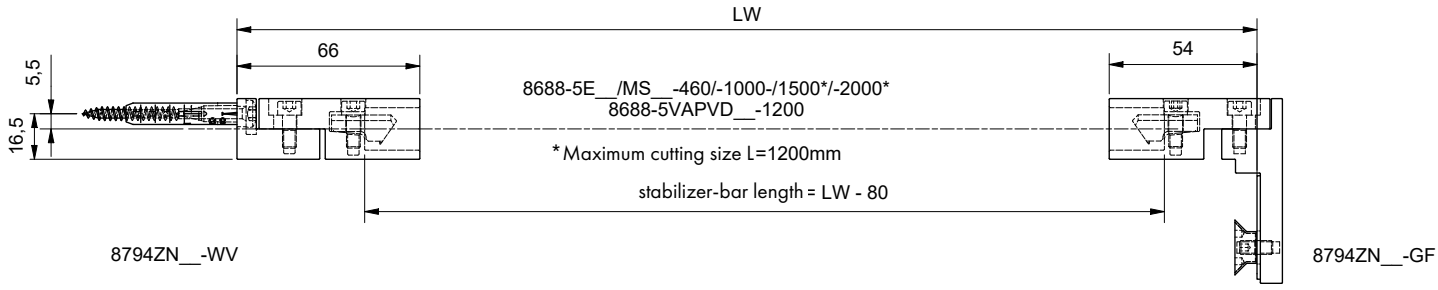

stabilizer-bar single parts, square

MADE IN GERMANY

To cut the stabilizing bar tube to the correct length, you will find specific measurement guidelines for various situations here.
Clearance width (LW) | Tube cut length (ZR)

Set: 8797ZN__-460

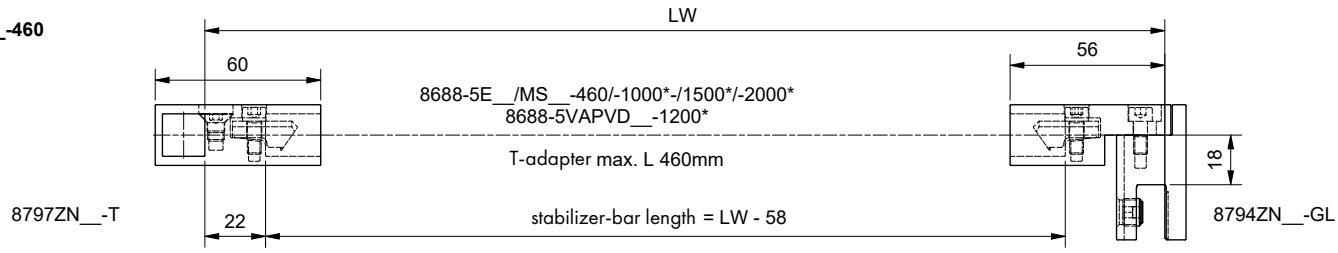

Set: 8795ZN__-1000

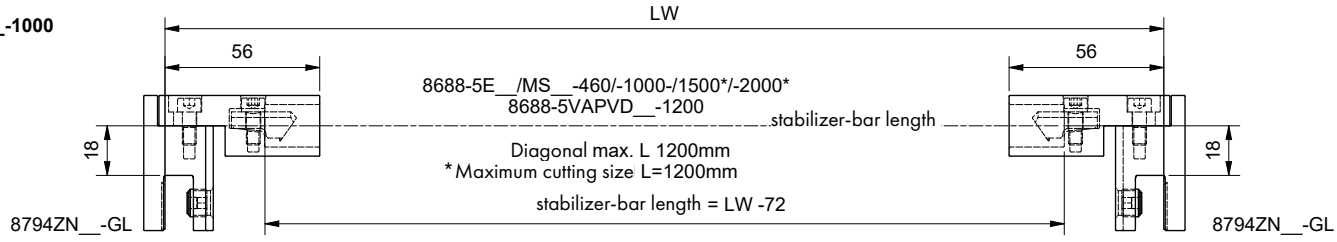

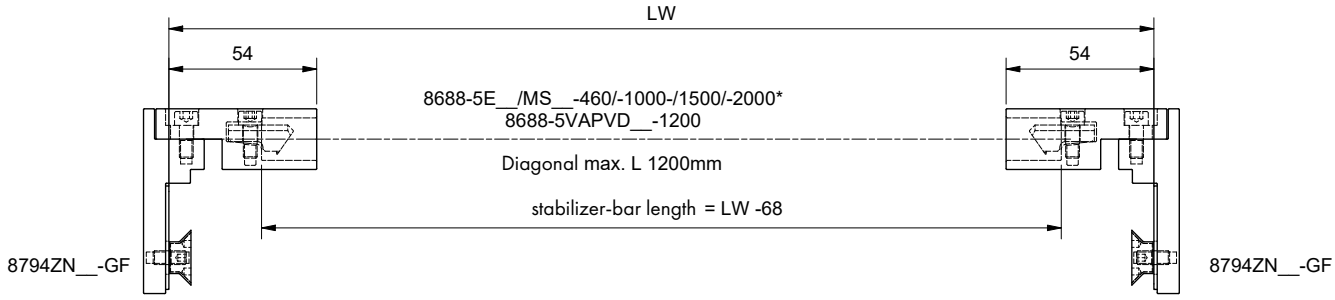

stabilizer-bar - railing single parts, square

MADE IN GERMANY



Note:
To ensure the shower is stable, we recommend that the adjustable round or square stabilising bar is no longer than 1200 mm. Please bear the following in mind when planning:
Once a certain size is exceeded, a shower with a railing system does not offer the same stability as a shower enclosure with a stabilising bar and T-piece.

stabilizer-bar - railing single parts, square

MADE IN GERMANY

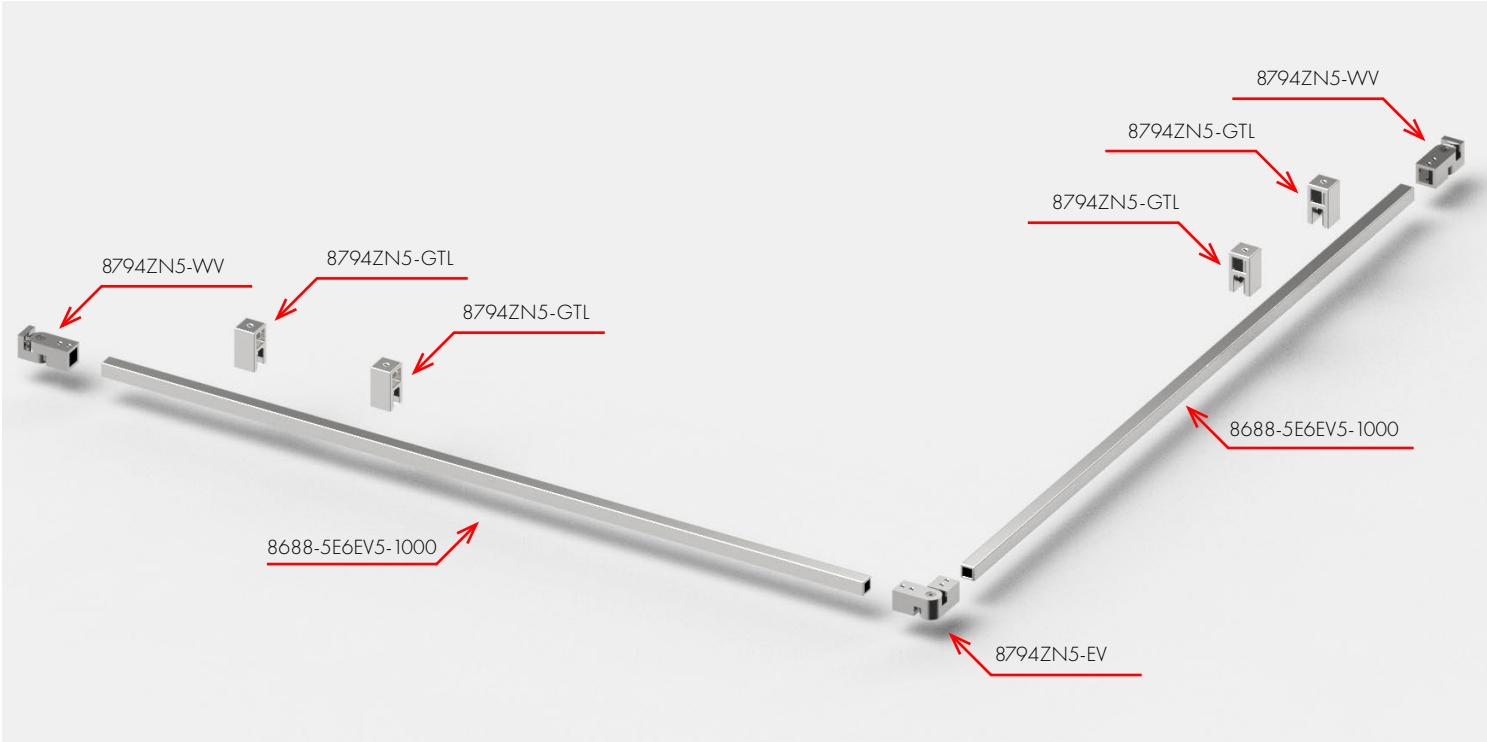



8794ZN5-WV



8794ZN5-GTL

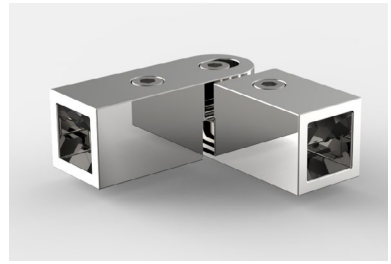

8794ZN5-EV



8688-5E6EV5-1000

stabilizer-bar, square - Tube for stabilizer-bar 8686

MADE IN GERMANY



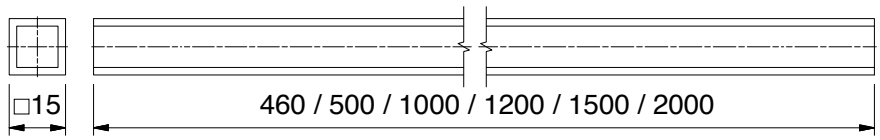

article no.	finish	length	material	suitable connections
8688-5E6EV5-460	pickled aluminum polished and anodized	460 mm	Aluminium	ZN5
8688-5E6EV5-1000	pickled aluminum polished and anodized	1000 mm	Aluminium	ZN5
8688-5E6EV5-1500	pickled aluminum polished and anodized	1500 mm	Aluminium	ZN5
8688-5E6EV5-2000	Aluminium-spezialgebeizt-glanzeloxiert	2000 mm	Aluminium	ZN5
8688-5E6EV1-1000	aluminum optic (anodised silver)	1000 mm	Aluminium	ZN1
8688-5E6EV1-1500	aluminum optic (anodised silver)	1500 mm	Aluminium	ZN1
8688-5E6EV1-2000	aluminum optic (anodised silver)	2000 mm	Aluminium	ZN1
8688-5MS7-1300	gloss chrome	1300 mm	Brass	ZN5
8688-5MSPVD20-500	gold optic	500 mm	Brass	ZNPVD20
8688-5MSPVD20-1000	gold optic	1000 mm	Brass	ZNPVD20
8688-5MS5-500	gloss nickel	500 mm	Brass	ZN10
8688-5MS5-1000	gloss nickel	1000 mm	Brass	ZN10
8688-5E123-460	stainless steel optic	460 mm	Aluminium	ZNPVD22
8688-5E123-1000	stainless steel optic	1000 mm	Aluminium	ZNPVD22
8688-5E123-1500	stainless steel optic	1500 mm	Aluminium	ZNPVD22
8688-5E123-2000	stainless steel optic	2000 mm	Aluminium	ZNPVD22
8688-5E6C35-1000	deep black matt	1000 mm	Aluminium	ZN135
8688-5E6C35-1500	deep black matt	1500 mm	Aluminium	ZN135
8688-5E6C35-2000	deep black matt	2000 mm	Aluminium	ZN135
8688-5AL134-1500	white matt	1500 mm	Aluminium	ZN134
8688-5VAPVD39-1200	gold bronze brushed	1200 mm	Stainless Steel	ZNPVD39
8688-5VAPVD40-1200	gold optic brushed	1200 mm	Stainless Steel	ZNPVD40
8688-5VAPVD41-1200	copper optic brushed	1200 mm	Stainless Steel	ZNPVD41
8688-5VAPVD42-1200	graphite metal optic brushed	1200 mm	Stainless Steel	ZNPVD42

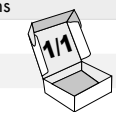

You will find instructions for determining the cut lengths from p.578

stabilizer-bar - railing single parts, square

MADE IN GERMANY





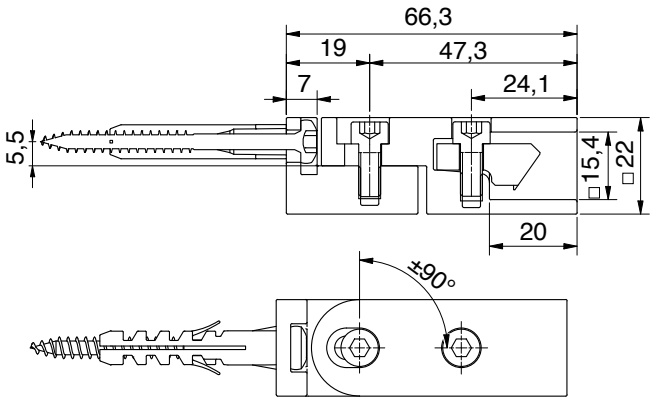

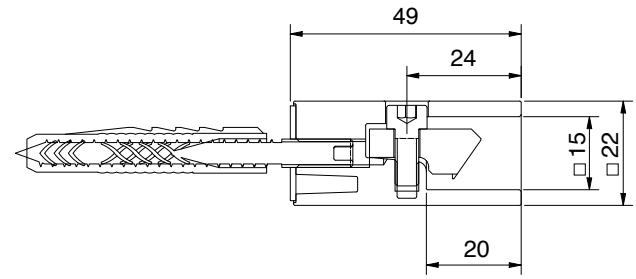

for tube □ 15 mm



Adjustable wall connection ± 90°

article no.

8794ZN__-WV

1/1

finish

	ZN5	gloss chrome
	ZN1	matt chrome
	ZN10	gloss nickel
	ZNPVD20	gold optic
	ZNPVD22	stainless steel optic
	ZN134	white matt
	ZN135	deep black matt
	ZNPVD39	gold bronze brushed
	ZNPVD40	gold optic brushed
	ZNPVD41	copper optic brushed
	ZNPVD42	graphite metal optic brushed

for tube □ 15 mm

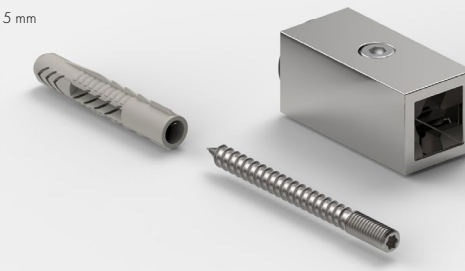

fixed wall connection

article no.

8794ZN__-W

1/1

finish

	ZN5	gloss chrome
	ZN1	matt chrome
	ZN10	gloss nickel
	ZNPVD20	gold optic
	ZNPVD22	stainless steel optic
	ZN134	white matt
	ZN135	deep black matt
	ZNPVD39	gold bronze brushed
	ZNPVD40	gold optic brushed
	ZNPVD41	copper optic brushed
	ZNPVD42	graphite metal optic brushed

stabilizer-bar - railing single parts, square

MADE IN GERMANY

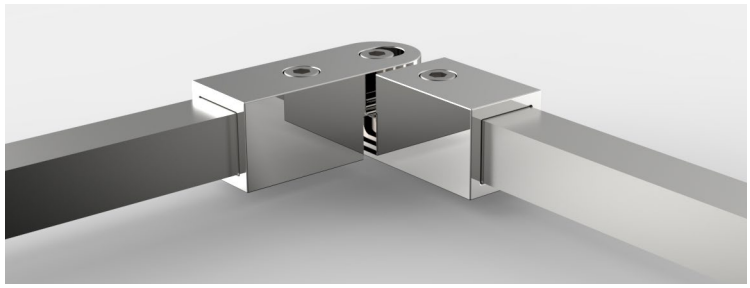

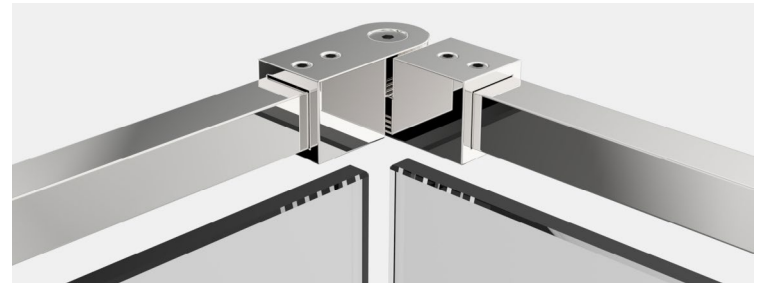

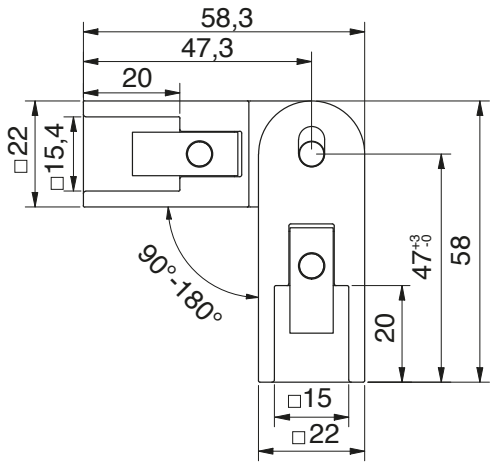

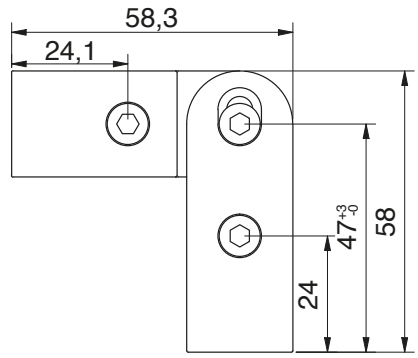

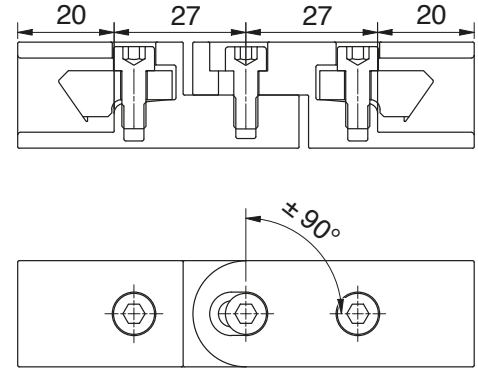

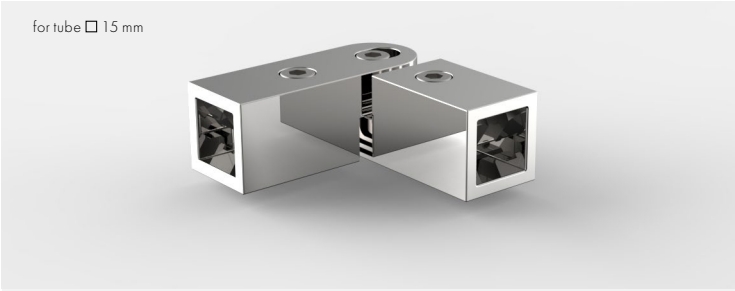

angle adapter adjustable 90-180°	
article no.	
8794ZN__-EV	
finish	
ZN5	gloss chrome
ZN1	matt chrome
ZN10	gloss nickel
ZNPVD20	gold optic
ZNPVD22	stainless steel optic
ZN134	white matt
ZN135	deep black matt



These individual parts were also developed to fit lifting hardware.

stabilizer-bar - railing single parts, square

MADE IN GERMANY



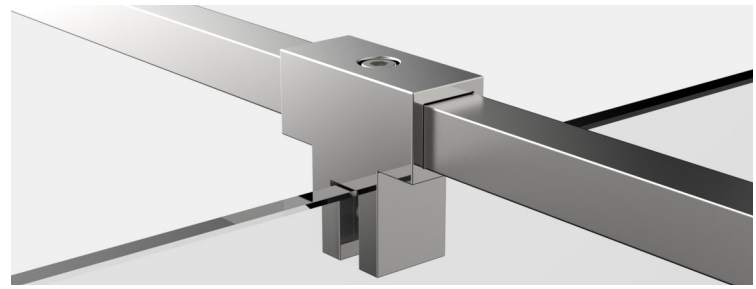

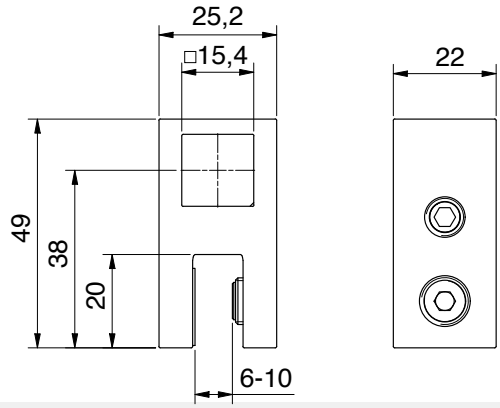

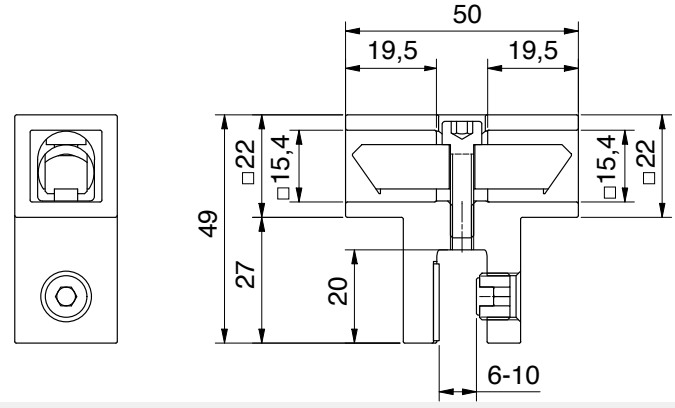

for tube □ 15 mm



for tube □ 15 mm



T-adapter

article no.	glass thickness
8794ZN__-GTL	6 - 10 mm

1/1

finish		
	ZN5	gloss chrome
	ZN1	matt chrome
	ZN10	gloss nickel
	ZNPVD20	gold optic
	ZNPVD22	stainless steel optic
	ZN134	white matt
	ZN135	deep black matt
	ZNPVD39	gold bronze brushed
	ZNPVD40	gold optic brushed
	ZNPVD41	copper optic brushed
	ZNPVD42	graphite metal optic brushed

T-adapter, double sided

article no.	glass thickness
8794ZN__-TS	6 - 10 mm

1/1

finish		
	ZN5	gloss chrome
	ZN1	matt chrome
	ZN10	gloss nickel
	ZNPVD20	gold optic
	ZNPVD22	stainless steel optic
	ZN134	white matt
	ZN135	deep black matt
	ZNPVD39	gold bronze brushed
	ZNPVD40	gold optic brushed
	ZNPVD41	copper optic brushed
	ZNPVD42	graphite metal optic brushed

These individual parts were also developed to fit lifting hardware.

stabilizer-bar - railing single parts, square

MADE IN GERMANY

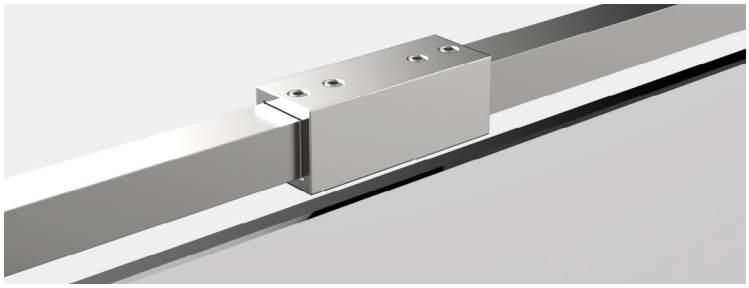

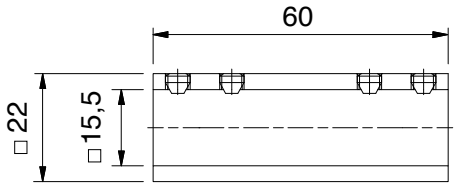



tube connector 180°

article no.

8494MS__-V180



finish

MS7	gloss chrome
MS135	deep black matt
ZNPVD22	stainless steel optic
ZNPVD39	gold bronze brushed
ZNPVD40	gold optic brushed
ZNPVD41	copper optic brushed
ZNPVD42	graphite metal optic brushed

stabilizer-bar - adjustable, square

MADE IN GERMANY

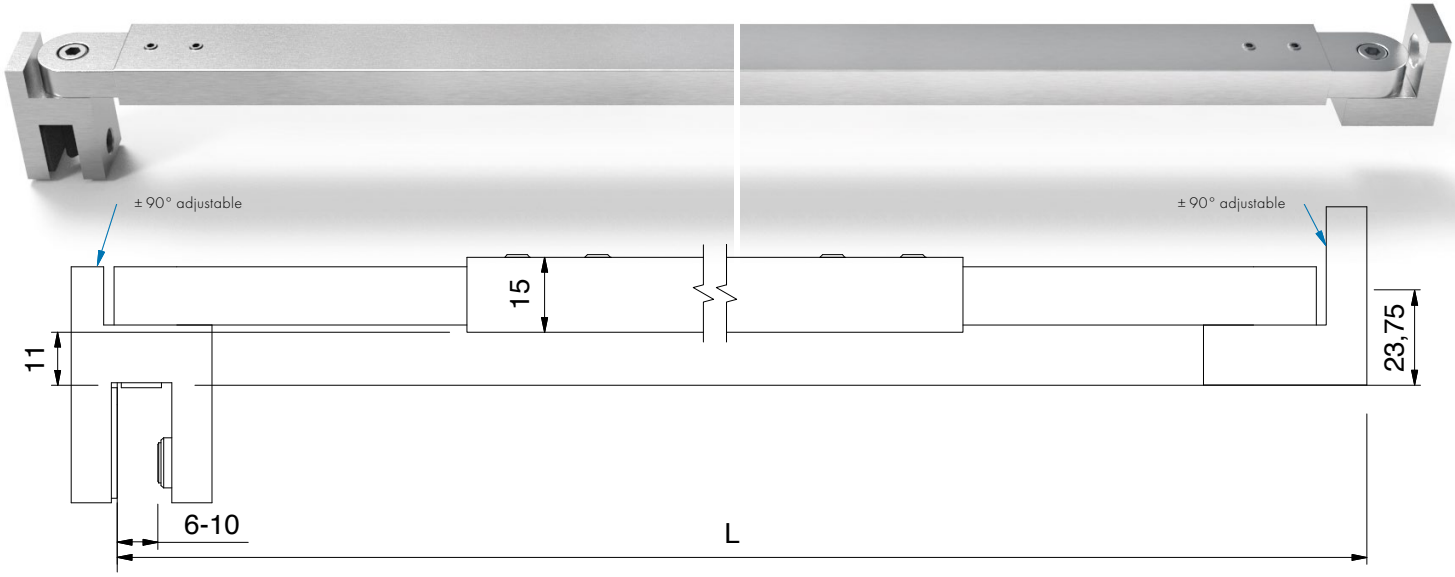

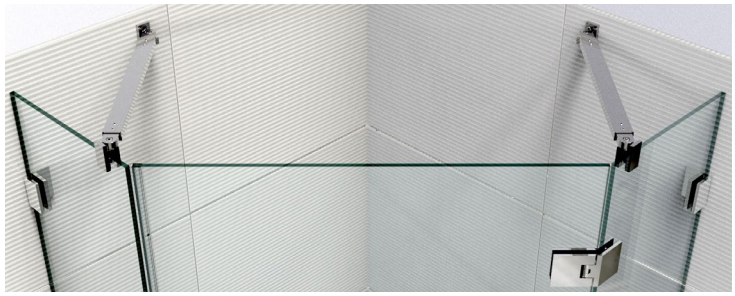

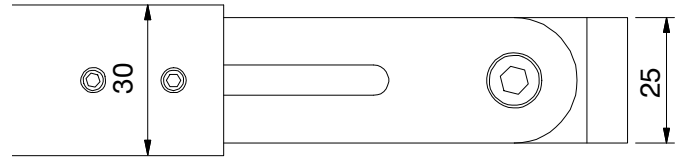

glass thickness: 6-10 mm

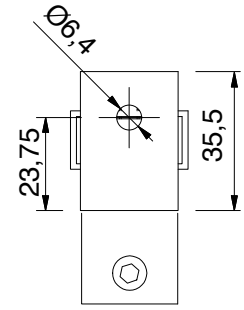



	Art.-Nr.	Oberfläche	Artikelbezeichnung
	8474MS7-380	gloss chrome	stabilizer-bar glass-wall
	8474MSPVD22-380	stainless steel optic	adjustable from 300-460 mm
	8474MS7-510	gloss chrome	stabilizer-bar glass-wall
	8474MSPVD22-510	stainless steel optic	adjustable from 430-590 mm
	8474MS7-640	gloss chrome	stabilizer-bar glass-wall
	8474MSPVD22-640	stainless steel optic	adjustable from 560-720 mm
	8474MS7-770	gloss chrome	stabilizer-bar glass-wall
	8474MSPVD22-770	stainless steel optic	adjustable from 690-850 mm
	8474MS7-900	gloss chrome	stabilizer-bar glass-wall
	8474MSPVD22-900	stainless steel optic	adjustable from 820-980 mm
	8474MS7-1030	gloss chrome	stabilizer-bar glass-wall
	8474MSPVD22-1030	stainless steel optic	adjustable from 950-1110 mm
	8474MS7-1160	gloss chrome	stabilizer-bar glass-wall
	8474MSPVD22-1160	stainless steel optic	adjustable from 1080-1240 mm
	8474MS7-1260	gloss chrome	stabilizer-bar glass-wall
	8474MSPVD22-1260	stainless steel optic	adjustable from 1180-1340 mm*
	8474MS7-1390	gloss chrome	stabilizer-bar glass-wall
	8474MSPVD22-1390	stainless steel optic	adjustable from 1310-1470 mm*
	8474MS7-1520	gloss chrome	stabilizer-bar glass-wall
	8474MSPVD22-1520	stainless steel optic	adjustable from 1440-1600 mm*
	8474MS7-1650	gloss chrome	stabilizer-bar glass-wall
	8474MSPVD22-1650	stainless steel optic	adjustable from 1570-1730 mm*
	8474MS7-1780	gloss chrome	stabilizer-bar glass-wall
	8474MSPVD22-1780	stainless steel optic	adjustable from 1700-1860 mm*
	8474MS7-1910	gloss chrome	stabilizer-bar glass-wall
	8474MSPVD22-1910	stainless steel optic	adjustable from 1830-1990 mm*

*Pipe cut (cut line visible).
tube subdivided (visible parting line)

stabilizer-bar - adjustable, square

MADE IN GERMANY

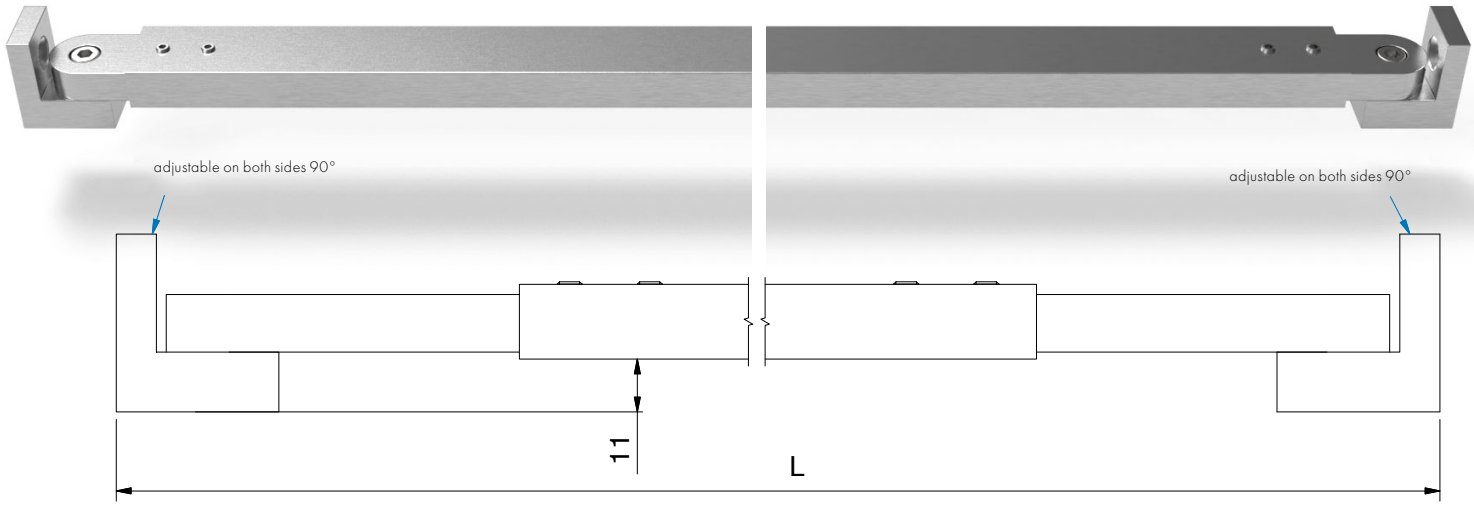



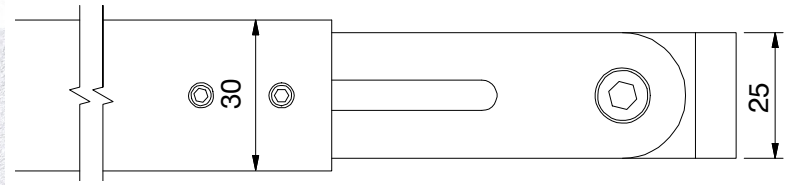

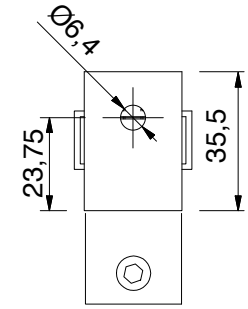



	article no.	finish	article description
	8477MS7-910	gloss chrome	stabilizer-bar wall-wall
	8477MSPVD22-910	stainless steel optic	adjustable from 830-990 mm
	8477MS7-1040	gloss chrome	stabilizer-bar wall-wall
	8477MSPVD22-1040	stainless steel optic	adjustable from 960-1120 mm
	8477MS7-1170	gloss chrome	stabilizer-bar wall-wall
	8477MSPVD22-1170	stainless steel optic	adjustable from 1090-1250 mm
	8477MS7-1270	gloss chrome	stabilizer-bar wall-wall
	8477MSPVD22-1270	stainless steel optic	adjustable from 1190-1350 mm*
	8477MS7-1400	gloss chrome	stabilizer-bar wall-wall
	8477MSPVD22-1400	stainless steel optic	adjustable from 1320-1480 mm*
	8477MS7-1530	gloss chrome	stabilizer-bar wall-wall
	8477MSPVD22-1530	stainless steel optic	adjustable from 1450-1610 mm*
	8477MS7-1660	gloss chrome	stabilizer-bar wall-wall
	8477MSPVD22-1660	stainless steel optic	adjustable from 1580-1740 mm*
	8477MS7-1790	gloss chrome	stabilizer-bar wall-wall
	8477MSPVD22-1790	stainless steel optic	adjustable from 1710-1870 mm*
	8477MS7-1920	gloss chrome	stabilizer-bar wall-wall
	8477MSPVD22-1920	stainless steel optic	adjustable from 1840-2000 mm*

*Pipe cut (cut line visible).
tube subdivided (visible parting line)

stabilizer-bar - adjustable, square

MADE IN GERMANY

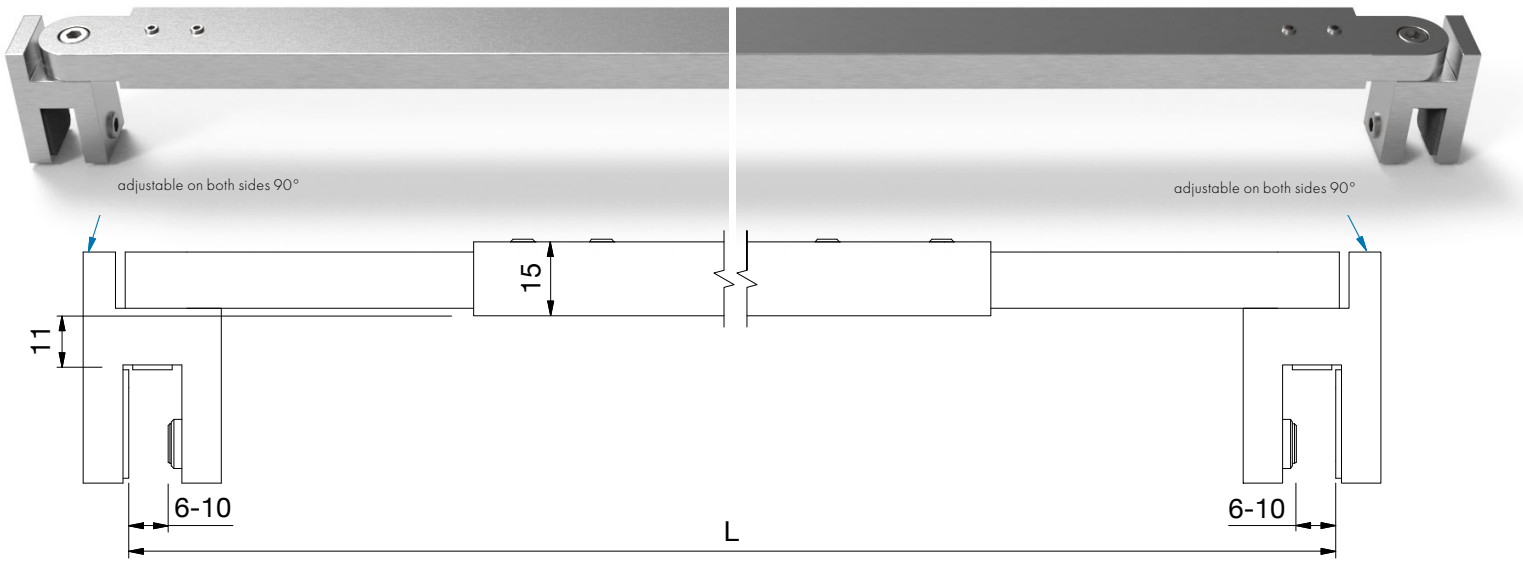

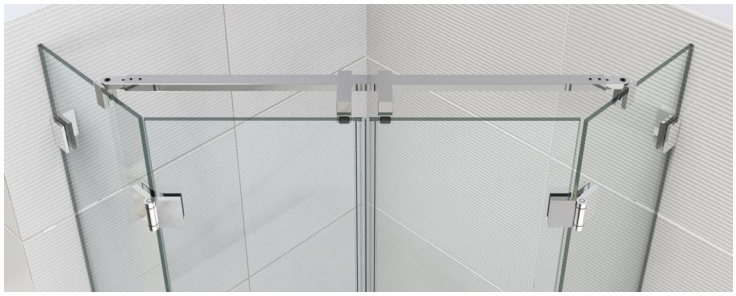

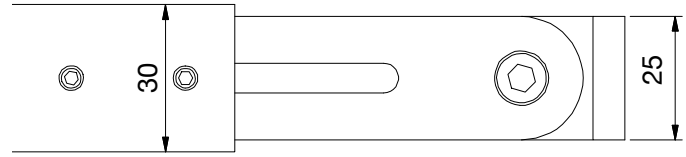

glass thickness: 8-10 mm



	article no.	finish	article description
	8475MS7-370	gloss chrome	stabilizer-bar glass-glassl
	8475MSPVD22-370	stainless steel optic	adjustable from 290-450 mm
	8475MS7-500	gloss chrome	stabilizer-bar glass-glass
	8475MSPVD22-500	stainless steel optic	adjustable from 420-580 mm
	8475MS7-630	gloss chrome	stabilizer-bar glass-glass
	8475MSPVD22-630	stainless steel optic	adjustable from 550-710 mm
	8475MS7-760	gloss chrome	stabilizer-bar glass-glass
	8475MSPVD22-760	stainless steel optic	adjustable from 680-840 mm
	8475MS7-890	gloss chrome	stabilizer-bar glass-glass
	8475MSPVD22-890	stainless steel optic	adjustable from 810-970 mm
	8475MS7-1020	gloss chrome	stabilizer-bar glass-glass
	8475MSPVD22-1020	stainless steel optic	adjustable from 940-1100 mm
	8475MS7-1150	gloss chrome	stabilizer-bar glass-glass
	8475MSPVD22-1150	stainless steel optic	adjustable from 1070-1230 mm
	8475MS7-1250	gloss chrome	stabilizer-bar glass-glass
	8475MSPVD22-1250	stainless steel optic	adjustable from 1170-1330 mm*
	8475MS7-1380	gloss chrome	stabilizer-bar glass-glass
	8475MSPVD22-1380	stainless steel optic	adjustable from 1300-1460 mm*
	8475MS7-1510	gloss chrome	stabilizer-bar glass-glass
	8475MSPVD22-1510	stainless steel optic	adjustable from 1430-1590 mm*
	8475MS7-1640	gloss chrome	stabilizer-bar glass-glass
	8475MSPVD22-1640	stainless steel optic	adjustable from 1560-1720 mm*
	8475MS7-1770	gloss chrome	stabilizer-bar glass-glass
	8475MSPVD22-1770	stainless steel optic	adjustable from 1690-1850 mm*
	8475MS7-1900	gloss chrome	stabilizer-bar glass-glass
	8475MSPVD22-1900	stainless steel optic	adjustable from 1820-1980 mm*

*Pipe cut (cut line visible).
tube subdivided (visible parting line)

stabilizer-bar - single parts, square

MADE IN GERMANY

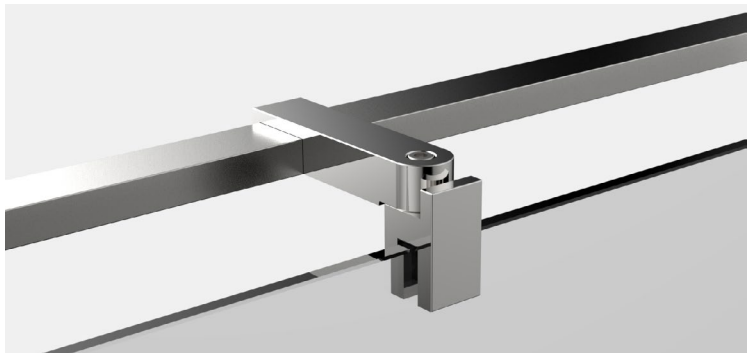

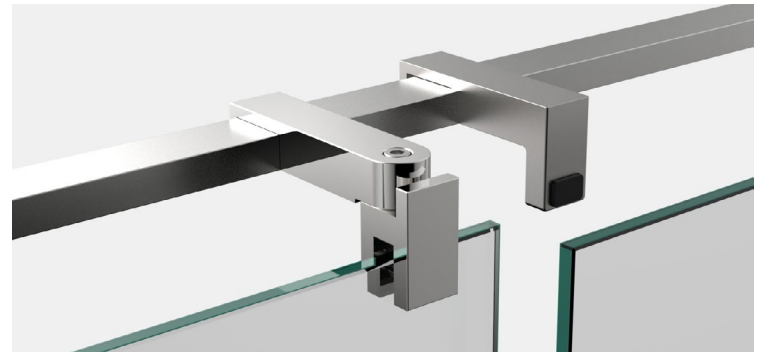

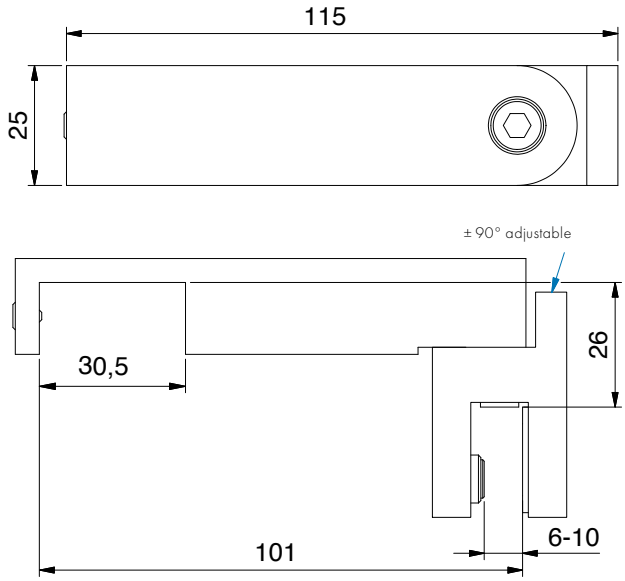

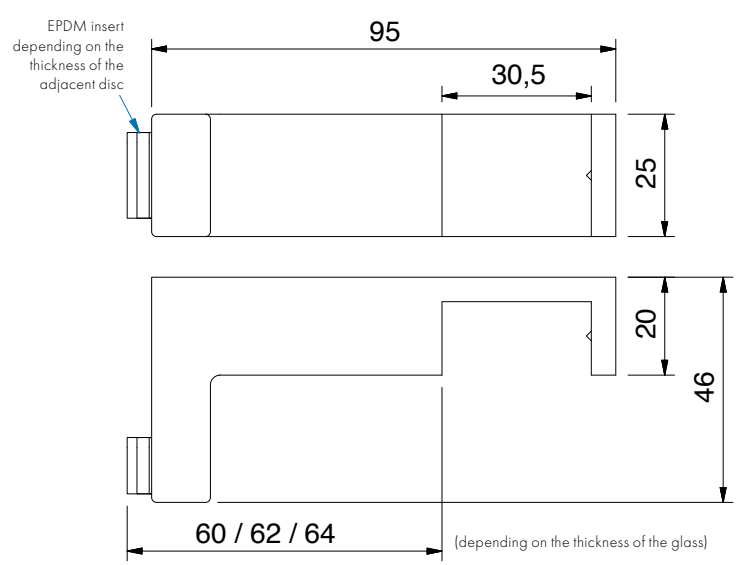



T-adapter for 8474MS, 8475MS und 8477MS

article no.	glass thickness
8476__-T	6 - 10 mm

1/1

finish	
MS7	gloss chrome
MSPVD22	stainless steel optic



t-adapter striker bracket for 8474MS, 8475MS and 8477MS (door stop)

article no.
8491__

1/1

finish	
MS7	gloss chrome

stabilizer-bar - single parts, square

MADE IN GERMANY

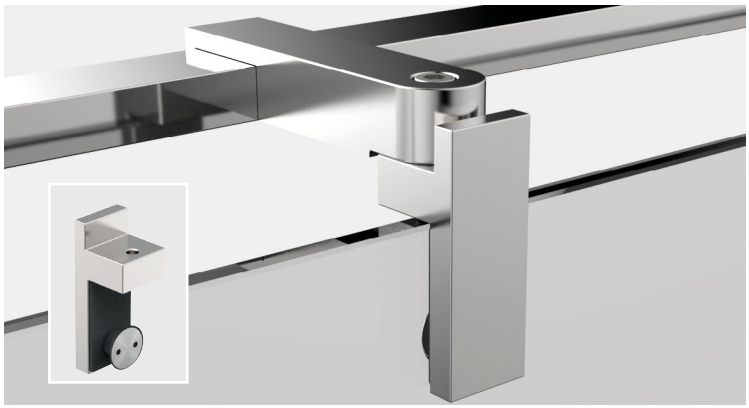



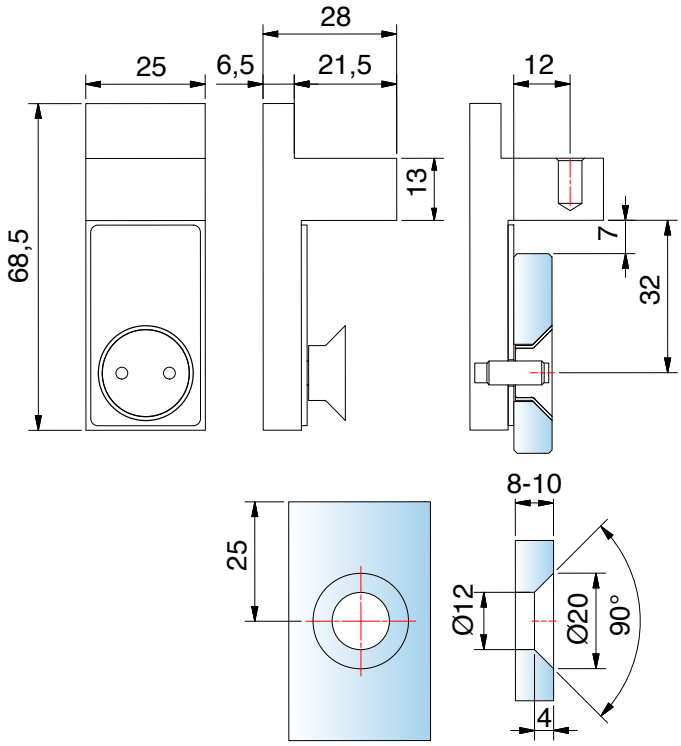

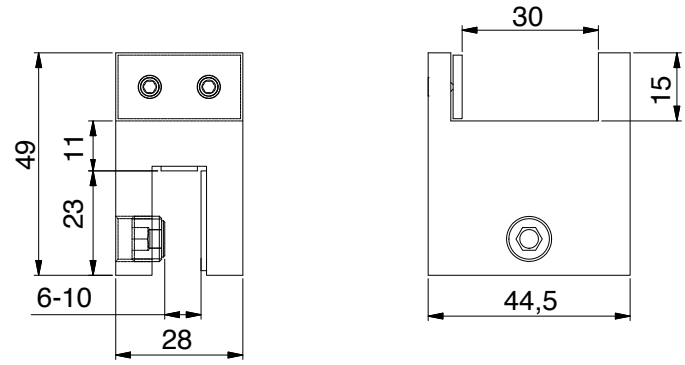



fixing set flush for 8474MS, 8475MS and 8477MS, extended, suitable for lifting hardware

article no.	glass thickness
8444__-V180	8 - 10 mm

finish

MS7	gloss chrome

glass plate support for 8474MS, 8475MS and 8477MS

article no.	glass thickness
8448__-G	6 - 10 mm

finish

MS7	gloss chrome

stabilizer-bar sets, round

MADE IN GERMANY

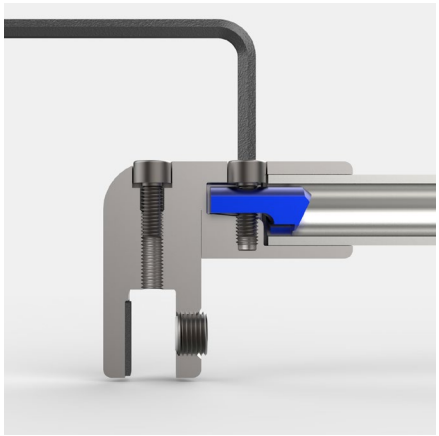

The adjustable stabiliser bar systems have been developed from scratch and, thanks to the new clamping technology, offer greater stability and easier installation.

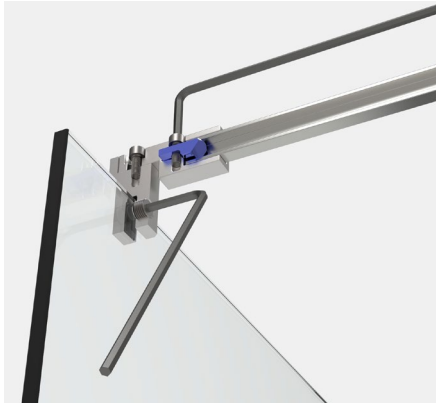

new clamp technique

The internal clamp is pressed against the tube by means of an hexagon socket screw

simplified assembly

All screws on the individual supports, as well as on the complete bars can be fastened with one hex key.

Note

To ensure the **shower is stable**, we recommend that the adjustable round or square stabilising bar should **not be longer than 1200 mm**. A shower with a rail system does not provide the same level of stability as a shower enclosure with a **stabilising bar and T-piece** once it reaches a size of **approximately 1000 mm.**

Please take into account when planning!



stabilizer-bar sets, round

MADE IN GERMANY





Wall mounting with a **movable connection**

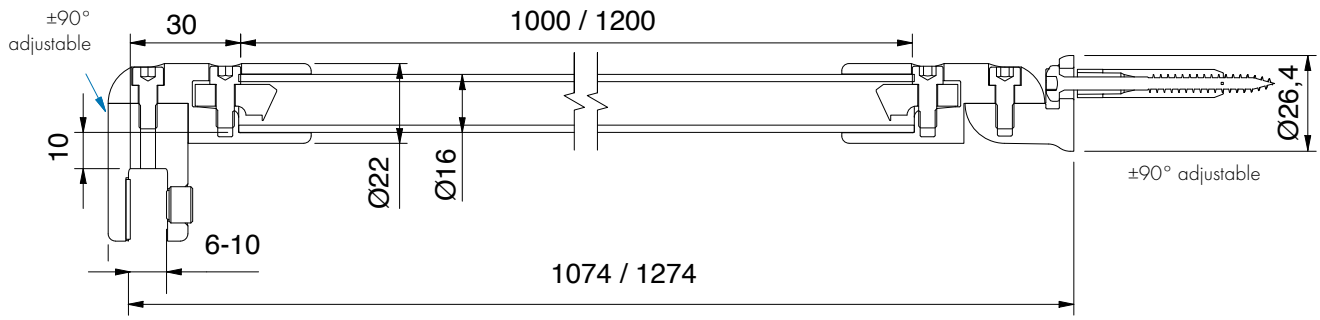

	article no.	finish	glass thickness	length	article description
	8744ZN5-1000	gloss chrome	6-10 mm	1000 mm	stabilizer-bar set, glass-wall
	8744ZN1-1000	matt chrome		1000 mm	wall connection rotatable
	8744ZNPVD20-1000	gold optic		1000 mm	
	8744ZNPVD22-1000	stainless steel optic		1000 mm	
	8744ZN134-1200	white matt		1200 mm	
	8744ZN135-1000	deep black matt		1000 mm	
	8744ZNPVD39-1200	gold bronze brushed		1200 mm	
	8744ZNPVD40-1200	gold optic brushed		1200 mm	
	8744ZNPVD41-1200	copper optic brushed		1200 mm	
	8744ZNPVD42-1200	graphite metal optic brushed		1200 mm	



stabilizer-bar sets, round

MADE IN GERMANY

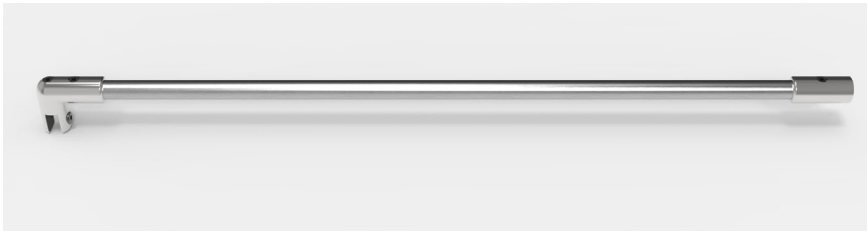



Wall mounting with a **fixed connection**

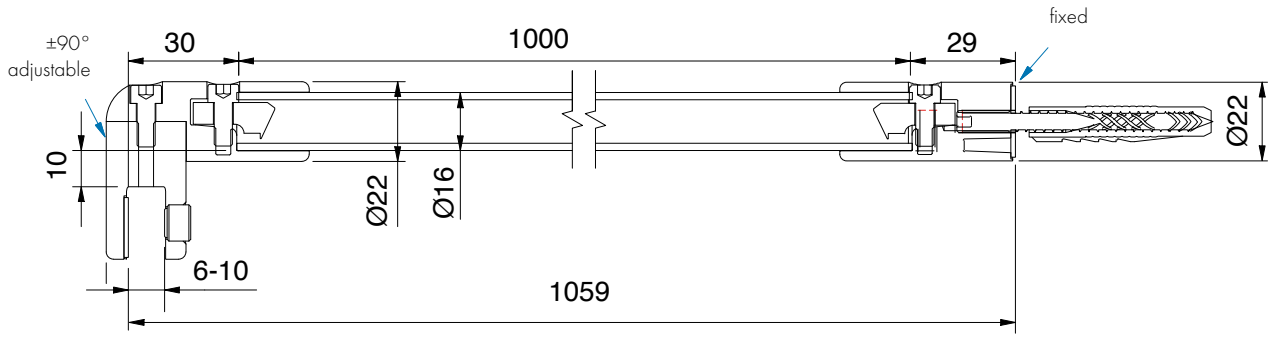

	article no.	finish	glass thickness	length	article description
	8743ZN5-1000	Holder, gloss chrome-plated/Tube, polished gloss anodized	6-10 mm	1000 mm	stabilizer-bar set, glass-wall
	8743ZN135-1000	deep black matt		1000 mm	wall mounting with a fixed connection



stabilizer-bar sets, round

MADE IN GERMANY



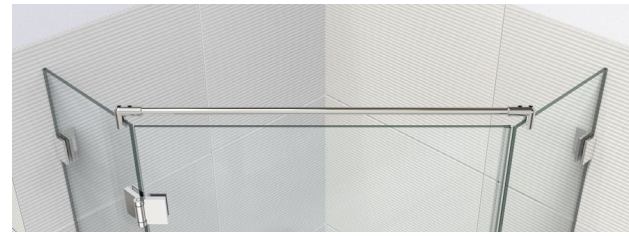

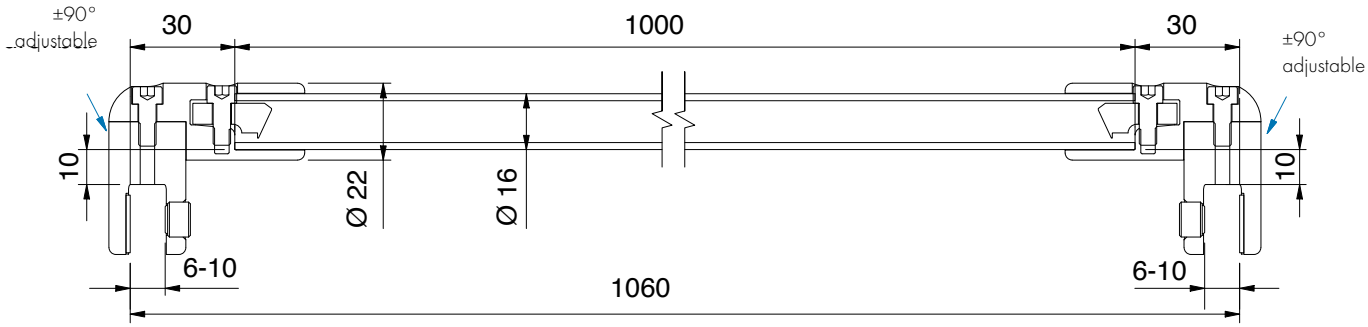

article no.	finish	glass thickness	length	article description	
8745ZN5-1000	Holder, gloss chrome-plated/Tube, polished gloss anodized	6-10 mm	1000 mm	stabilizer-bar set, glass-glass	1/1





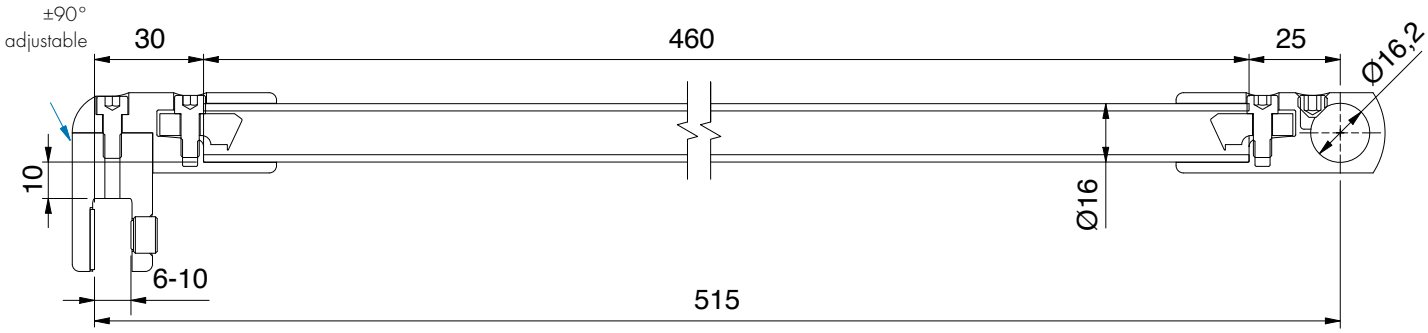

article no.	finish	glass thickness	length	article description	
8747ZN5-460	Holder, gloss chrome-plated/Tube, polished gloss anodized	6-10 mm	1000 mm	stabilizer-bar set, glass-T-adapter	1/1

stabilizer-bar sets, round

MADE IN GERMANY



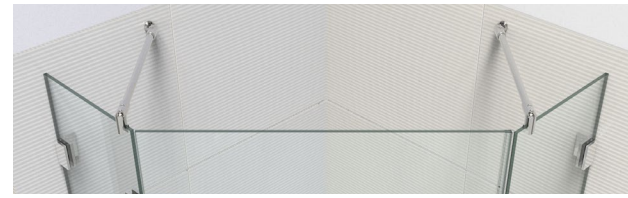

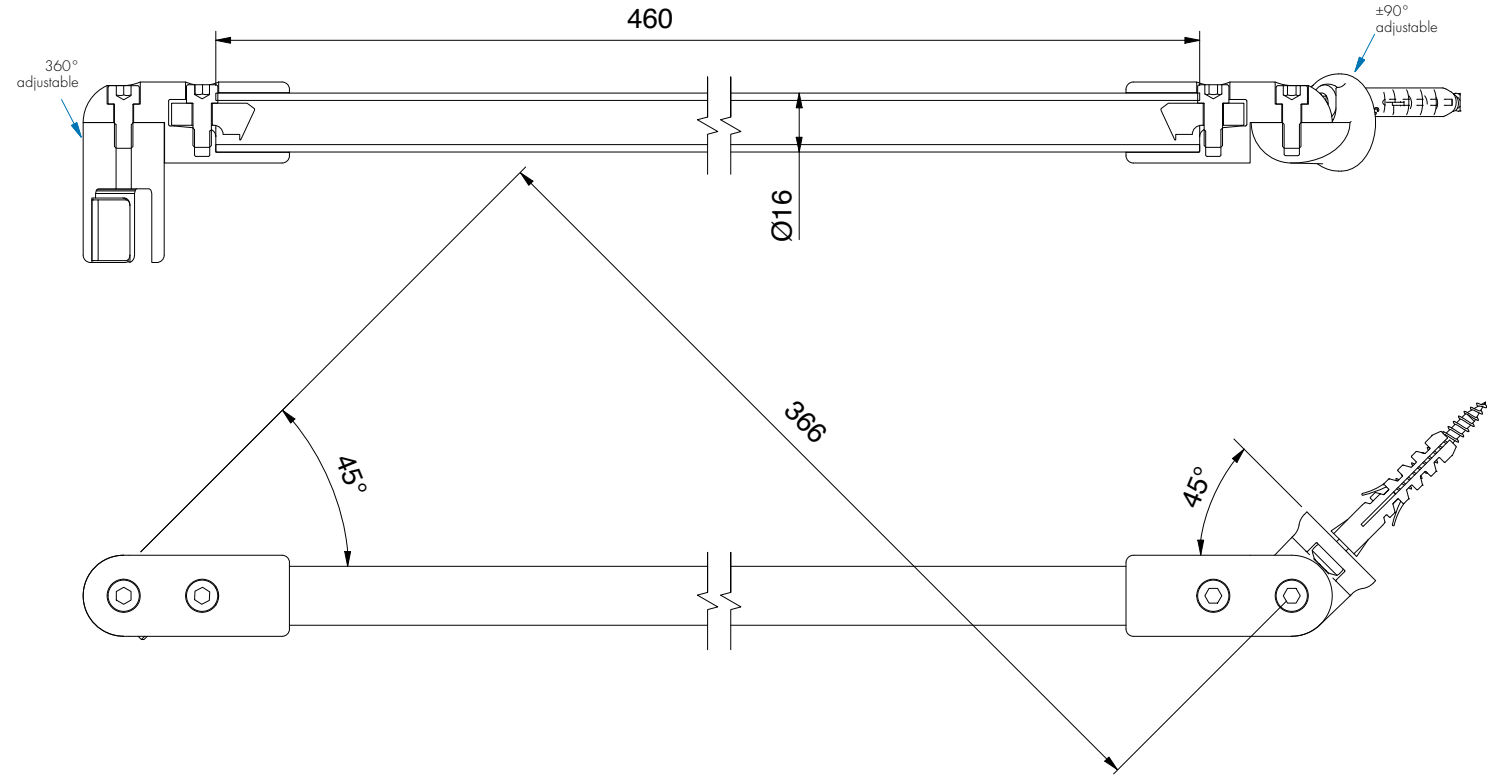

	article no.	finish	glass thickness	length	article description
	8746ZN5-460	Holder, gloss chrome-plated/Tube, polished gloss anodized	6-10 mm	460 mm	stabilizer-bar set, glass-wall 45°

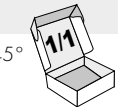

stabilizer-bar sets, round

MADE IN GERMANY

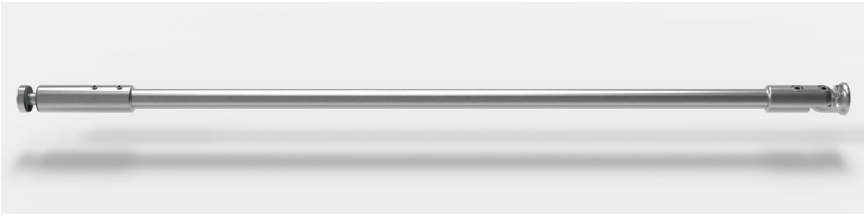

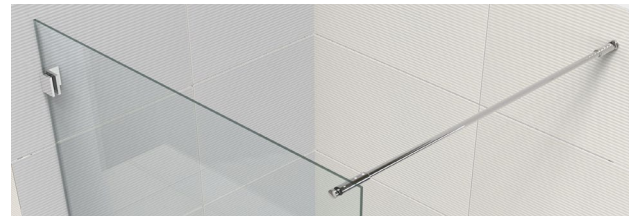

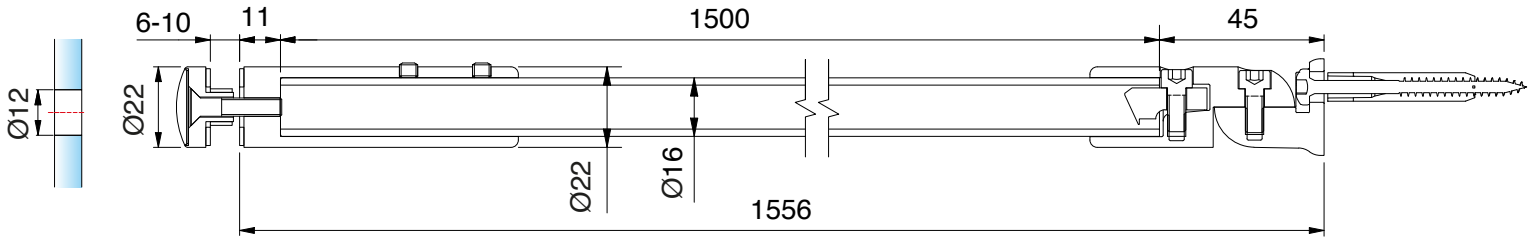

	article no.	finish	glass thickness	length	article description
	8748ZN5-1500	Holder, gloss chrome-plated/Tube, polished gloss anodized	6-10 mm	460 mm	stabilizer-bar set, with glass support





Note:
To ensure the shower is stable, we recommend that the adjustable round or square stabilising bar is no longer than 1200 mm. Please bear the following in mind when planning:
Once a certain size is exceeded, a shower with a railing system does not offer the same stability as a shower enclosure with a stabilising bar and T-piece.

stabilizer-bar - single parts, round

MADE IN GERMANY

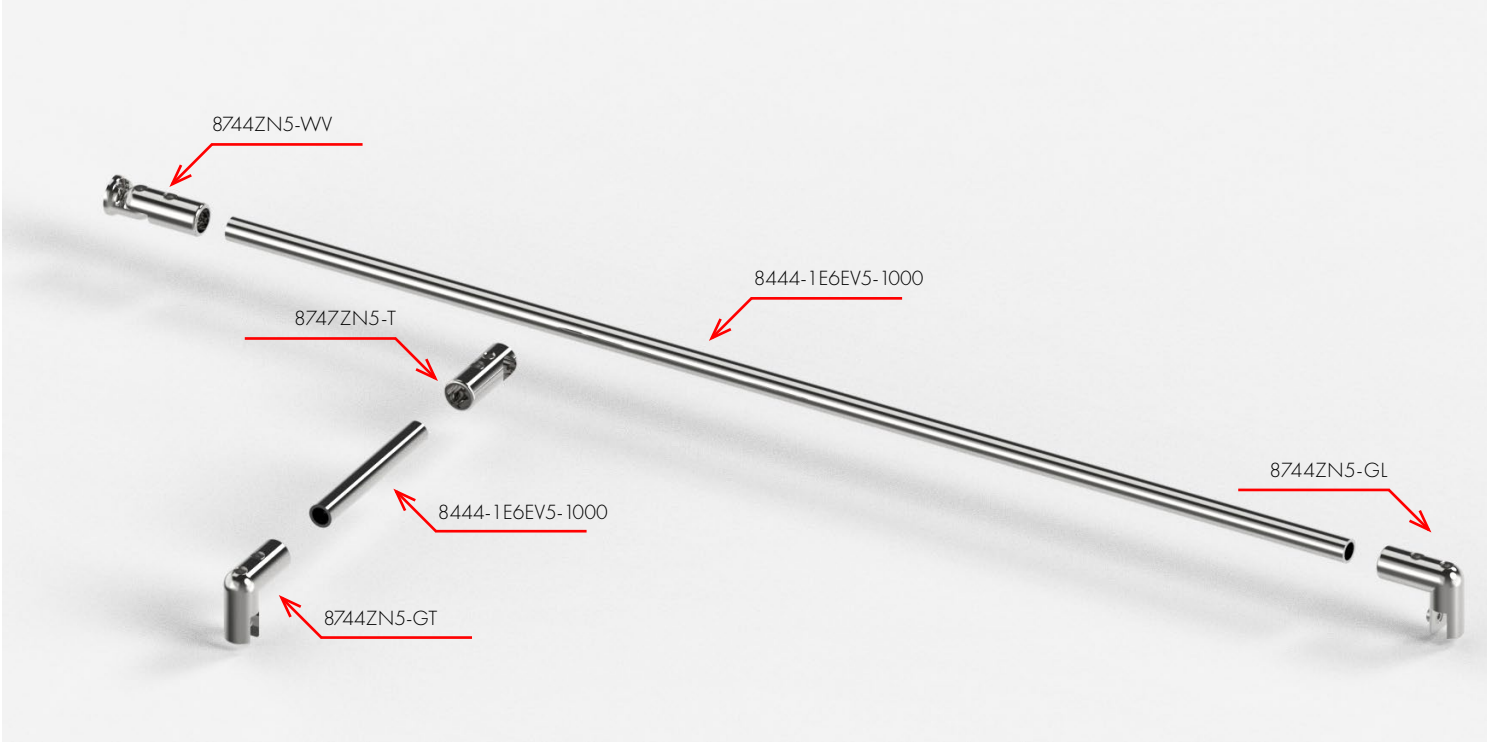



8744ZN5-WV



8744ZN5-GL



8747ZN5-T



8444-1E6EV5-1000

stabilizer-bar, round - Tube for stabilizer-bar 8444

MADE IN GERMANY

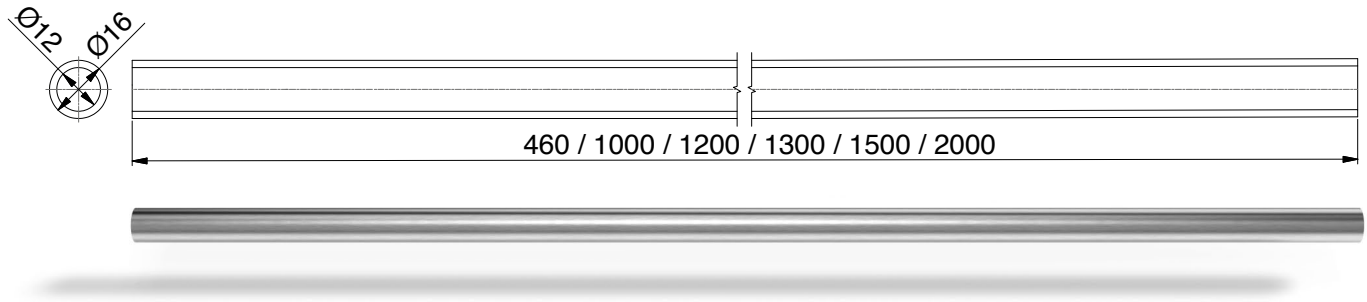

article no.	finish	length	material	suitable connections
8444-1E123-460	stainless steel optic	460 mm	Aluminium	ZNPVD22
8444-1E123-1000	stainless steel optic	1000 mm	Aluminium	ZNPVD22
8444-1E123-1500	stainless steel optic	1500 mm	Aluminium	ZNPVD22
8444-1E123-2000	stainless steel optic	2000 mm	Aluminium	ZNPVD22
8444-1E6EV5-460	pickled aluminum polished and anodized	460 mm	Aluminium	ZN5
8444-1E6EV5-1000	pickled aluminum polished and anodized	1000 mm	Aluminium	ZN5
8444-1E6EV5-1200	pickled aluminum polished and anodized	1200 mm	Aluminium	ZN5
8444-1E6EV5-1500	pickled aluminum polished and anodized	1500 mm	Aluminium	ZN5
8444-1E6EV5-2000	pickled aluminum polished and anodized	2000 mm	Aluminium	ZN5
8444-1E6EV1-1000	aluminum optic (anodised silver)	1000 mm	Aluminium	ZN1
8444-1E6EV1-1500	aluminum optic (anodised silver)	1500 mm	Aluminium	ZN1
8444-1E6EV1-2000	aluminum optic (anodised silver)	2000 mm	Aluminium	ZN1
8444-1MS7-1300	gloss chrome	1300 mm	Brass	ZN5
8444-1E6C35-1000	deep black matt	1000 mm	Aluminium	ZN135
8444-1E6C35-1200	deep black matt	1200 mm	Aluminium	ZN135
8444-1E6C35-1500	deep black matt	1500 mm	Aluminium	ZN135
8444-1E6C35-2000	deep black matt	2000 mm	Aluminium	ZN135
8744-1VAPVD39-1200	gold bronze brushed	1200 mm	Stainless Steel	ZNPVD39
8744-1VAPVD40-1200	gold optic brushed	1200 mm	Stainless Steel	ZNPVD40
8744-1VAPVD41-1200	copper optic brushed	1200 mm	Stainless Steel	ZNPVD41
8744-1VAPVD42-1200	graphite metal optic brushed	1200 mm	Stainless Steel	ZNPVD42

You will find instructions for determining the cut lengths from p.604

stabilizer-bar - single parts, round

MADE IN GERMANY





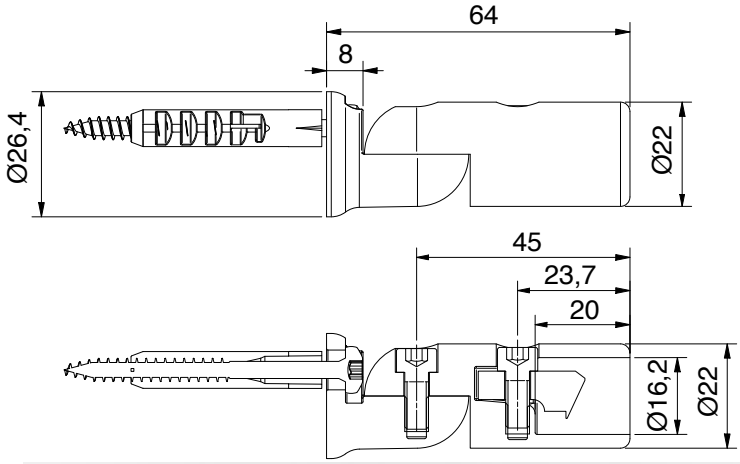

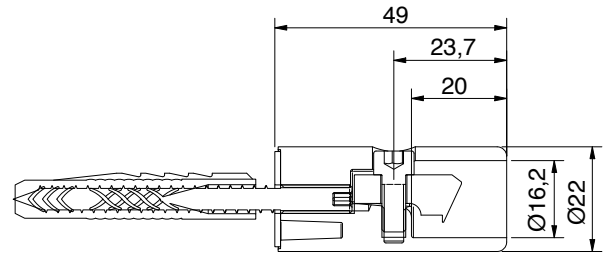

for tube Ø 16 mm



for tube Ø 16 mm



wall adapter ±90° adjustable

1/1

article no.
8744ZN__-WV

finish		
	ZN5	gloss chrome
	ZN1	matt chrome
	ZNPVD22	stainless steel optic
	ZN135	deep black matt
	ZNPVD39	gold bronze brushed
	ZNPVD40	gold optic brushed
	ZNPVD41	copper optic brushed
	ZNPVD42	graphite metal optic brushed

wall adapter, fixed

1/1

article no.
8744ZN__-W

finish		
	ZN5	gloss chrome
	ZN135	deep black matt

stabilizer-bar - single parts, round

MADE IN GERMANY

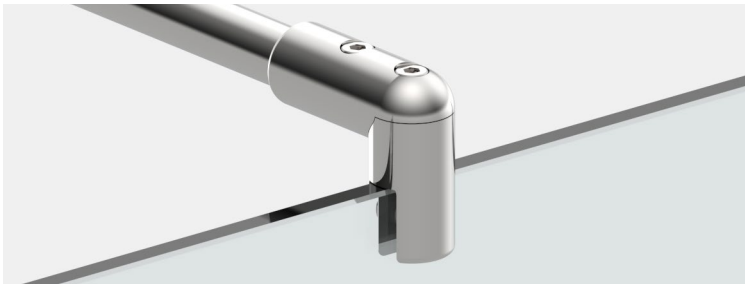

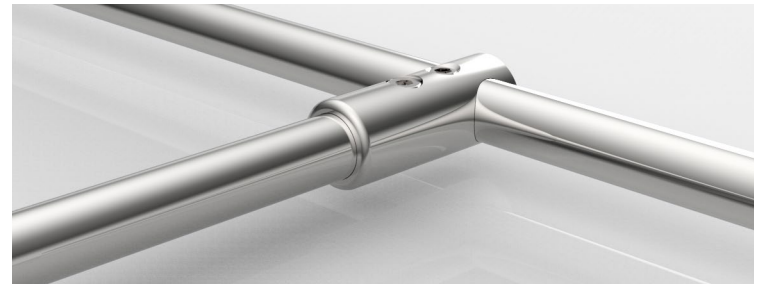

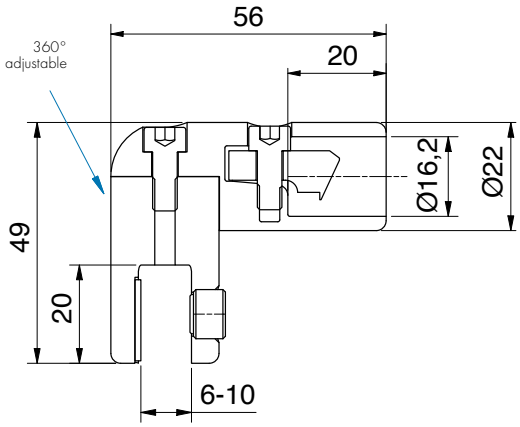

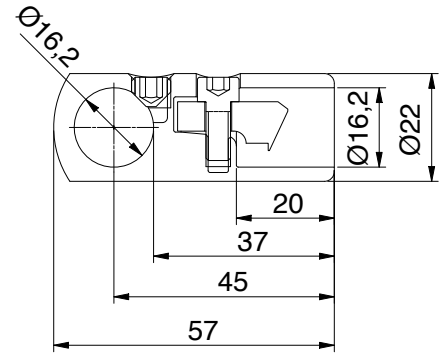

for tube Ø 16 mm



for tube Ø 16 mm



glass adapter ±90° adjustable

article no.	glass thickness
8744ZN__-GL	6 - 10 mm

1/1

finish	
ZN5	gloss chrome
ZN1	matt chrome
ZNPVD22	stainless steel optic
ZN135	deep black matt
ZNPVD39	gold bronze brushed
ZNPVD40	gold optic brushed
ZNPVD41	copper optic brushed
ZNPVD42	graphite metal optic brushed

T-Connector

article no.
8747ZN__-T

1/1

finish	
ZN5	gloss chrome
ZN1	matt chrome
ZNPVD22	stainless steel optic
ZN135	deep black matt

stabilizer-bar - single parts, round

MADE IN GERMANY

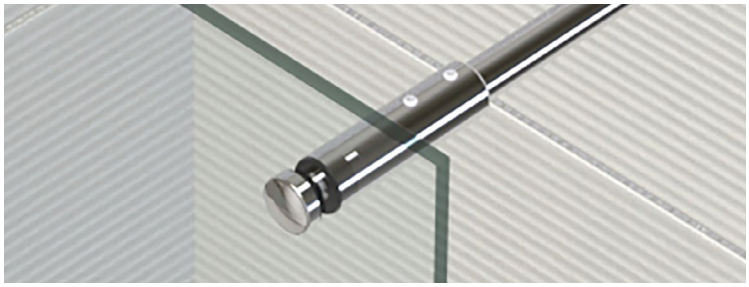

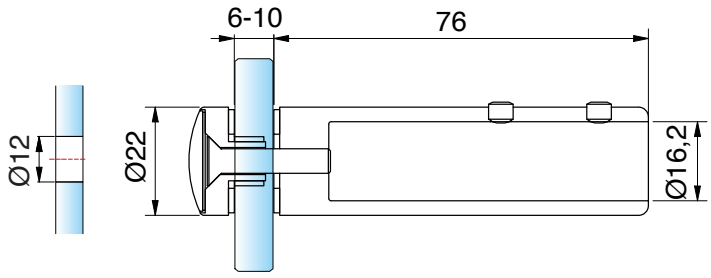



glass adapter for stabilizer-bar

article no.	glass thickness
8448MS-G	6 - 10 mm



finish	
MS7	gloss chrome
MS135	deep black matt

Stabilizing bars, round - **Cutting the tube lengths to size - Wall-Glass**

MADE IN GERMANY

To cut the stabilizing bar tube to the correct length, you will find specific measurement guidelines for various situations here.
Clearance width (LW) | Tube cut length (ZR)

Set: 8744ZN__-1000 / -1200

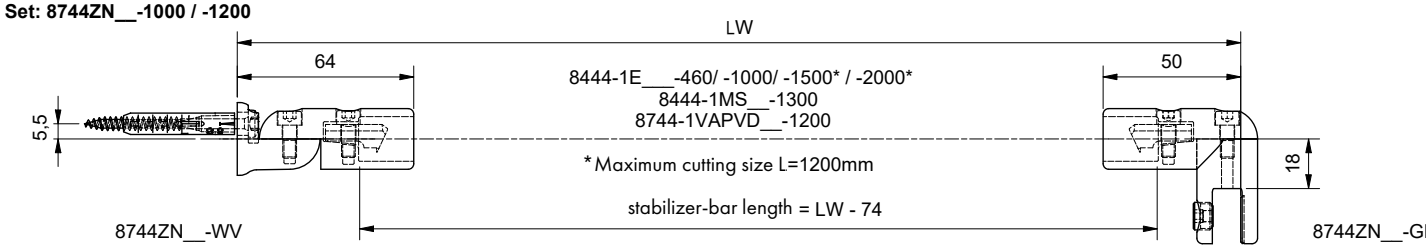

Set: 8743ZN__-1000

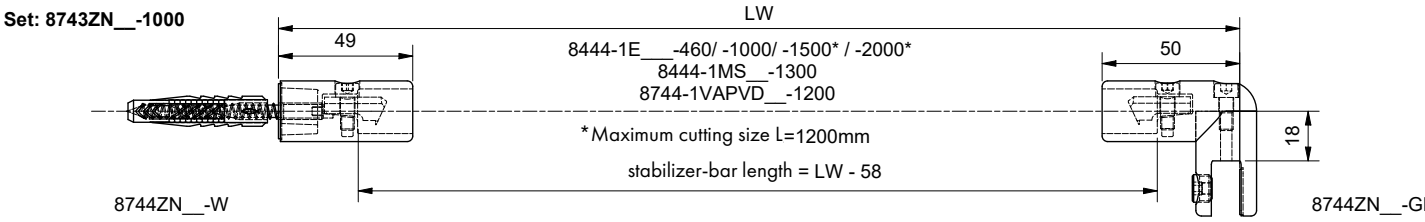



Stabilizing bars, round - **Cutting the tube lengths to size - Wall-Glass**

MADE IN GERMANY

To cut the stabilizing bar tube to the correct length, you will find specific measurement guidelines for various situations here.
Clearance width (LW) | Tube cut length (ZR)

Set: 8747ZN5-460

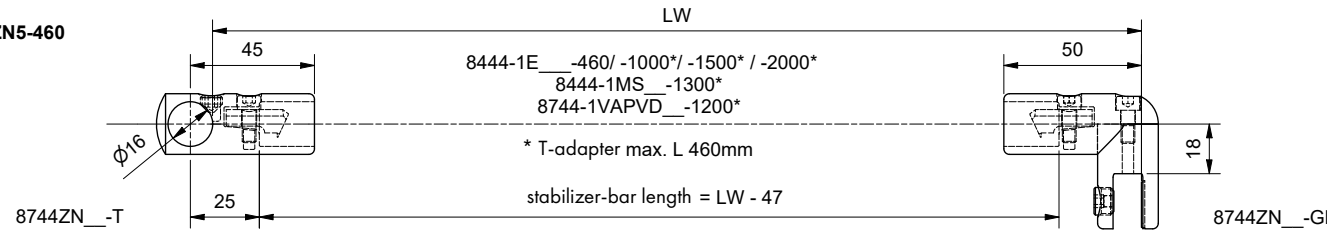

Set: 8745ZN__-1000

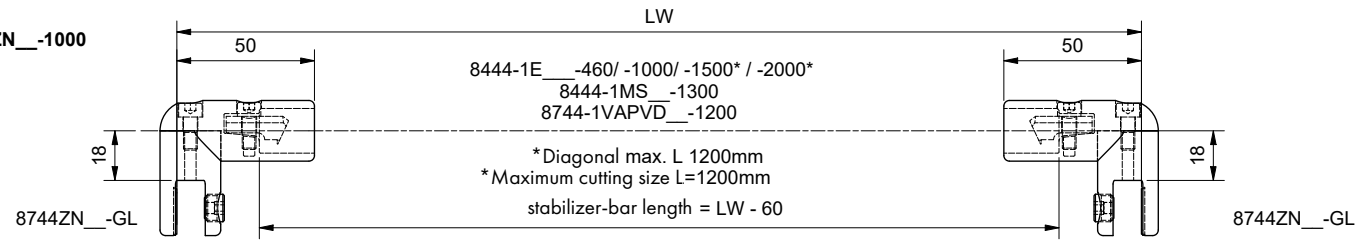



Note:
To ensure the shower is stable, we recommend that the adjustable round or square stabilising bar is no longer than 1200 mm. Please bear the following in mind when planning:
Once a certain size is exceeded, a shower with a railing system does not offer the same stability as a shower enclosure with a stabilising bar and T-piece.

stabilizer-bar - railing single parts, round

MADE IN GERMANY

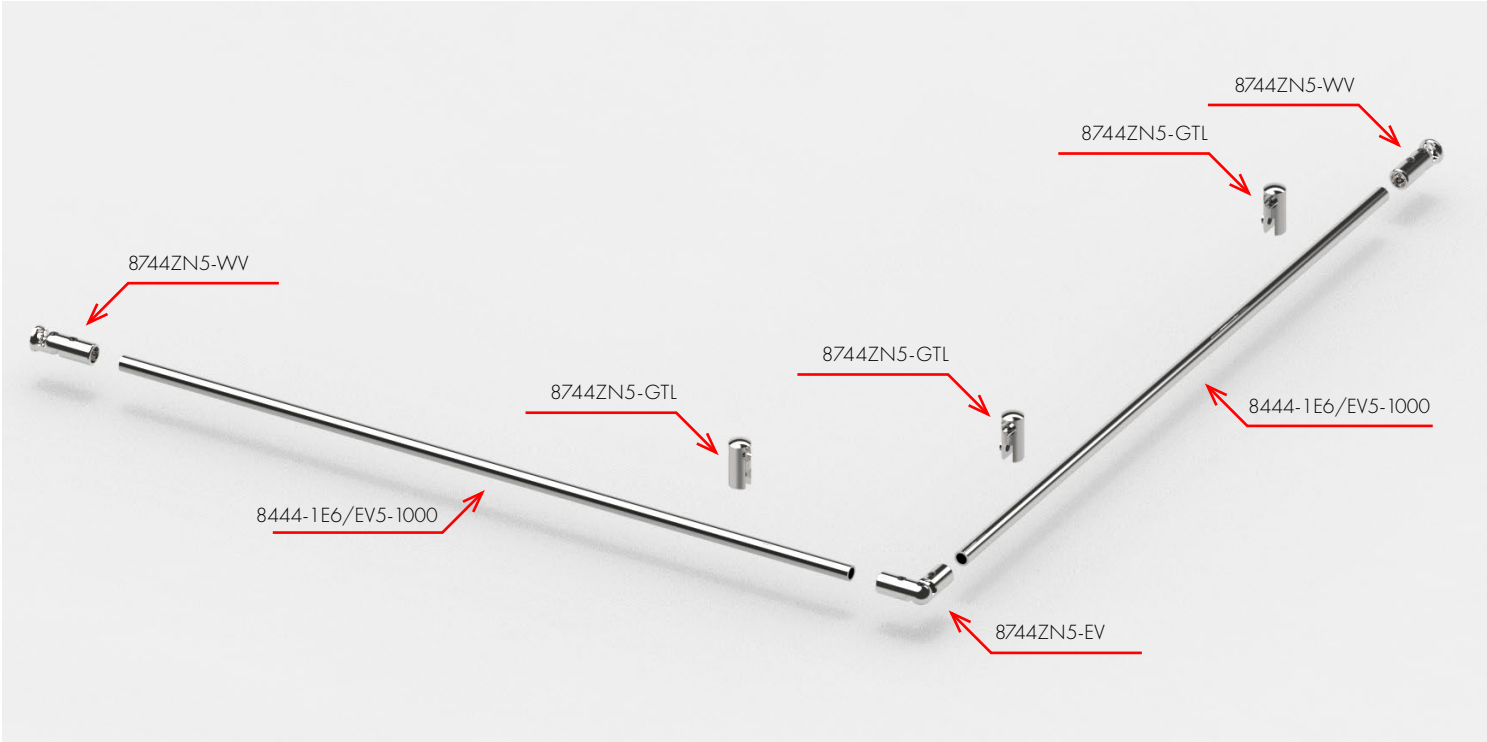



8744ZN5-WV



8744ZN5-GTL



8747ZN5-EV



8444-1E6/EV5-1000

stabilizer-bar, round - Tube for stabilizer-bar 8444

MADE IN GERMANY

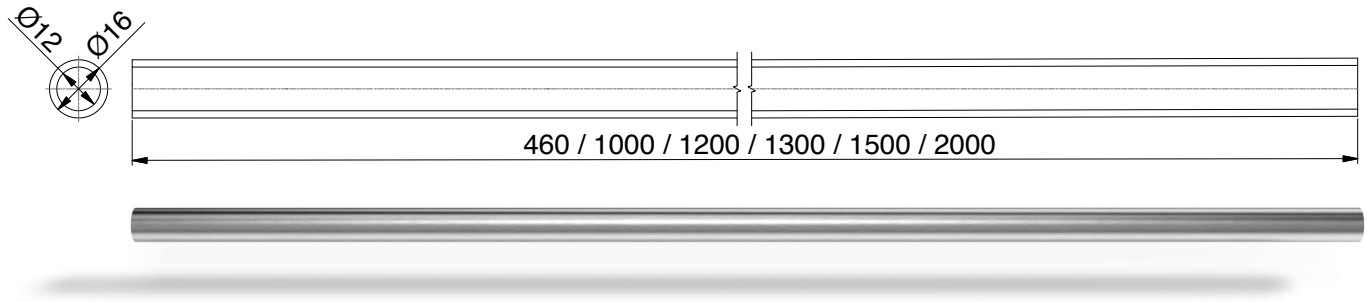

	article no.	finish	length	material	suitable connections
	8444-1E123-460	stainless steel optic	460 mm	Aluminium	ZNPVD22
	8444-1E123-1000	stainless steel optic	1000 mm	Aluminium	ZNPVD22
	8444-1E123-1500	stainless steel optic	1500 mm	Aluminium	ZNPVD22
	8444-1E123-2000	stainless steel optic	2000 mm	Aluminium	ZNPVD22
	8444-1E6EV5-460	pickled aluminum polished and anodized	460 mm	Aluminium	ZN5
	8444-1E6EV5-1000	pickled aluminum polished and anodized	1000 mm	Aluminium	ZN5
	8444-1E6EV5-1200	pickled aluminum polished and anodized	1200 mm	Aluminium	ZN5
	8444-1E6EV5-1500	pickled aluminum polished and anodized	1500 mm	Aluminium	ZN5
	8444-1E6EV5-2000	pickled aluminum polished and anodized	2000 mm	Aluminium	ZN5
	8444-1E6EV1-1000	aluminum optic (anodised silver)	1000 mm	Aluminium	ZN1
	8444-1E6EV1-1500	aluminum optic (anodised silver)	1500 mm	Aluminium	ZN1
	8444-1E6EV1-2000	aluminum optic (anodised silver)	2000 mm	Aluminium	ZN1
	8444-1MS7-1300	gloss chrome	1300 mm	Brass	ZN5
	8444-1E6C35-1000	deep black matt	1000 mm	Aluminium	ZN135
	8444-1E6C35-1200	deep black matt	1200 mm	Aluminium	ZN135
	8444-1E6C35-1500	deep black matt	1500 mm	Aluminium	ZN135
	8444-1E6C35-2000	deep black matt	2000 mm	Aluminium	ZN135
	8744-1VAPVD39-1200	gold bronze brushed	1200 mm	Stainless Steel	ZNPVD39
	8744-1VAPVD40-1200	gold optic brushed	1200 mm	Stainless Steel	ZNPVD40
	8744-1VAPVD41-1200	copper optic brushed	1200 mm	Stainless Steel	ZNPVD41
	8744-1VAPVD42-1200	graphite metal optic brushed	1200 mm	Stainless Steel	ZNPVD42

You will find instructions for determining the cut lengths from p.604

stabilizer-bar - railing single parts, round

MADE IN GERMANY





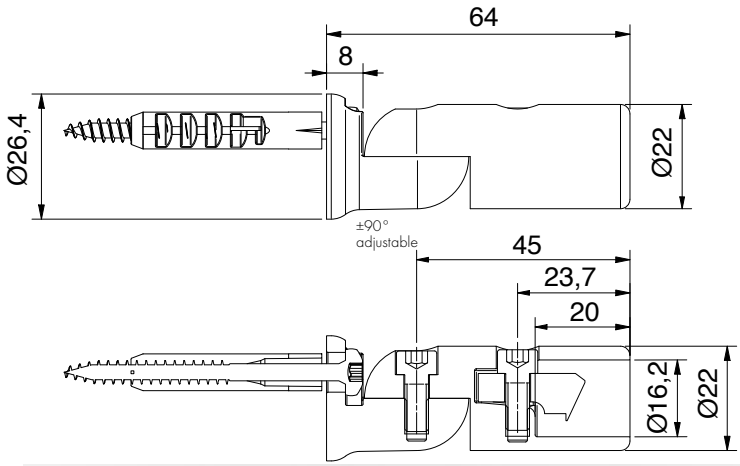

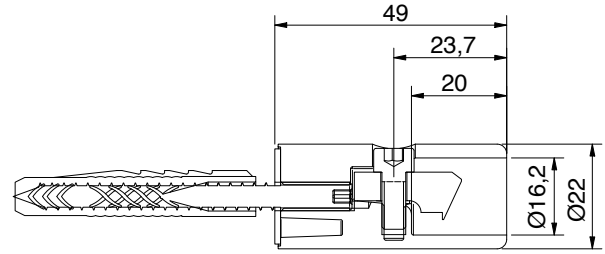





wall adapter ±90° adjustable		
article no.		
8744ZN__-WV		
finish		
	ZN5	gloss chrome
	ZN1	matt chrome
	ZNPVD22	stainless steel optic
	ZN135	deep black matt
	ZNPVD39	gold bronze brushed
	ZNPVD40	gold optic brushed
	ZNPVD41	copper optic brushed
	ZNPVD42	graphite metal optic brushed

wall adapter, fixed		
article no.		
8744ZN__-W		
finish		
	ZN5	gloss chrome
	ZN135	deep black matt

stabilizer-bar - railing single parts, round

MADE IN GERMANY



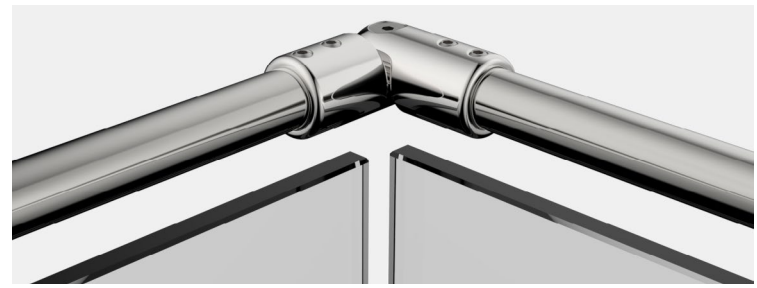

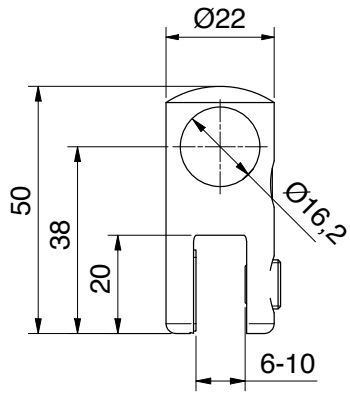

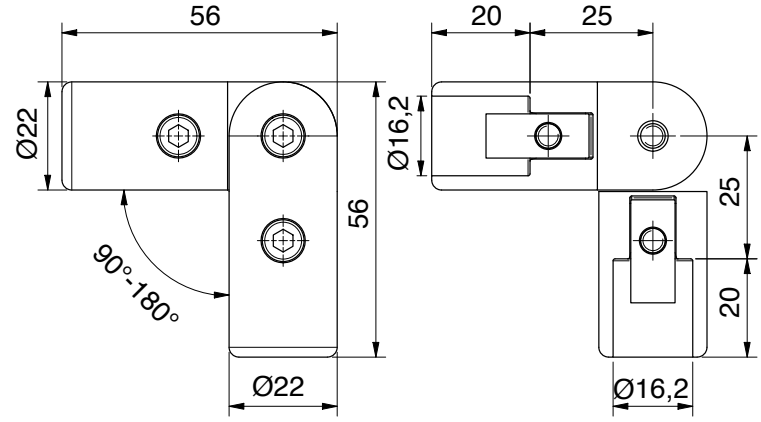

for tube Ø 16 mm



glass T-adapter

article no.	glass thickness
8744ZN__-GTL	6-10 mm

1/1

finish		
	ZN5	gloss chrome
	ZN1	matt chrome
	ZNPVD22	stainless steel optic
	ZN135	deep black matt

for tube Ø 16 mm



corner connector ±90°, adjustable

article no.
8744ZN__-EV

1/1

finish		
	ZN5	gloss chrome
	ZN1	matt chrome
	ZNPVD22	stainless steel optic
	ZN135	deep black matt

stabilizer-bar - railing single parts, round

MADE IN GERMANY



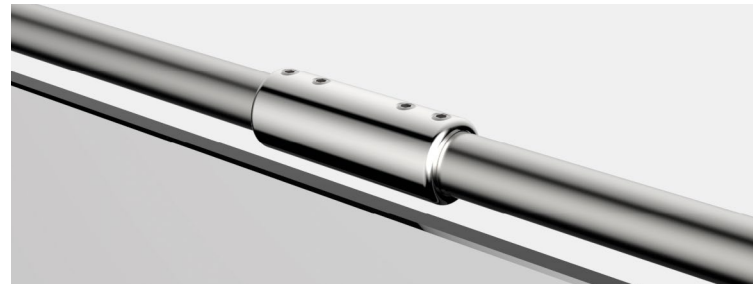

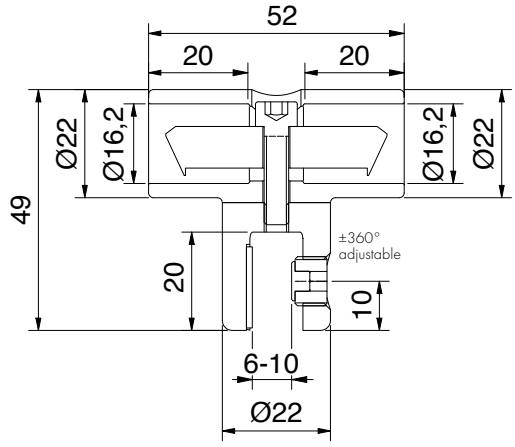

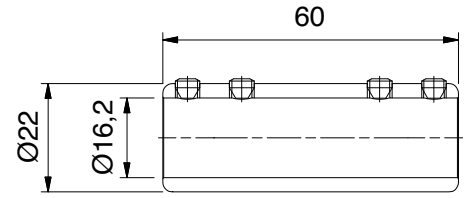

for tube Ø 16 mm



glass T-adapter, side panel, double sided



article no.	glass thickness
8747ZN__-TS	6 - 10 mm

finish		
	ZN5	gloss chrome
	ZN1	matt chrome
	ZNPVD22	stainless steel optic
	ZN135	deep black matt

for tube Ø 16 mm



tube connector 180°



article no.
8444MS__-V180

finish		
	MS7	gloss chrome
	MS135	deep black matt

stabilizer-bar - adjustable, round

MADE IN GERMANY

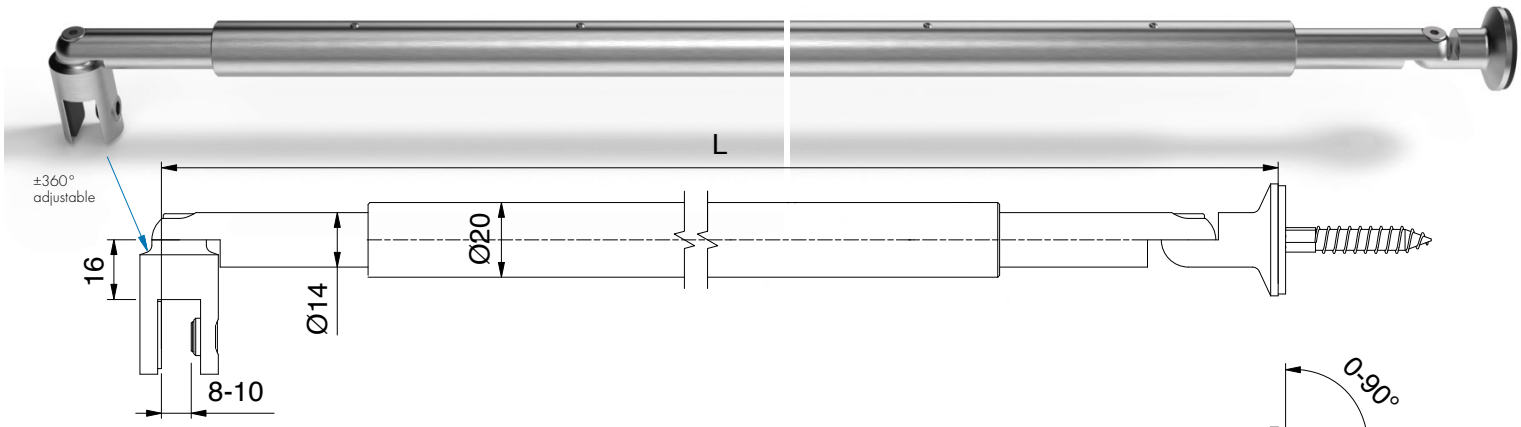

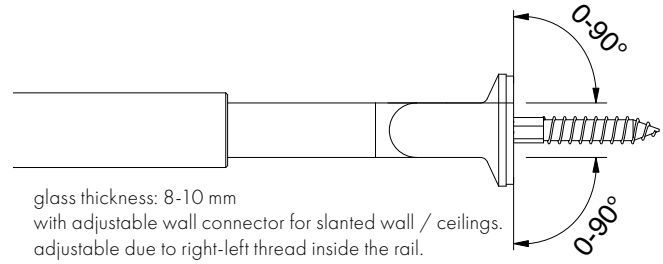

glass thickness: 8-10 mm
with adjustable wall connector for slanted wall / ceilings.
adjustable due to right-left thread inside the rail.



	article no.	finish	article description
	8432MS7-395	gloss chrome	stabilizer-bar glass-wall adjustable from 365–425 mm
	8432MS7-590	gloss chrome	stabilizer-bar glass-wall
	8432MSPVD22-590*	stainless steel optic	adjustable from 510–670 mm
	8432MS7-730	gloss chrome	stabilizer-bar glass-wall adjustable from 650–810 mm
	8432MS7-860	gloss chrome	stabilizer-bar glass-wall
	8432MSPVD22-860*	stainless steel optic	adjustable from 780–940 mm
	8432MS7-990	gloss chrome	stabilizer-bar glass-wall
	8432MSPVD22-990*	stainless steel optic	adjustable from 910–1070 mm
	8432MS7-1050	gloss chrome	stabilizer-bar glass-wall
	8432MSPVD22-1050*	stainless steel optic	adjustable from 970-1130 mm
	8432MS7-1190	gloss chrome	stabilizer-bar glass-wall adjustable from 1110-1270 mm
	8432MS7-1330	gloss chrome	stabilizer-bar glass-wall adjustable from 1250-1410 mm **
	8432MS7-1460	gloss chrome	stabilizer-bar glass-wall adjustable from 1380-1540 mm **
	8432MS7-1590	gloss chrome	stabilizer-bar glass-wall adjustable from 1510-1670 mm **
	8432MS7-1720	gloss chrome	stabilizer-bar glass-wall adjustable from 1640-1800 mm **
	8432MS7-1850	gloss chrome	stabilizer-bar glass-wall adjustable from 1770-1930 mm **



*article discontinued

**tube subdivided (visible parting line), other length upon request!

stabilizer-bar - adjustable, round

MADE IN GERMANY

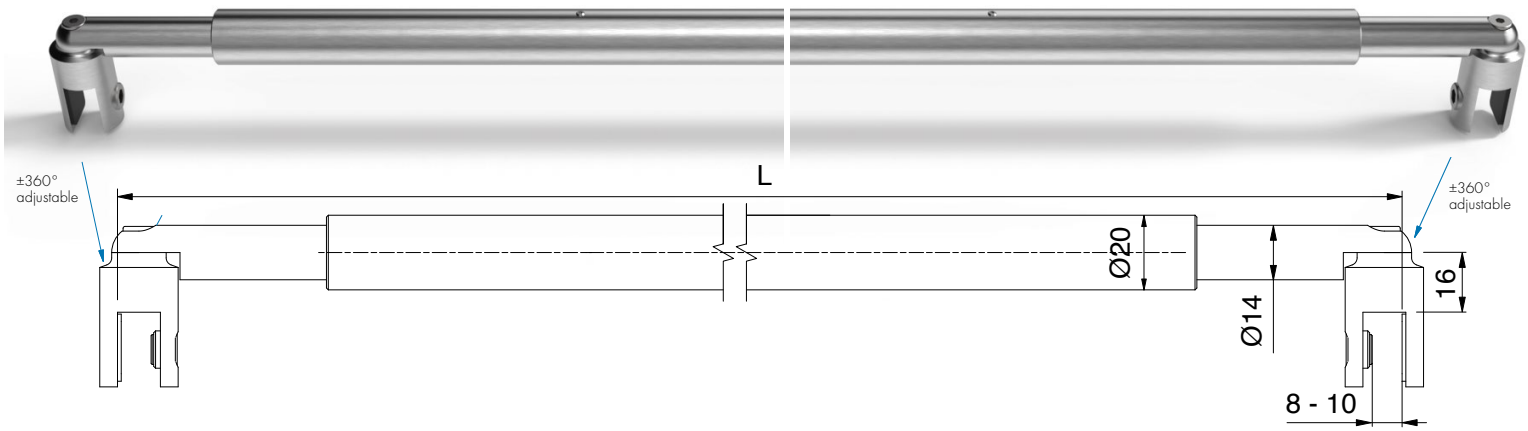

glass thickness: 8-10 mm
adjustable due to right-left thread inside the rail.

	article no.	finish	article description
	8434MS7-375	gloss chrome	stabilizer-bar glass-glass adjustable from 345–405 mm
	8434MS7-570	gloss chrome	stabilizer-bar glass-glass adjustable from 490–650 mm
	8434MS7-710	gloss chrome	stabilizer-bar glass-glass adjustable from 630–790 mm
	8434MS7-840	gloss chrome	stabilizer-bar glass-glass adjustable from 760–920 mm
	8434MS7-970	gloss chrome	stabilizer-bar glass-glass adjustable from 890–1050 mm
	8434MS7-1030	gloss chrome	stabilizer-bar glass-glass adjustable from 950-1110 mm
	8434MS7-1170	gloss chrome	stabilizer-bar glass-glass adjustable from 950-1110 mm
	8434MS7-1310	gloss chrome	stabilizer-bar glass-glass adjustable from 1230-1390 mm **
	8434MS7-1440	gloss chrome	stabilizer-bar glass-glass adjustable from 1360-1520 mm **
	8434MS7-1570	gloss chrome	stabilizer-bar glass-glass adjustable from 1490-1650 mm **
	8434MS7-1700	gloss chrome	stabilizer-bar glass-glass adjustable from 1620-1780 mm **
	8434MS7-1830	gloss chrome	stabilizer-bar glass-glass adjustable from 1750-1910 mm **

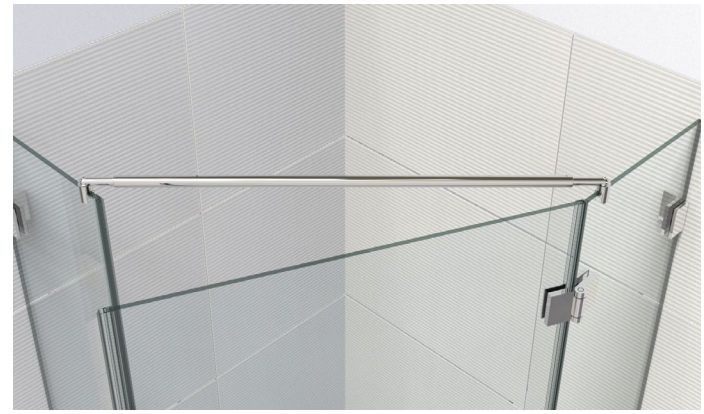

*article discontinued

**tube subdivided (visible parting line), other length upon request!

stabilizing shower shelf

MADE IN GERMANY



shower shelf, glass-wall 90° fixed		
article no.		glass thickness
8209ZN__		8/ 10 mm
Oberfläche		
	ZN5	gloss chrome
	ZN1*	matt chrome
	ZNPVD22*	stainless steel optic
	ZNPVD20*	gold optic
	MS134*	white matt
	MS135	deep black matt
	ZNPVD39*	gold bronze brushed
	ZNPVD40*	gold optic brushed
	ZNPVD41*	copper optic brushed
	ZNPVD42*	graphite metal optic brushed

*article discontinued

dimensiom shower shelf

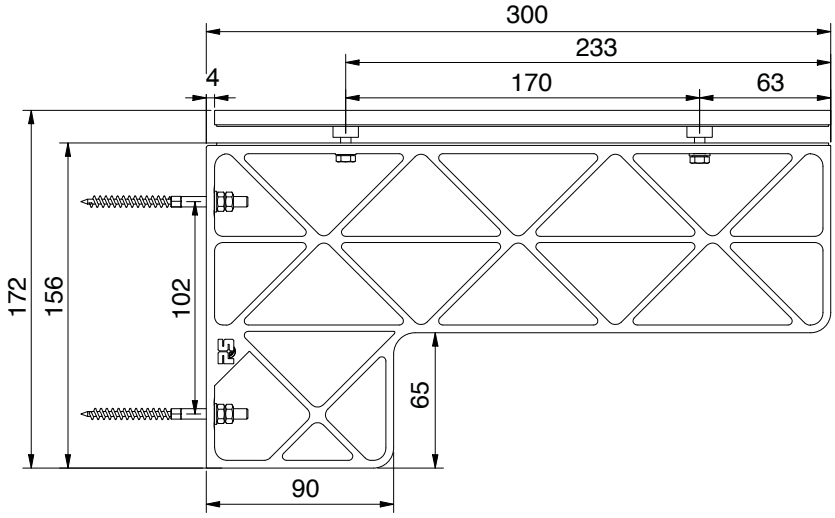

wall processing (for glass rear panels: glass hole Ø10mm)

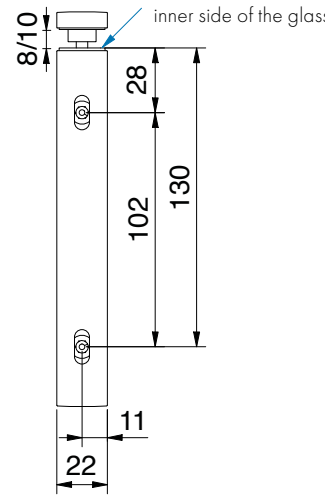

glass processing of side panel

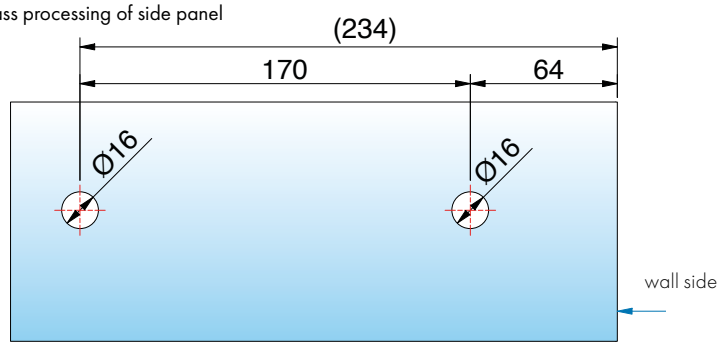

stabilizing shower shelf

MADE IN GERMANY

Inlay in white article no. 8209-4HI-W can be ordered optionally



Inlay in black article no. 8209-4HI-S can be ordered optionally

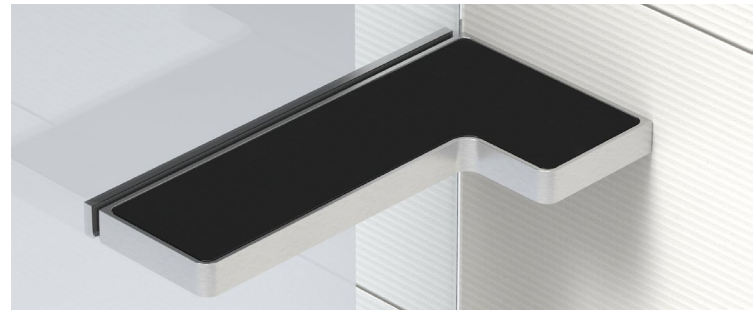

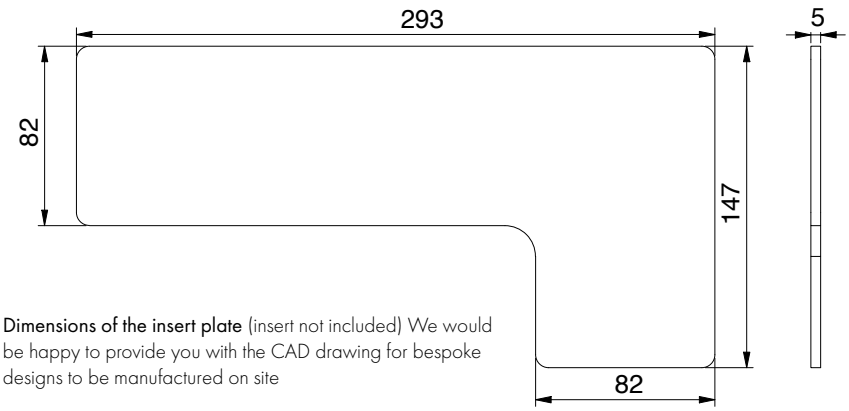

Dimensions of the insert plate (insert not included) We would be happy to provide you with the CAD drawing for bespoke designs to be manufactured on site



Further design ideas for bespoke on-site inserts







stabilizer angle bracket, adjustable - installation situations

MADE IN GERMANY

niche showers

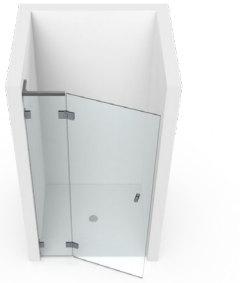

niche showers



corner showers



pentagonal showers



bathtubs





The **adjustable stabilising brackets** (±2°) offer maximum flexibility during installation and allow for precise adaptation to a wide variety of installation scenarios.
This makes it easy to meet individual requirements – ensuring a stable, secure and aesthetically perfect installation. The stabilising brackets are available in **two high-quality versions**, ensuring there is a suitable solution for every project.

You can find recommendations for glass widths starting from page 620

stabilizer angle bracket, glass-wall 180 mm

MADE IN GERMANY

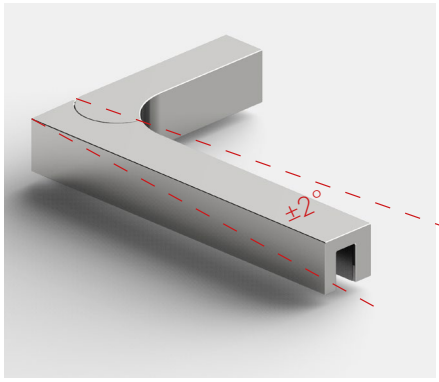





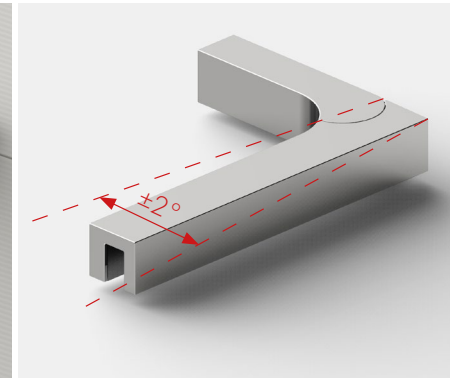

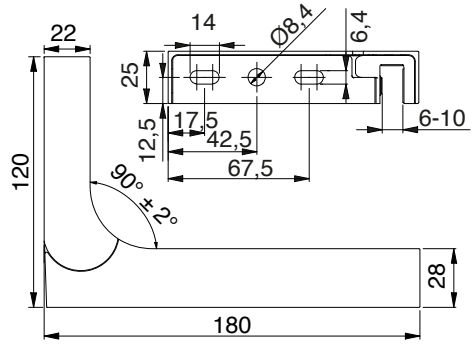

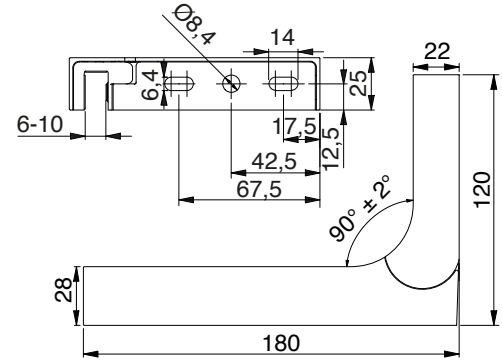

stabilizer angle bracket left, 180 mm, adjustable 90° ± 2°



article no.	glass thickness
8439__L-180	6/8/10 mm

finish		
	ZN5	gloss chrome
	ZN1*	matt chrome
	ZN10*	gloss nickel
	ZNPVD22*	stainless steel optic
	ZNPVD20*	gold optic
	ZNPVD35*	black matt
	ZN134*	white matt
	ZN135	tiefschwarz matt
	ZNPVD39*	gold bronze brushed
	ZNPVD40*	gold optic brushed
	ZNPVD41*	copper optic brushed
	ZNPVD42*	graphite metal optic brushed

stabilizer angle bracket right, 180 mm, adjustable 90° ± 2°

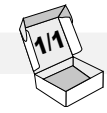

article no.	glass thickness
8439__R-180	6/8/10 mm

finish		
	ZN5	gloss chrome
	ZN1*	matt chrome
	ZN10*	gloss nickel
	ZNPVD22*	stainless steel optic
	ZNPVD20*	gold optic
	ZNPVD35*	black matt
	ZN134*	white matt
	ZN135	tiefschwarz matt
	ZNPVD39*	gold bronze brushed
	ZNPVD40*	gold optic brushed
	ZNPVD41*	copper optic brushed
	ZNPVD42*	graphite metal optic brushed

*article discontinued

stabilizer angle bracket, glass-wall 280 mm

MADE IN GERMANY

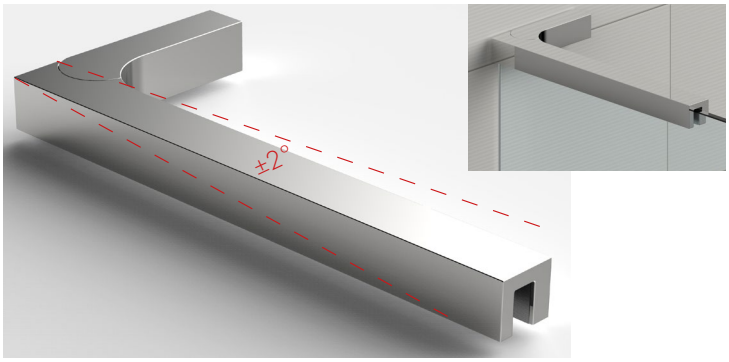

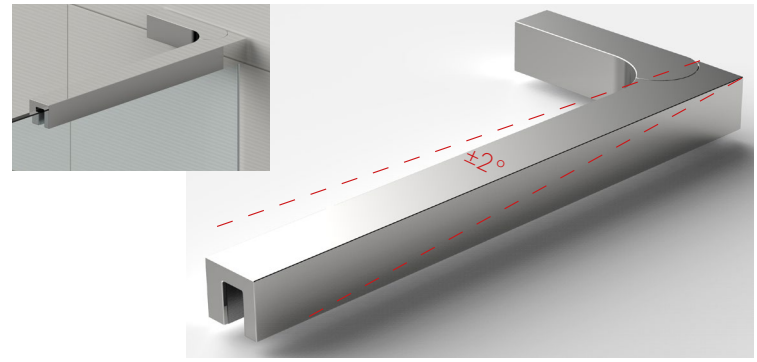

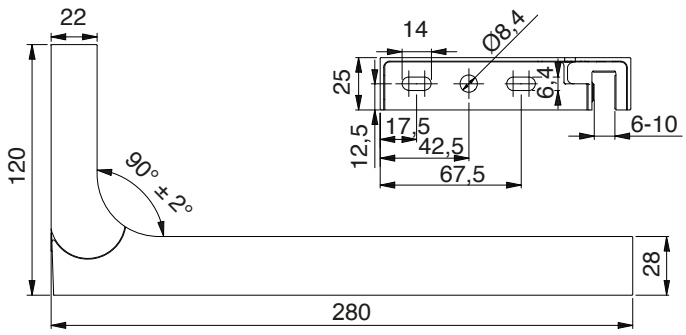

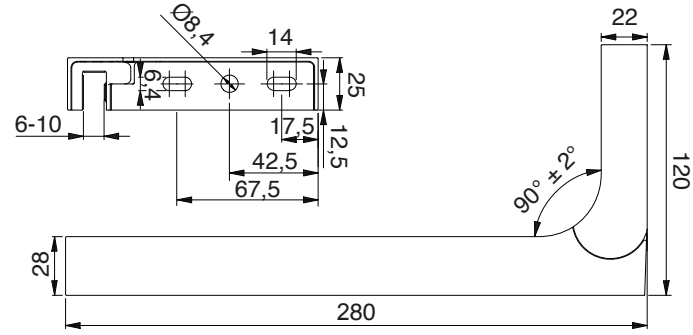

stabilizer angle bracket left, 280 mm, adjustable 90° ± 2°

article no.	glass thickness
8439__L-280	6/8/10 mm

finish		
	ZN5	gloss chrome
	ZN1	matt chrome
	ZN10*	gloss nickel
	ZNPVD22	stainless steel optic
	ZNPVD20	gold optic
	ZNPVD35*	black matt
	ZN134	white matt
	ZN135	tiefschwarz matt
	ZNPVD39	gold bronze brushed
	ZNPVD40	gold optic brushed
	ZNPVD41	copper optic brushed
	ZNPVD42	graphite metal optic brushed

stabilizer angle bracket right, 280 mm, adjustable 90° ± 2°

article no.	glass thickness
8439__R-280	6/8/10 mm

finish		
	ZN5	gloss chrome
	ZN1	matt chrome
	ZN10*	gloss nickel
	ZNPVD22	stainless steel optic
	ZNPVD20	gold optic
	ZNPVD35*	black matt
	ZN134	white matt
	ZN135	tiefschwarz matt
	ZNPVD39	gold bronze brushed
	ZNPVD40	gold optic brushed
	ZNPVD41	copper optic brushed
	ZNPVD42	graphite metal optic brushed

*article discontinued

stabilizer angle bracket, glass-glass

MADE IN GERMANY

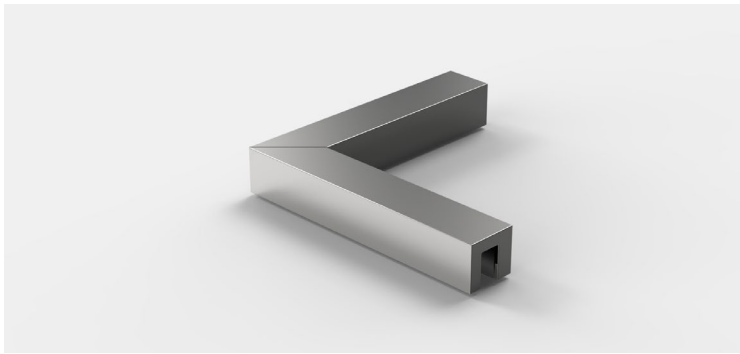

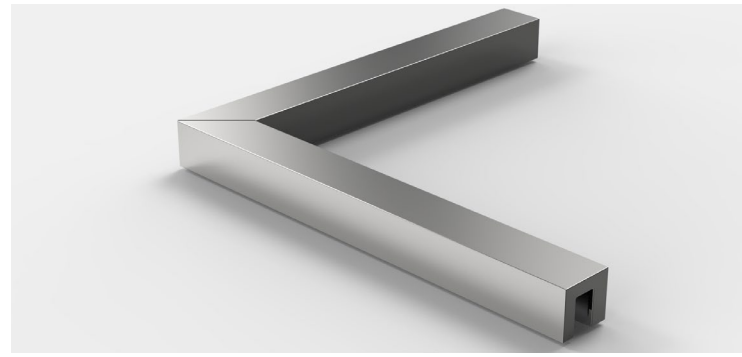

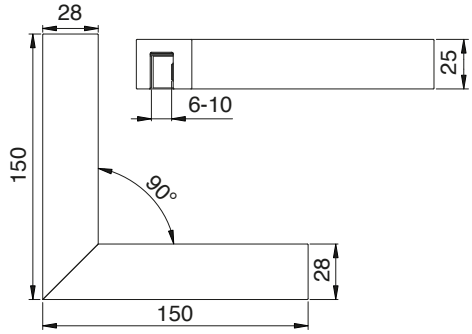

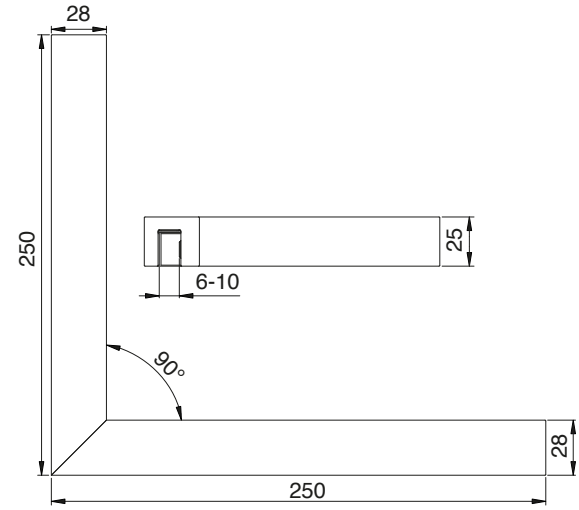

stabilizer angle bracket, glass-glass - 150 mm, 90°

article no.	glass thickness
8438__-150	6/8/10 mm

finish		
	ZN5	gloss chrome
	ZN1	matt chrome
	ZN10*	gloss nickel
	ZNPVD22	stainless steel optic
	ZNPVD20	gold optic
	ZNPVD35*	black matt
	ZN134	white matt
	ZN135	tiefschwarz matt
	ZNPVD39	gold bronze brushed
	ZNPVD40	gold optic brushed
	ZNPVD41	copper optic brushed
	ZNPVD42	graphite metal optic brushed

stabilizer angle bracket, glass-glass - 250 mm, 90°

article no.	glass thickness
8438__-250	6/8/10 mm

finish		
	ZN5*	gloss chrome
	ZN1*	matt chrome
	ZN10*	gloss nickel
	ZNPVD22*	stainless steel optic
	ZNPVD20*	gold optic
	ZNPVD35*	black matt
	ZNPVD39*	gold bronze brushed
	ZNPVD40*	gold optic brushed
	ZNPVD41*	copper optic brushed
	ZNPVD42*	graphite metal optic brushed

*article discontinued

recommendations for glass widths

MADE IN GERMANY

8439ZN_-180

lenght = 180 mm



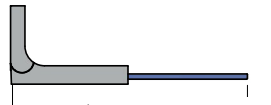

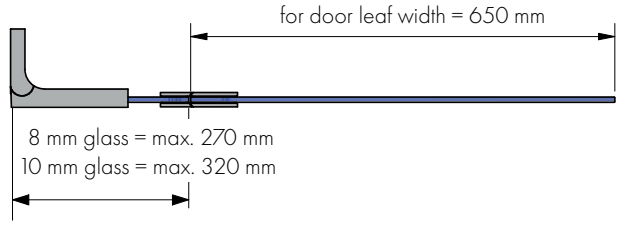

Note: In cases where extensive bracing is required, or where deflection could lead to glass-to-glass contact, bracing should be carried out using stabilising rods at right angles.

8439ZN_-280

lenght = 280 mm

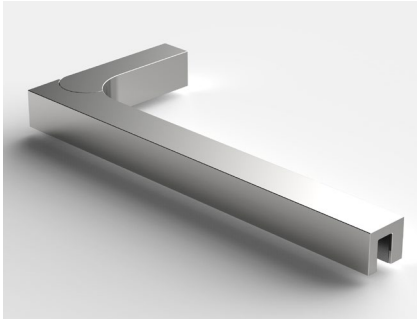

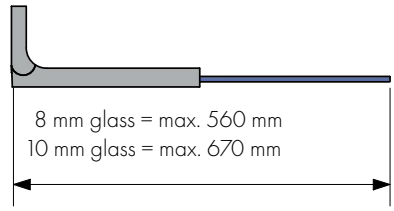

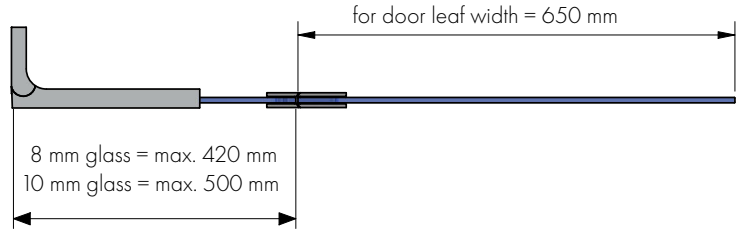

recommendations for glass widths

MADE IN GERMANY

8438ZN_-150

lenght = 150 mm

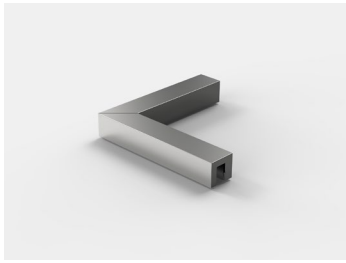

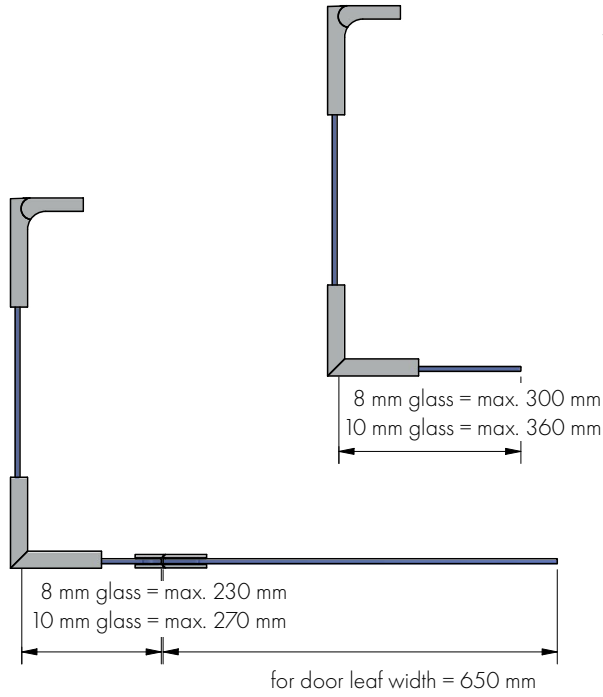

Note: In cases where extensive bracing is required, or where deflection could lead to glass-to-glass contact, bracing should be carried out using stabilising rods at right angles.

8438ZN_-250*

lenght = 250 mm

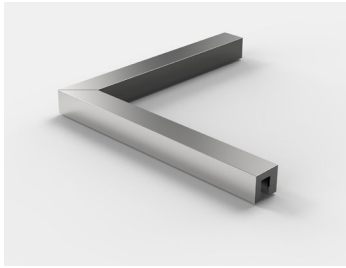

*article discontinued

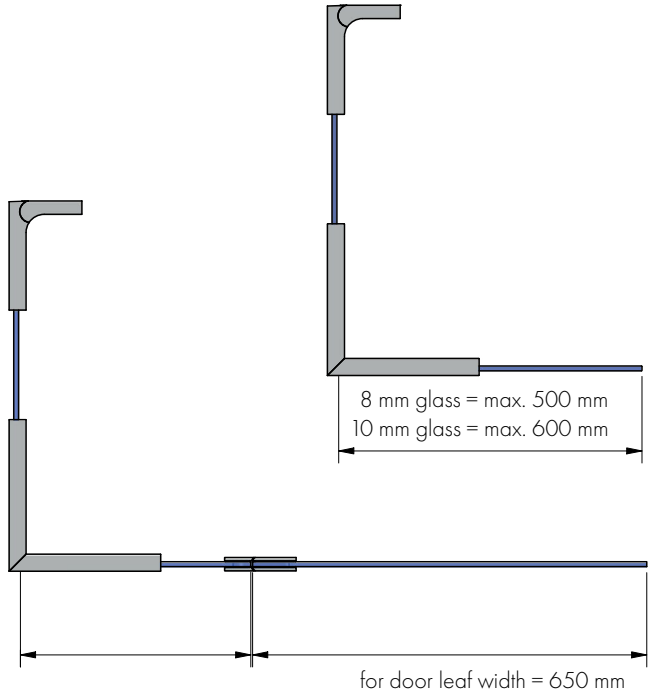

door stop limiter

MADE IN GERMANY

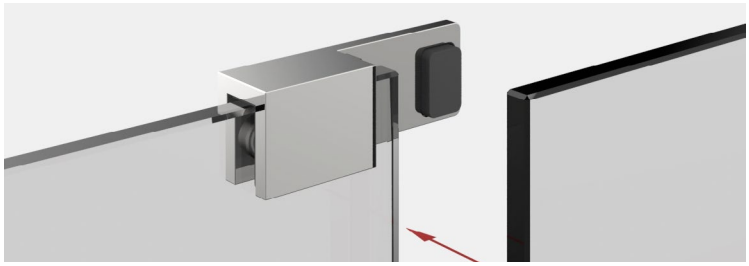

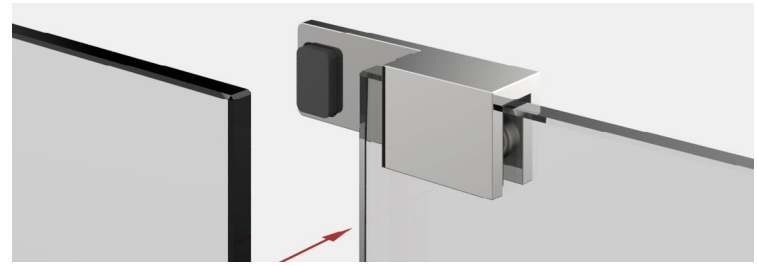

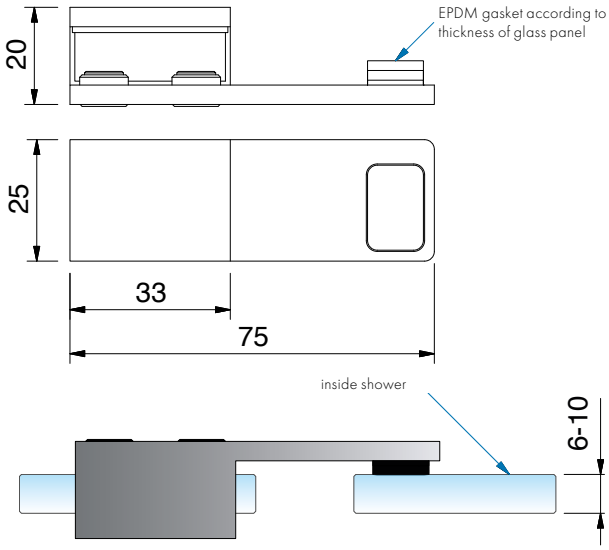

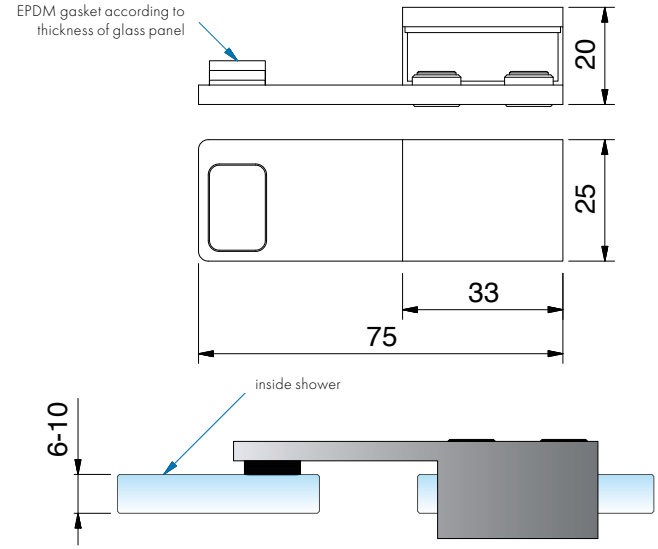

mounted on glass edge
no glass processing

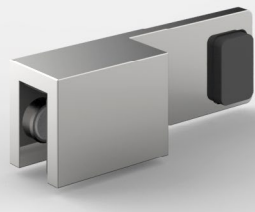

door stop limiter version left (door stop)

article no.	glass thickness
8490__-L	6-10 mm

finish

MS7	gloss chrome
MS10	matt chrome
MSPVD22	stainless steel optic
MSPVD35*	black matt
MS135	deep black matt

mounted on glass edge
no glass processing

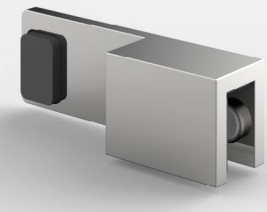

door stop limiter version right (door stop)

article no.	glass thickness
8490__-R	6-10 mm

finish

MS7	gloss chrome
MS10	matt chrome
MSPVD22	stainless steel optic
MSPVD35*	black matt
MS135	deep black matt

* article discontinued

door stop limiter

MADE IN GERMANY

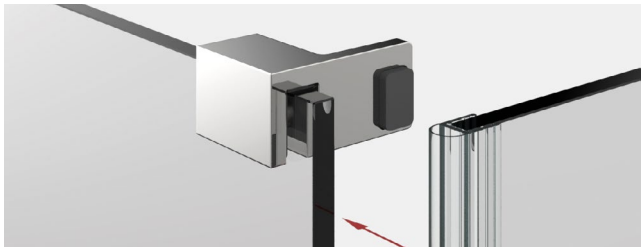

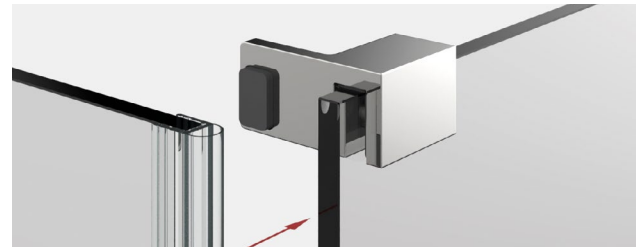

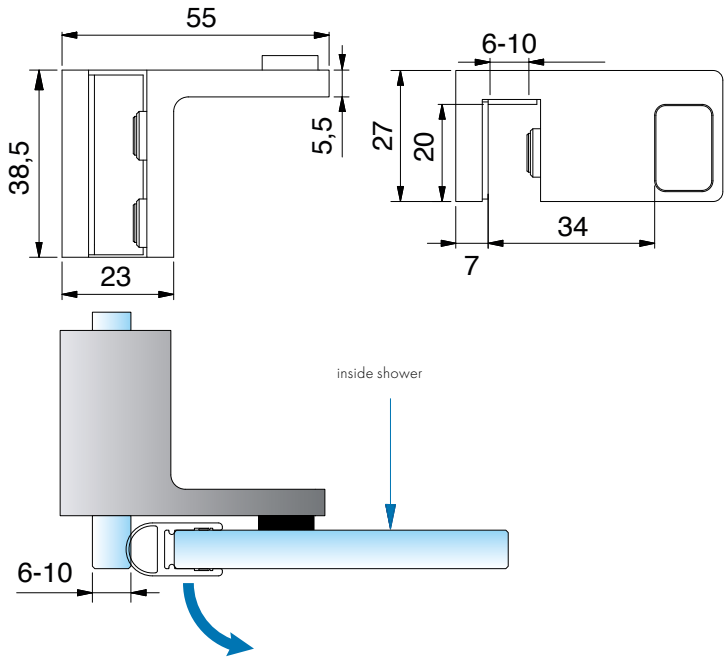

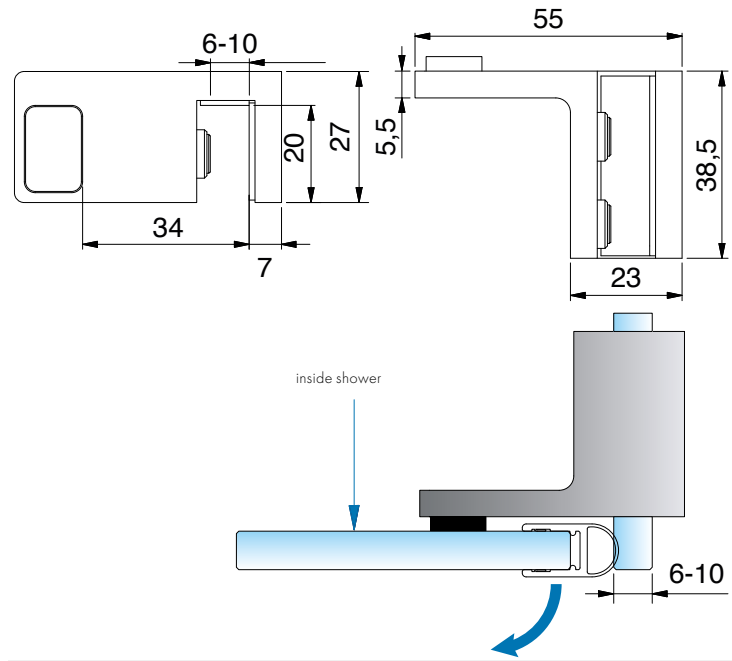

mounted on glass edge
no glass processing

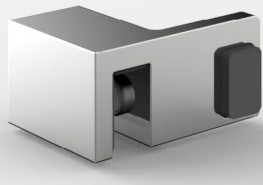

mounted on glass edge
no glass processing

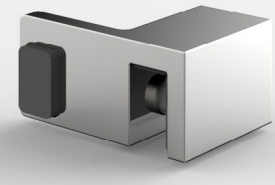

door stop limiter version left

article no.	glass thickness
8489__-L	6-10 mm

finish

	MS7	gloss chrome
	MS10*	matt chrome
	MSPVD35*	black matt
	MS135	deep black matt

door stop limiter version right

article no.	glass thickness
8489__-R	6-10 mm

finish

	MS7	gloss chrome
	MS10*	matt chrome
	MSPVD35*	black matt
	MS135	deep black matt

*article discontinued

door stop limiter

MADE IN GERMANY

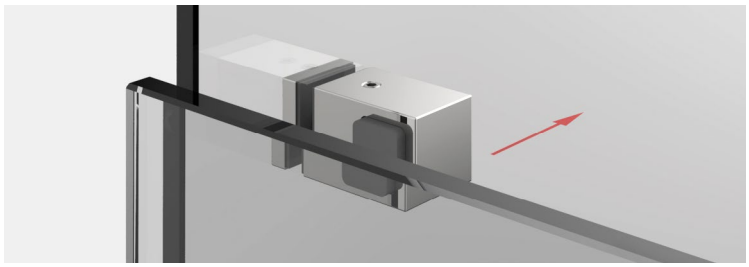

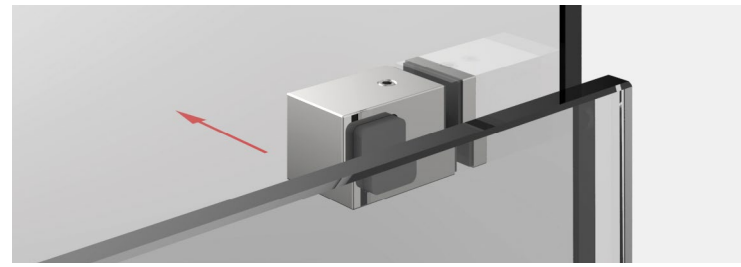

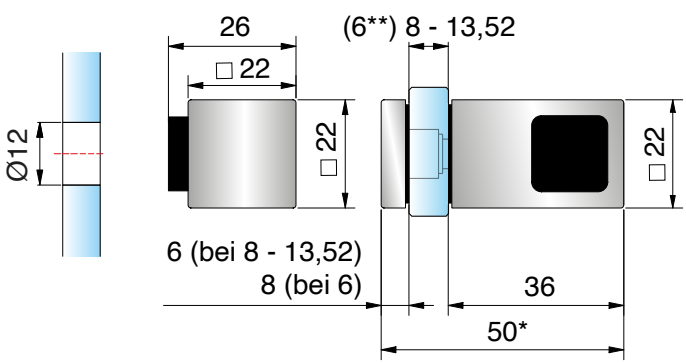

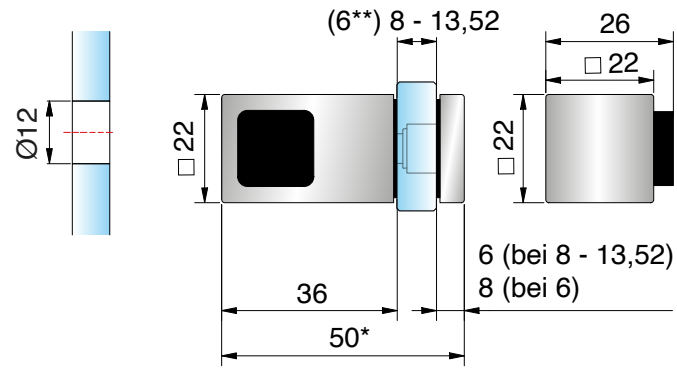





door stop limiter, glass-glass, left

article no.	glass thickness
8274__-GL	(6**)8-13,52 mm

finish

	ZN5	gloss chrome
	ZN1	matt chrome
	ZNPVD22	stainless steel optic
	ZNPVD20	gold-optic
	ZN135	deep black matt

* with 8 mm glass
**article no. 8686-7HZ replaces the HZ insert article no. 8686-5HZ when using FTG-6.
8686-7HZ must be ordered separately for FTG-6.

door stop limiter, glass-glass, right

article no.	glass thickness
8274__-GR	(6**)8-13,52 mm

finish

	ZN5	gloss chrome
	ZN1	matt chrome
	ZNPVD22	stainless steel optic
	ZNPVD20	gold-optic
	ZN135	deep black matt

* with 8 mm glass
**article no. 8686-7HZ replaces the HZ insert article no. 8686-5HZ when using FTG-6.
8686-7HZ must be ordered separately for FTG-6.

door stop limiter

MADE IN GERMANY

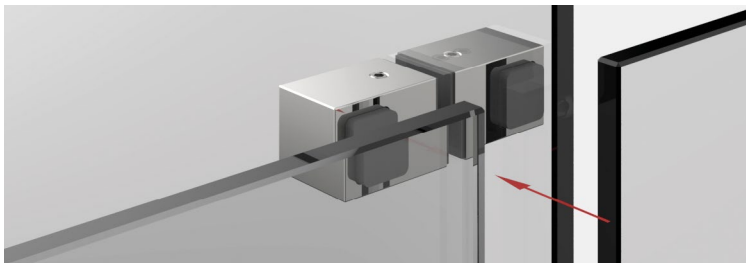

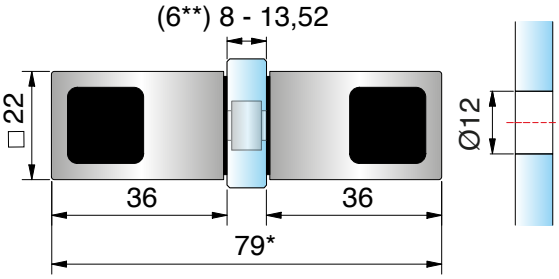



door stop limiter, glass-glass, double-sided

article no.	glass thickness
8274__-D	(6**)8-13,52 mm



finish	
ZN5	gloss chrome
ZN1	matt chrome
ZNPVD22	stainless steel optic
ZNPVD20	gold-optic
ZN135	deep black matt

* with 8 mm glass
**article no. 8686-7HZ replaces the HZ insert article no. 8686-5HZ when using FTG-6.
8686-7HZ must be ordered separately for FTG-6.

door stop limiter

MADE IN GERMANY

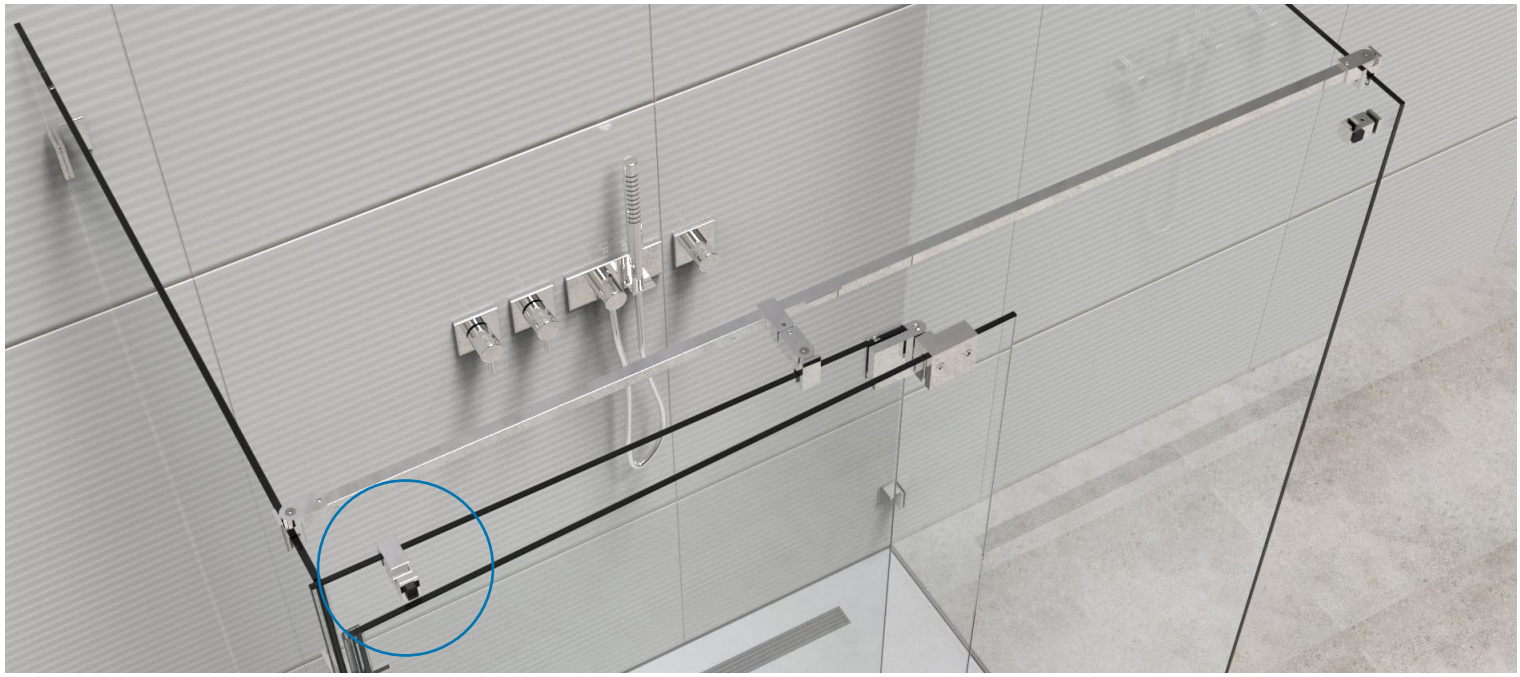

mounted on glass edge
no glass processing

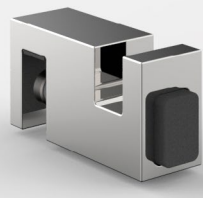

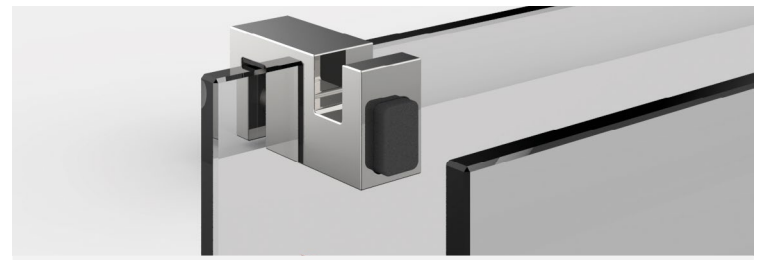

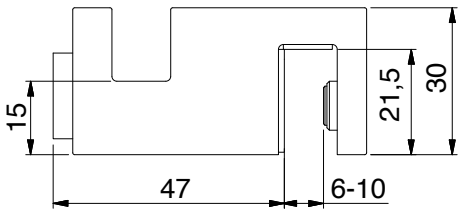

door stop limiter	
article no.	glass thickness
8499__	6-10 mm
finish	
MS7 gloss chrome	

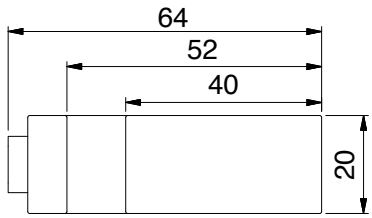

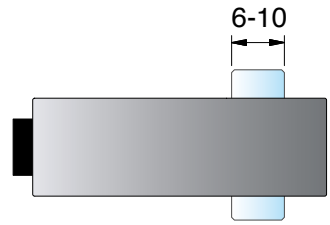

door stop limiter

MADE IN GERMANY

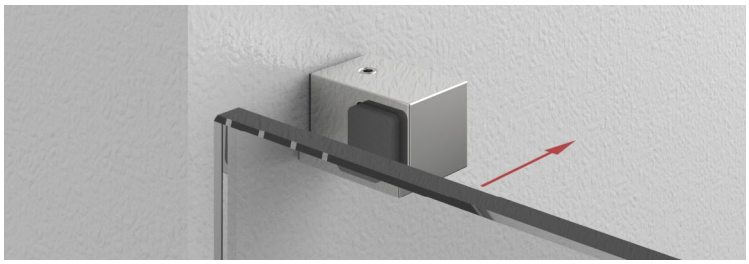

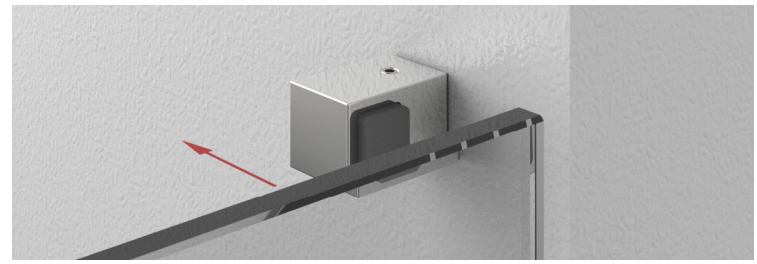

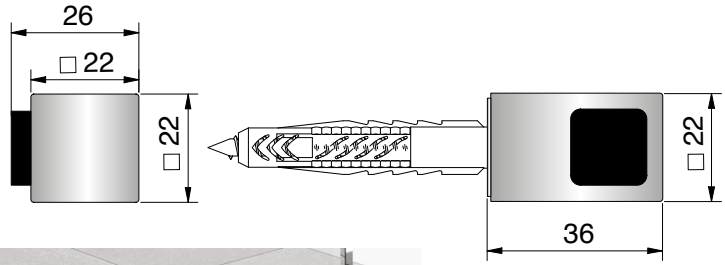

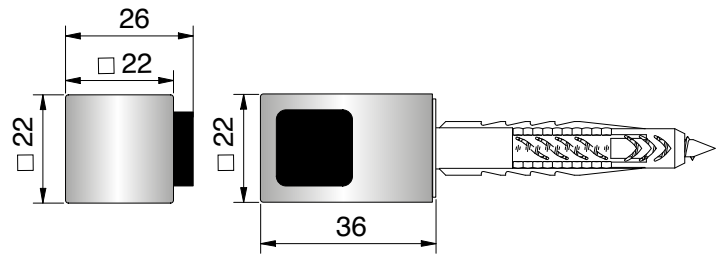

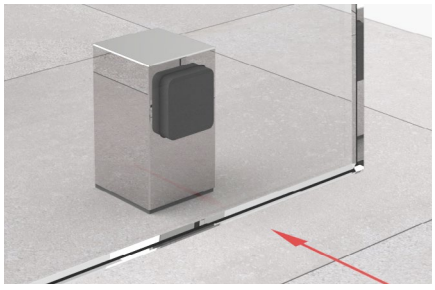

door stop limiter,
also ideally suited for floor mounting.

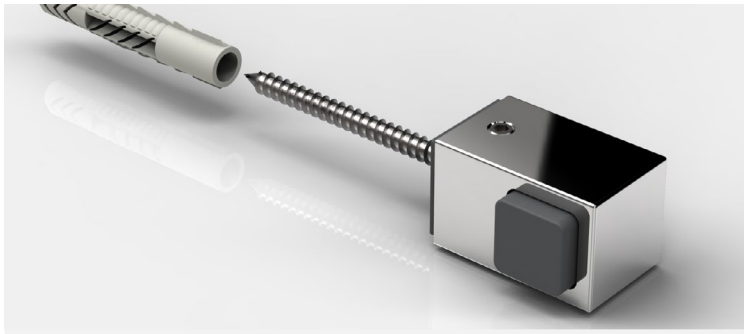

door stop limiter for wall mount, left

article no.

8274ZN5-WL

finish

	ZN5	gloss chrome
	ZN1	matt chrome
	ZNPVD22	stainless steel optic
	ZNPVD20	gold-optic
	ZN135	deep black matt

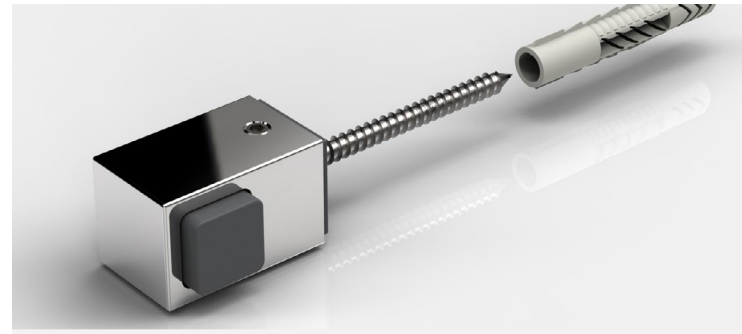

door stop limiter for wall mount, right

article no.

8274ZN5-WR

finish

	ZN5	gloss chrome
	ZN1	matt chrome
	ZNPVD22	stainless steel optic
	ZNPVD20	gold-optic
	ZN135	deep black matt

door stop limiter

MADE IN GERMANY



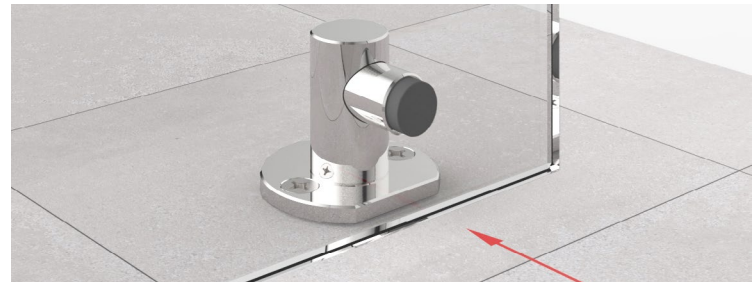

door stop limiter, also ideally suited for floor mounting.

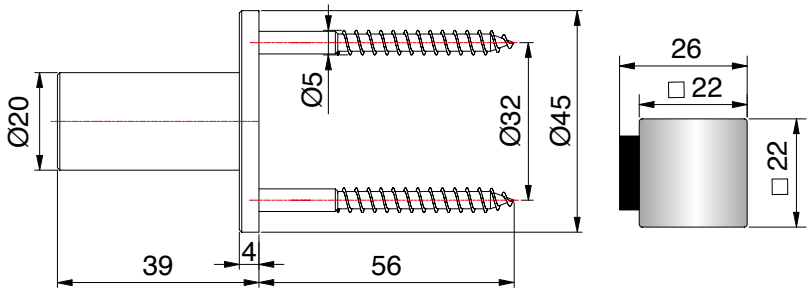

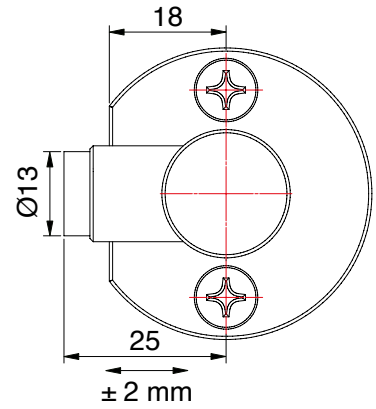



door stop glass-wall

article no.

8440__-



finish

	MS7	gloss chrome
	MS10	matt chrome
	MSPVD22	stainless steel optic

door stop limiter

MADE IN GERMANY

overview sealing profiles and splash guards

MADE IN GERMANY



Bathroom design is attracting more and more attention and the desire for individualization is growing. We are once again setting new accents with surfaces and colors. Not only do we offer you new trend colors with matching accessories within the FLAMEA+, FARDELLO, PAVONE and FARFALLA series, but our sealing profiles are also available in a new look and with different surfaces.

art-no. **material/finish**

MADE IN GERMANY

E6/EV5	=	aluminium special etched anodised gloss chrome finish
E6/EV1	=	aluminium special etched anodised natural color
E6C35	=	aluminium deep black mat
E0/14	=	aluminium white powder coated, RAL 9016
KU0	=	plastic natural color opaque
KU3	=	plastic black opaque
KU5	=	plastic chrystal clear
KU7	=	plastic gloss chrome finish
KU35	=	plastic black mat
KU134	=	plastic white mat

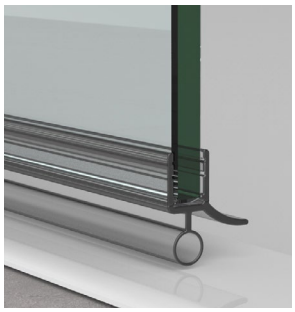

KU0



KU3



KU35



AL134/ KU134



KU5



KU7



E6/EV5



E6EV1



E6C35



E0/14

TRAINING VIDEO

Sealing **profile cutting**
(german language)

overview of available sealing profiles

MADE IN GERMANY

	function	glass inset	finish available		length	glass thickness	from page
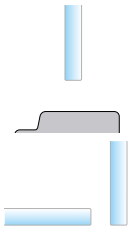	for shower door/tray	standard	KU0	plastic natural color opaque	2010/2500 mm	6/8/10/12 mm	634
			KU35	plastic black mat			
	for shower door/tray	short	KU0	plastic natural color opaque	2010 mm	8 mm	636
			KU3	plastic black opaque			
	for glass-glass 90°	standard	KU0	plastic natural color opaque	2010/2500/3000 mm	6/8/10/12 mm	638
			KU35	plastic black mat			
			KU7	plastic gloss chrome finish			
	for glass-glass 90°	short	KU0	plastic natural color opaque	2500 mm	8 mm	639
			KU3	plastic black opaque			
	for glass-glass 135° (auch flexible Dichtprofile vorhanden)	standard	KU0	plastic natural color opaque	2010/2500/3000 mm	6/8/10/12 mm	640
			KU35	plastic black mat			
			KU7	plastic gloss chrome finish			
	for glass-glass 135°	short	KU0	plastic natural color opaque	2500 mm	8 mm	640
			KU3	plastic black opaque			
	for glass-glass 180°	standard	KU0	plastic natural color opaque	2010/2500/3000 mm	6/8/10/12 mm	642
			KU35	plastic black mat			
			KU7	plastic gloss chrome finish			
	for glass-glass 180°	short	KU0	plastic natural color opaque	2500 mm	8 mm	644
			KU3	plastic black opaque			
	for glass-glass 180° (überlappend)	standard	KU0	plastic natural color opaque	2010/2500 mm	6/8/10/12 mm	641
		short	–				
	for door/wall 90°	standard	KU0	plastic natural color opaque	2010/2500/3000 mm	6/8/10/12 mm	645
			KU35	plastic black mat			
			KU7	plastic gloss chrome finish			
	for door/wall 90°	short	KU0	plastic natural color opaque	2500 mm	8 mm	645
			KU3	plastic black opaque			

Comparison of sealing profiles with standard and short glass inset

MADE IN GERMANY

The short glass inset in certain profiles offers even more new possibilities for designing exciting shower solutions.

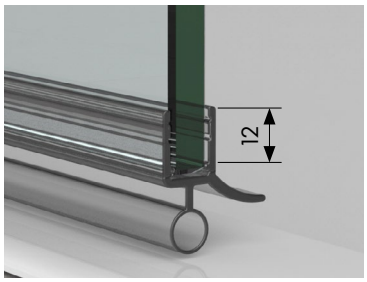

art-no.
8863KU0-8-2010
natural color
opaque

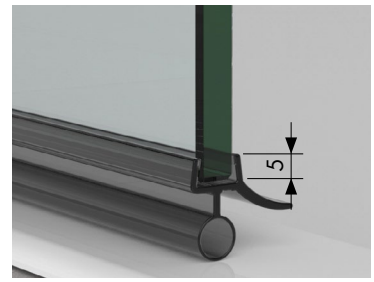

art-no.
8863KU0-8K-2010
natural color
opaque
8863KU3-8K-2010
black

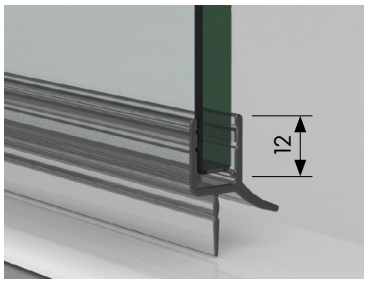

art-no.
8864KU0-8-2010
transparent

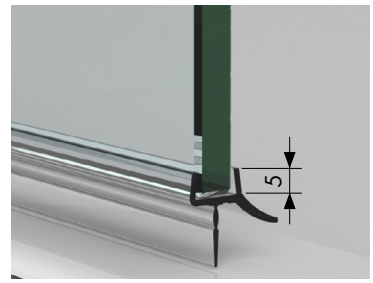

art-no.
8864KU0-8K-2010
natural color opaque
8864KU3-8K-2010
black



with splash guard
8590E6EV5-2010

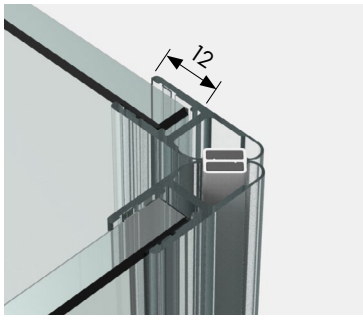

art-no.
8851KU0-8-2010
natural color
opaque

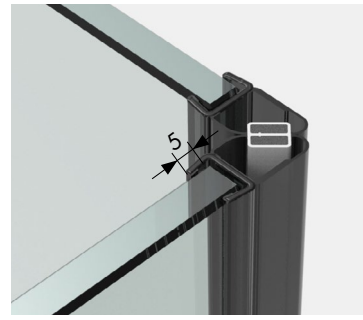

art-no.
8851KU0-8K-2500
natural color opaque
8851KU3-8K-2500
black

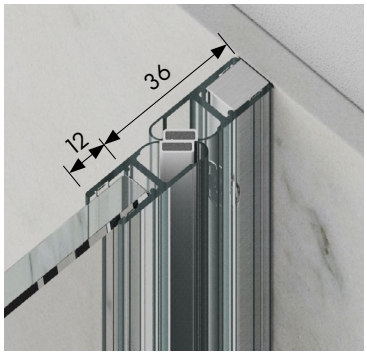

art-no.
8852KU0-8-2010
natural color opaque
with carrier profile
8883E6/EV1-8-2500

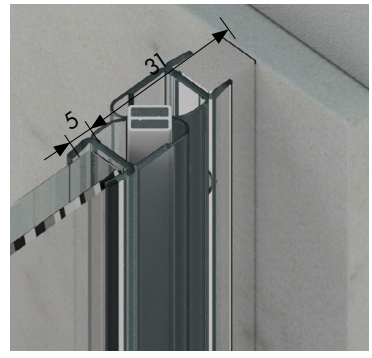

art-no.
8852KU0-8K-2500
natural color opaque
8852KU3-8K-2500
black
with carrier profile
8883E6/EV1-8-2500

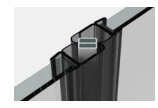

8852KU3-8K-2500
version: glass-glass

art-no.-material/finish

KU0	plastic natural color opaque	KU3	plastic black opaque	KU35	plastic black mat	KU134	plastic white mat	KU5	plastic chrystal clear
KU7	plastic gloss chrome finish	E6EV5	aluminium special etched anodised gloss chrome finish	E6EV1	aluminium special etched anodised natural color	E6C35	aluminium deep black mat	E0/14	aluminium white powder coated, RAL 9016

sealing profiles for **shower door/tray**
with **standard glass inset**



Please note: the mentioned reduction measurements are only valid for 8 or 10 mm glass! Reduction measurement for 6 or 12 mm glas are available upon request.

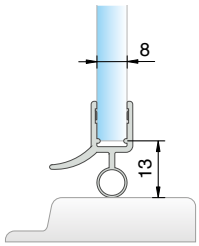

art-no.	length
8863KU0-8-2010	2010 mm
8863KU35-8-2500	2500 mm

for 6 and 8 mm glass

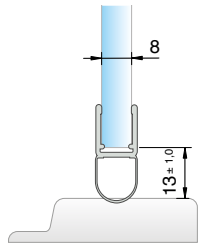

art-no.	length
8842KU0-8-2500	2500 mm

for 6 and 8 mm glass

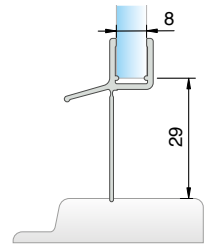

art-no.	length
8866KU0-8-2010	2010 mm

for 6 and 8 mm glass

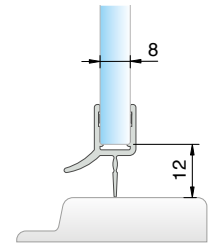

art-no.	length
8864KU0-8-2010	2010 mm
8864KU35-8-2500	2500 mm

for 6 and 8 mm glass

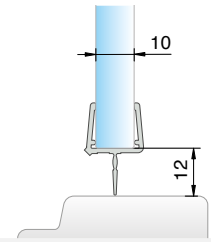

art-no.	length
8876KU0-12-2500	2500 mm

for 10 and 12 mm glass

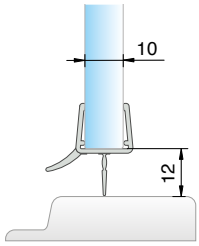

art-no.	length
8864KU0-12-2500	2500 mm

for 10 and 12 mm glass

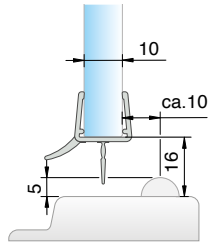

art-no.	length
8864KU0-12-2500	2500 mm
8538KU5*	2000 mm

for 10 and 12 mm glass, in combination with splash guard

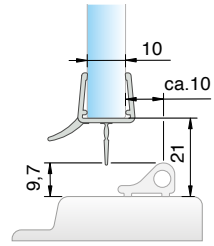

art-no.	length
8864KU0-12-2500	2500 mm
8535E__-1860*	1860 mm

for 10 and 12 mm glass, in combination with splash guard

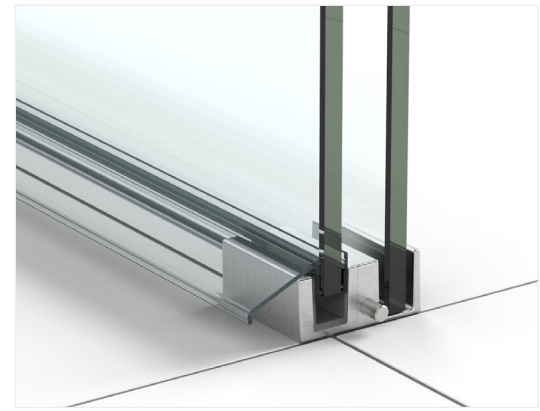

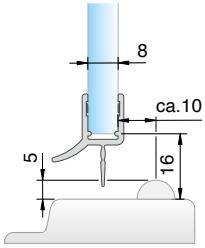

art-no.	length
8864KU0-8-2010	2010 mm
8538KU5*	2000 mm

for 6 or 8 mm glass, in combination with acrylic semi-circular rod, radius = 5 mm

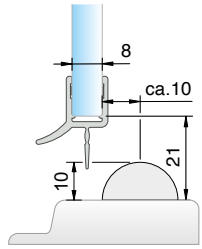

art-no.	length
8864KU0-8-2010	2010 mm
8539KU5*	2000 mm

for 6 or 8 mm glass, in combination with acrylic semi-circular rod, radius = 10 mm

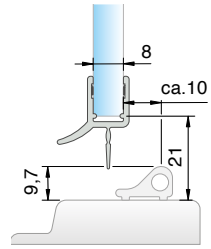

art-no.	length
8864KU0-8-2010	2010 mm
8535E__-1860*	1860 mm

for 6 and 8 mm glass, in combination with splash guard

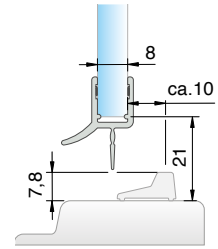

art-no.	length
8864KU0-8-2010	2010 mm
8585E__-2010*	1860 mm

for 6 and 8 mm glass, in combination with splash guard

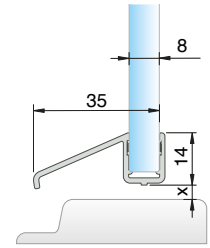

art-no.	length
8891KU0-8-2010	2010 mm
x = variabel	

for sliding door systems for 6 and 8 mm glass

art-no.-material/finish

KU0	plastic natural color opaque	KU3	plastic black opaque	KU35	plastic black mat	KU134	plastic white mat	KU5	plastic chrystal clear
KU7	plastic gloss chrome finish	E6EV5	aluminium special etched anodised gloss chrome finish	E6EV1	aluminium special etched anodised natural color	E6C35	aluminium deep black mat	E0/14	aluminium white powder coated, RAL 9016

sealing profiles for **the lower shower edge** with **standard glass inset**

Please note: the mentioned reduction measurements are only valid for 8 or 10 mm glass! Reduction measurement for 6 or 12 mm glas are available upon request.

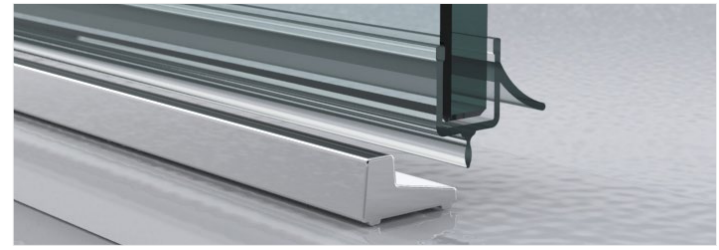

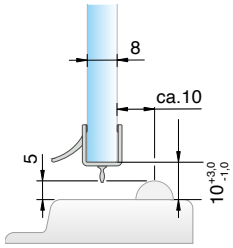

art-no.	length
8879KU0-8-2010	2010 mm
8538KU5*	2000 mm

for 8 mm glass, in combination with acrylic semi-circular rod, radius = 5 mm

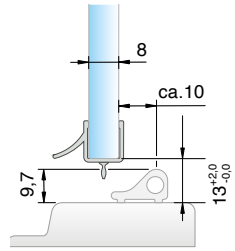

art-no.	length
8879KU0-8-2010	2010 mm
8535E6EV5*	1860 mm

for 8 mm glass, in combination with splash guard

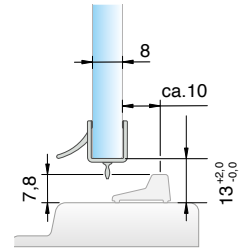

art-no.	length
8879KU0-8-2010	2010 mm
8585E__-2010*	2000 mm

for 8 mm glass, in combination with splash guard

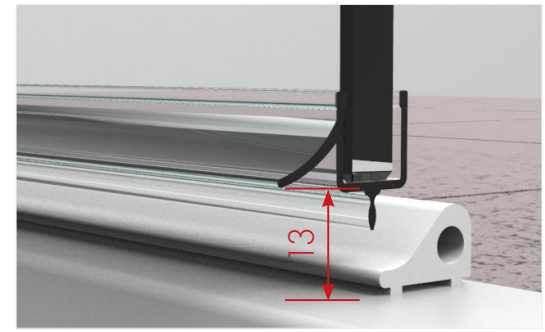

sealing profiles for **the lower shower edge, bent**

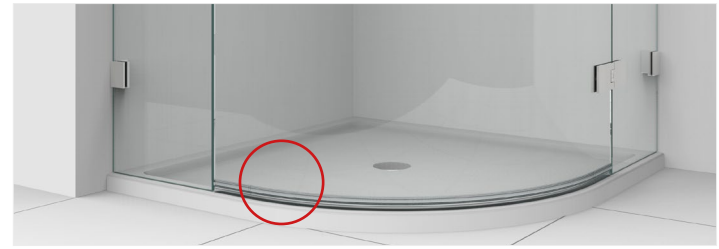

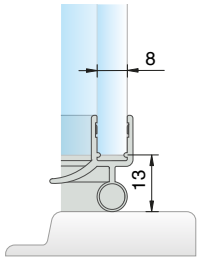

art-no.	length
8867KU0-8-R500	1220 mm

for tube radius R500-550, for 6 and 8 mm glass, winding off = 1220 mm

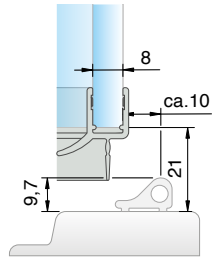

art-no.	length
8868KU0-8-R500	1215 mm
8881E__-R500	1165 mm

for tube radius R500-550, for 6 and 8 mm glass, winding off = 1215 mm, in combination with splash guard

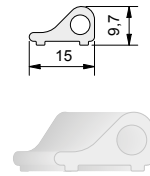

art-no.	length
8881E6/EV5-R500	1165 mm
8882E6/EV5-R550	1244 mm
8881E0/14-R500	1165 mm
8882E0/14-R550	1244 mm

splash guard for the lower shower edge, bent

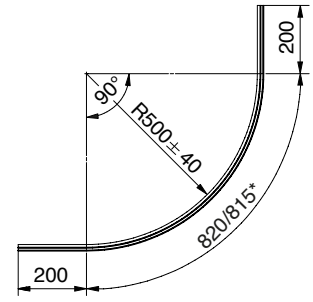

for 8867 / 8868
winding off = 1220/1215 mm
*outside

art-no.-material/finish

KU0	plastic natural color opaque	KU3	plastic black opaque	KU35	plastic black mat	KU134	plastic white mat	KU5	plastic chrystal clear
KU7	plastic gloss chrome finish	E6EV5	aluminium special etched anodised gloss chrome finish	E6EV1	aluminium special etched anodised natural color	E6C35	aluminium deep black mat	E0/14	aluminium white powder coated, RAL 9016

sealing profiles for **for shower door/tray** with **a reduced glass insertion**

Please note: the mentioned reduction measurements are only valid for 8 mm glass!

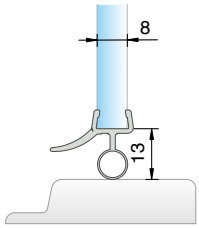

art-no.	length
8863KU0-8K-2010	2010 mm
8863KU3-8K-2010	2010 mm

for 8 mm glass

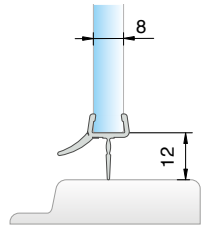

art-no.	length
8864KU0-8K-2010	2010 mm
8864KU3-8K-2010	2010 mm

for 8 mm glass

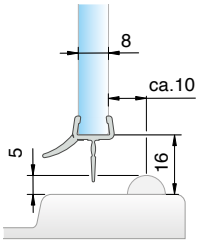

art-no.	length
8864KU0-8K-2010	2010 mm
8864KU3-8K-2010	2010 mm
8538KU5*	2000 mm

for 8 mm glass, in combination with acrylic semi-circular rod, radius = 5 mm

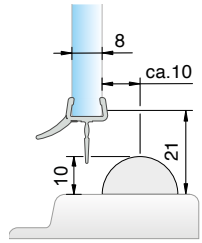

art-no.	length
8864KU0-8K-2010	2010 mm
8864KU3-8K-2010	2010 mm
8539KU5*	2000 mm

for 8 mm glass, in combination with acrylic semi-circular rod, radius = 10 mm

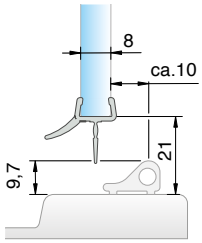

art-no.	length
8864KU0-8K-2010	2010 mm
8864KU3-8K-2010	2010 mm
8535E__-1860*	1860 mm

for 8 mm glass, in combination with splash guard

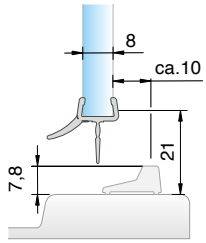

art-no.	length
8864KU0-8K-2010	2010 mm
8864KU3-8K-2010	2010 mm
8585E__-2010*	2010 mm

for 8 mm glass, in combination with splash guard

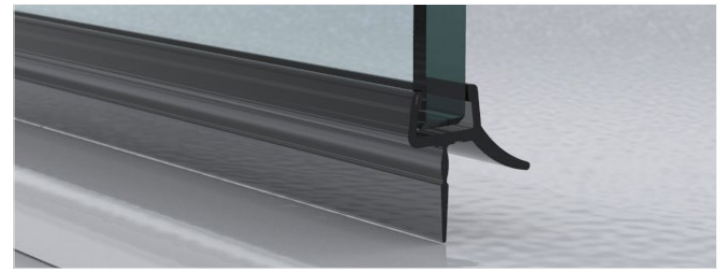

8863KU3-8K-2010

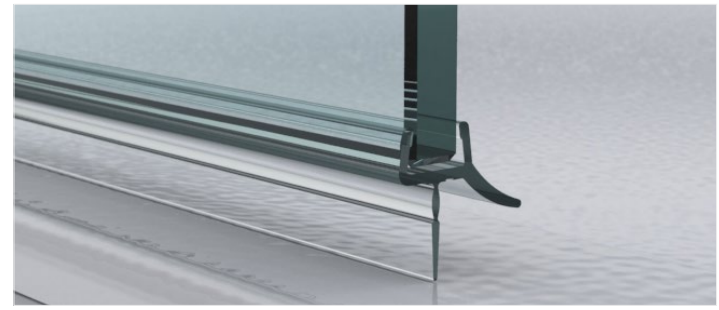

8864KU0-8K-2010

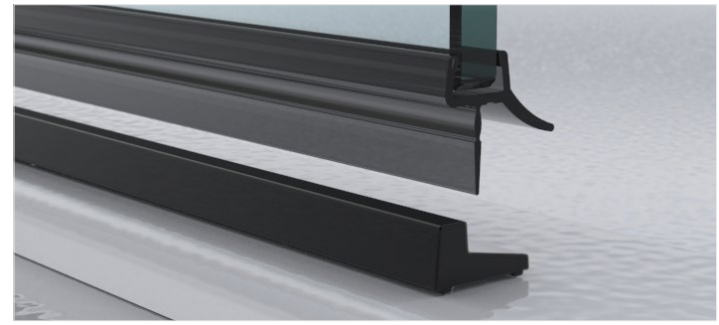

8864KU3-8K-2010
with splash guard 8585E6C35-2010

art-no.-material/finish

KU0	plastic natural color opaque	KU3	plastic black opaque	KU35	plastic black mat	KU134	plastic white mat	KU5	plastic chrystal clear
KU7	plastic gloss chrome finish	E6EV5	aluminium special etched anodised gloss chrome finish	E6EV1	aluminium special etched anodised natural color	E6C35	aluminium deep black mat	E0/14	aluminium white powder coated, RAL 9016

art-no. **material/finish**

MADE IN GERMANY

E6/EV5 = aluminium special etched anodised gloss chrome finish
E6/EV1 = aluminium special etched anodised natural color
E6C35 = aluminium deep black mat
E0/14 = aluminium white powder coated, RAL 9016
KU0 = plastic natural color opaque
KU3 = plastic black opaque
KU5 = plastic chrystal clear
KU7 = plastic gloss chrome finish
KU35 = plastic black mat
KU134 = plastic white mat

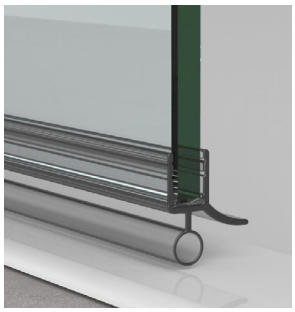
KU0


KU3


KU35


AL134/ KU134


KU5


KU7


E6EV5


E6EV1


E6C35


E0/14

TRAINING VIDEO

Sealing **profile cutting**
(german language)

sealing profiles for **Glas-Glas 90°**
with **standard glass inset**



Please note: the mentioned reduction measurements are only valid for 8 or 10 mm glass! Reduction measurement for 6 or 12 mm glas are available upon request.

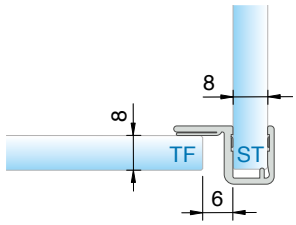

art-no.	length
8855KU0-8-2010	2010 mm
8855KU0-8-2500	2500 mm

for 6 and 8 mm glass, for an **outward** opening shower hinge

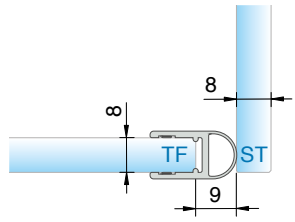

art-no.	length
8861KU0-8-2010	2010 mm
8861KU0-8-2500	2500 mm
8861KU7-8-2010	2010 mm
8861KU35-8-2500	2500 mm

for 6 and 8 mm glass, for **an one sided opening or pendelum** shower hinge

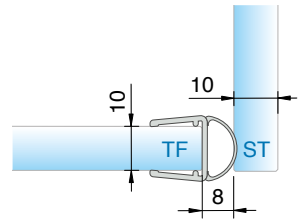

art-no.	length
8861KU0-12-2500	2500 mm
8861KU0-12-3000	3000 mm

for 10 and 2 mm glass, for an **pendelum** shower hinge

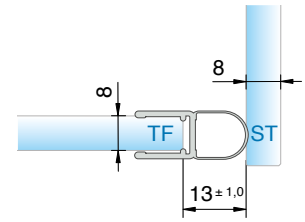

art-no.	length
8842KU0-8-2500	2500 mm

for 6 and 8 mm glass, for an **pendelum** shower hinge

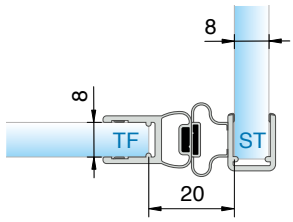

art-no.	length
8849KU0-8-2500	2500 mm

for 6 and 8 mm glass, for **an one sided opening or pendelum** shower hinge

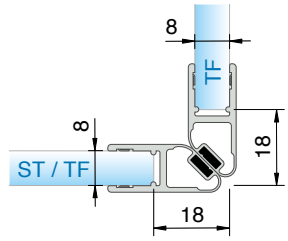

art-no.	length
8851KU0-8-2010	2010 mm
8851KU0-8-2500	2500 mm
8851KU7-8-2010	2010 mm
8851KU35-8-2500	2500 mm

for 6 and 8 mm glass, for an **outward** opening shower hinge

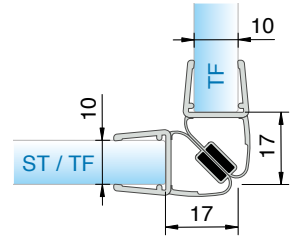

art-no.	length
8851KU0-12-2500	2500 mm

for 10 and 12 mm glass,, for an **outward** opening shower hinge

for 10 and 12 mm glass,, for an **outward** opening shower hinge

ST = side panel | TF = door panel

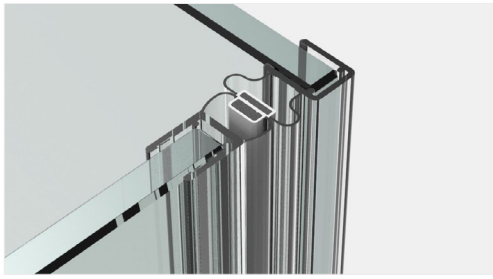

8861KU0-8-2010

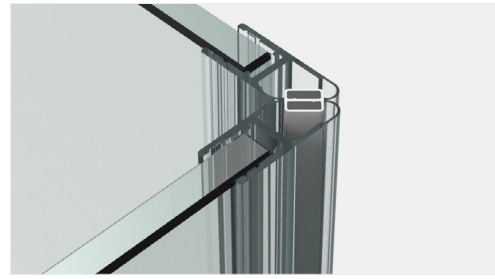

8851KU0-8-2500

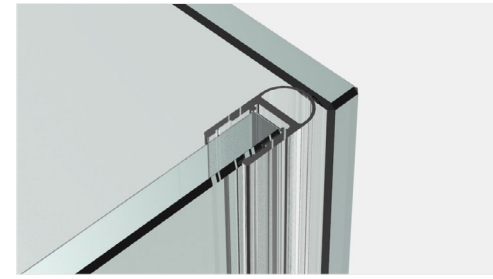

8849KU0-8-2500

art-no.-material/finish

KU0	plastic natural color opaque	KU3	plastic black opaque	KU35	plastic black mat	KU134	plastic white mat	KU5	plastic chrystal clear
KU7	plastic gloss chrome finish	E6EV5	aluminium special etched anodised gloss chrome finish	E6EV1	aluminium special etched anodised natural color	E6C35	aluminium deep black mat	E0/14	aluminium white powder coated, RAL 9016

sealing profiles for **Glas-Glas 90°**

with **a reduced glass insertion**

Please note: the mentioned reduction measurements are only valid for 8 or 10 mm glass!

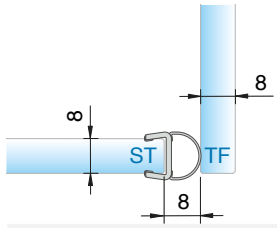

art-no.	length
8861KU0-8K-2500	2500 mm
8861KU3-8K-2500	2500 mm

8 mm Glas, for a **pendulum** shower hinge

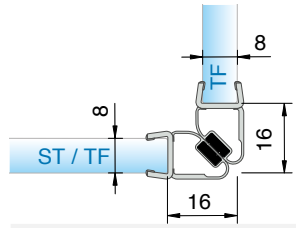

art-no.	length
8851KU0-8K-2500	2500 mm
8851KU3-8K-2500	2500 mm

8 mm Glas, for an **outward** opening shower hinge

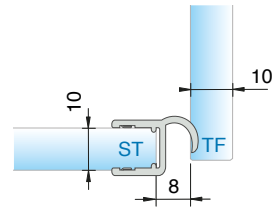



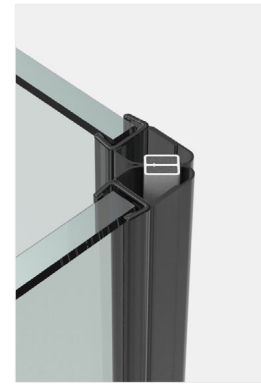

8851KU0-8K-2500

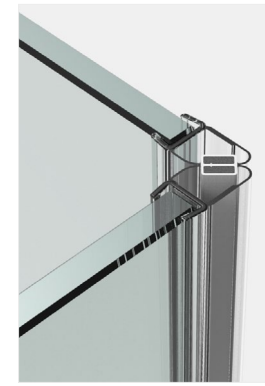

8851KU3-8K-2500

edge protection for **Glas-Glas 90°**

with **a reduced glass insertion**

The mentioned reduction measurements are only valid for 6/ 8 or 10 mm glass!

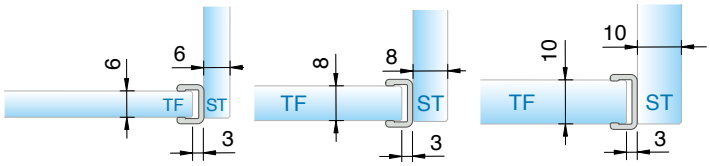

art-no.			length
8848KU0–6–2010	8848KU0–8–2500	8848KU0–10–2500	2010 mm 2500 mm

for each 6/ 8 or 10 mm glass, for a **pendulum** shower hinge

ST = side panel | TF = door panel

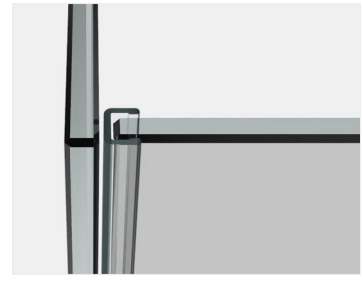

8848KU0–6–2010



8848KU0–8–2500

art-no.-material/finish

KU0	plastic natural color opaque	KU3	plastic black opaque	KU35	plastic black mat	KU134	plastic white mat	KU5	plastic chrystal clear
KU7	plastic gloss chrome finish	E6EV5	aluminium special etched anodised gloss chrome finish	E6EV1	aluminium special etched anodised natural color	E6C35	aluminium deep black mat	E0/14	aluminium white powder coated, RAL 9016

sealing profiles for **Glas-Glas 135°**

with **standard glass inset**

Please note: the mentioned reduction measurements are only valid for 8 or 10 mm glass! Reduction measurement for 6 or 12 mm glas are available upon request.



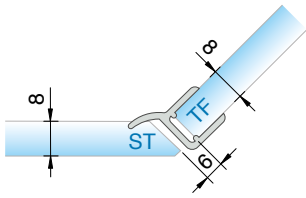

art-no.	length
8860KU0-8-2010	2010 mm
8860KU0-8-2500	2500 mm

for 6 and 8 mm glass, for an **outward** opening shower hinge

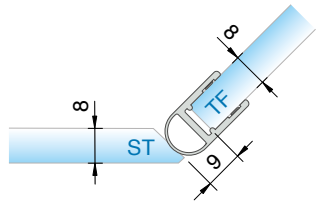

art-no.	length
8861KU0-8-2010	2010 mm
8861KU0-8-2500	2500 mm
8861KU7-8-2010	2010 mm
8861KU35-8-2500	2500 mm

for 6 and 8 mm glass, for a **pendulum** shower hinge

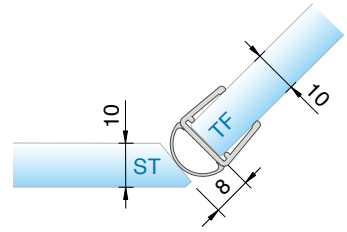

art-no.	length
8861KU0-12-2500	2500 mm
8861KU0-12-3000	3000 mm

for 10 and 12 mm glass,, for a **pendulum** shower hinge

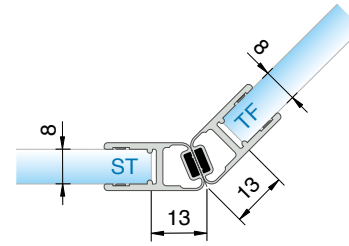

art-no.	length
8853KU0-8-2010	2010 mm
8853KU0-8-2500	2500 mm

for 6 and 8 mm glass, for an **outward** opening shower hinge

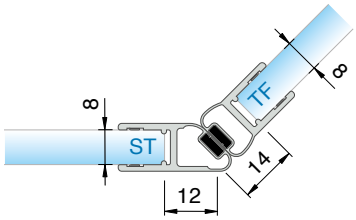

art-no.	length
8875KU7-8-2010	2010 mm
8875KU35-8-2500	2500 mm

for 6 and 8 mm glass, for **an one sided opening or pendelum** shower hinge

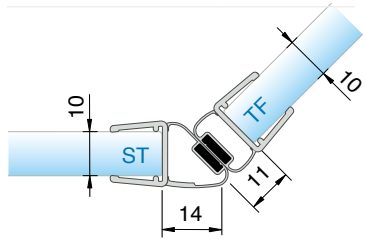

art-no.	length
8875KU0-12-2500	2500 mm

for 10 and 12 mm glass,, for **an one sided opening or pendelum** shower hinge

sealing profiles for **Glas-Glas 135°**

with **a reduced glass insertion**

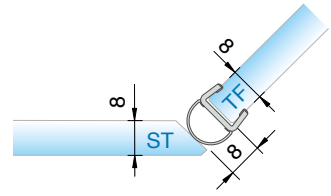

art-no.	length
8861KU0-8K-2500	2500 mm
8861KU3-8K-2500	2500 mm

for 6 and 8 mm glass, for a **pendulum** shower hinge

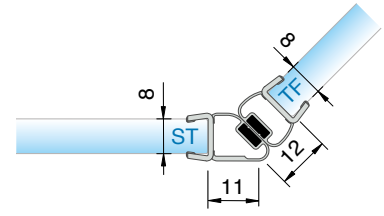

art-no.	length
8875KU0-8K-2500	2500 mm
8875KU3-8K-2500	2500 mm

for 6 and 8 mm glass, for **an one sided opening or pendelum** shower hinge

ST = side panel | TF = door panel

art-no.-material/finish

KU0	plastic natural color opaque	KU3	plastic black opaque	KU35	plastic black mat	KU134	plastic white mat	KU5	plastic chrystal clear
KU7	plastic gloss chrome finish	E6EV5	aluminium special etched anodised gloss chrome finish	E6EV1	aluminium special etched anodised natural color	E6C35	aluminium deep black mat	E0/14	aluminium white powder coated, RAL 9016

sealing profiles for **Glas-Glas**

(**Adjustable angle**: 90° – 180°)

Please note: the mentioned reduction measurements are only valid for 8 or 10 mm glass! Reduction measurement for 6 mm glas are available upon request.

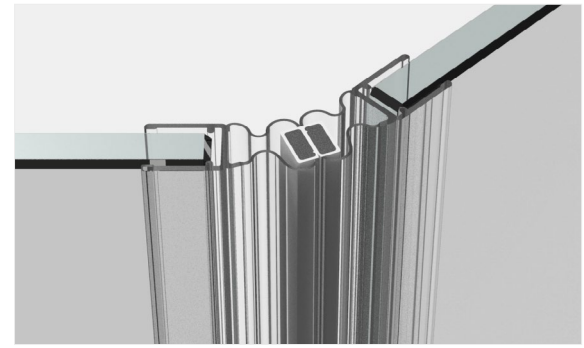

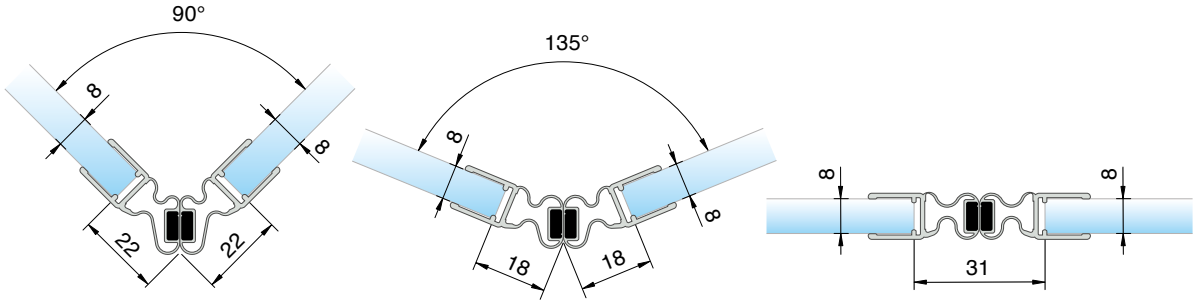

application 90° application 135° application 180°

art-no.	length
8874KU0-8-2010	2010 mm
8874KU0-8-2500	2500 mm

für 6 und 8 mm Glas for an **outward** opening shower hinge

reduction measurement for 8 mm glass

Mounting bracket	reduction measurement
90°	22 mm
105°	21 mm
120°	19 mm
135°	18 mm
150°	16 mm
165°	16 mm
180°	15,5 mm

sealing profiles for **Glas-Glas 180°**

(overlapping)

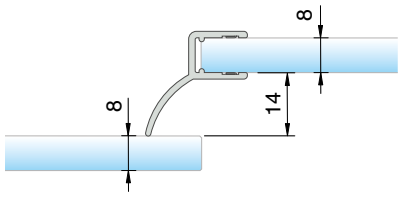

art-no.	length
8858KU0-8-2010	2010 mm
8858KU0-8-2500	2500 mm

for 6 and 8 mm glass, for an **outward** opening shower hinge

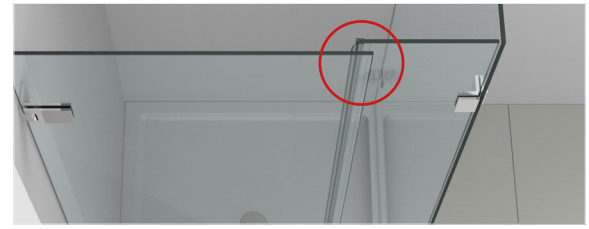

ST = side panel | TF = door panel

art-no.-material/finish

KU0	plastic natural color opaque	KU3	plastic black opaque	KU35	plastic black mat	KU134	plastic white mat	KU5	plastic chrystal clear
KU7	plastic gloss chrome finish	E6EV5	aluminium special etched anodised gloss chrome finish	E6EV1	aluminium special etched anodised natural color	E6C35	aluminium deep black mat	E0/14	aluminium white powder coated, RAL 9016

sealing profiles for **Glas-Glas 180°**

with **standard glass inset**

Please note: the mentioned reduction measurements are only valid for 8 or 10 mm glass! Reduction measurement for 6 or 12 mm glas are available upon request.

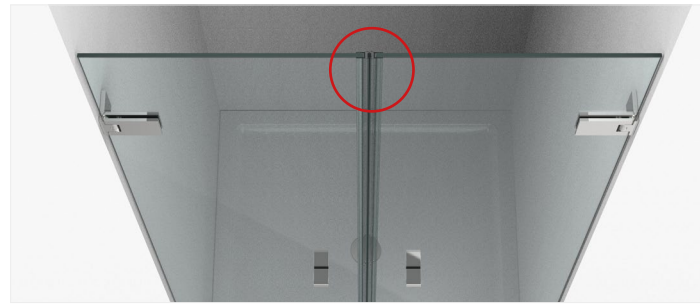

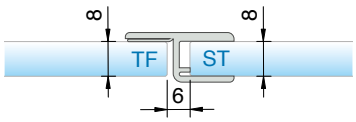

art-no.	length
8856KU0-8-2010	2010 mm
8856KU0-8-2500	2500 mm

for 6 and 8 mm glass, for an **outward** opening shower hinge

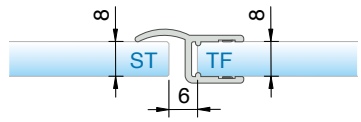

art-no.	length
8857KU0-8-2010	2010 mm
8857KU0-8-2500	2500 mm
8857KU35-8-2500	2500 mm

for 6 and 8 mm glass, for an **outward** opening shower hinge

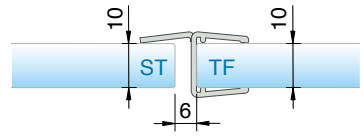

art-no.	length
8857KU0-12-2500	2500 mm

for 10 and 12 mm glass,, for an **outward** opening shower hinge

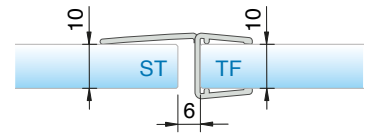

art-no.	length
8869KU0-12-2500	2500 mm

for 10 and 12 mm glass,, for an **outward** opening shower hinge

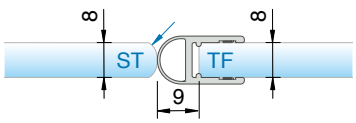

art-no.	length
8861KU0-8-2010	2010 mm
8861KU0-8-2500	2500 mm
8861KU7-8-2010	2010 mm
8861KU35-8-2500	2500 mm

for 6 and 8 mm glass, for a **pendulum** shower hinge

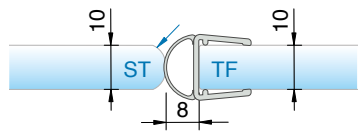

art-no.	length
8861KU0-12-2500	2500 mm
8861KU0-12-3000	3000 mm

for 10 and 12 mm glass,, for a **pendulum** shower hinge

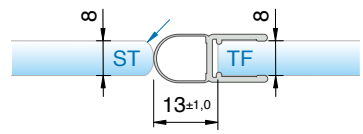

art-no.	length
8842KU0-8-2500	2500 mm

for 6 and 8 mm glass, for a **pendulum** shower hinge

ST = side panel | TF = door panel

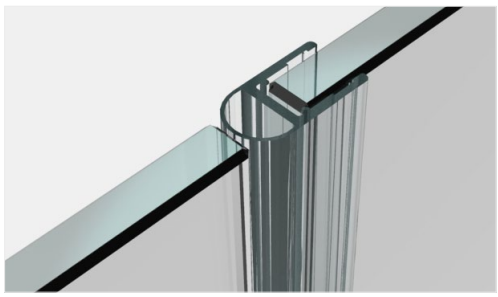

8856KU0-8-2010

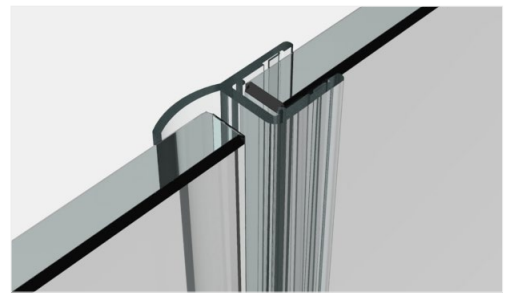

8857KU0-8-2500



8861KU0-8-2010

art-no.-material/finish

KU0	plastic natural color opaque	KU3	plastic black opaque	KU35	plastic black mat	KU134	plastic white mat	KU5	plastic chrystal clear
KU7	plastic gloss chrome finish	E6EV5	aluminium special etched anodised gloss chrome finish	E6EV1	aluminium special etched anodised natural color	E6C35	aluminium deep black mat	E0/14	aluminium white powder coated, RAL 9016

sealing profiles for **Glas-Glas 180°**

with **standard glass inset**

Please note: the mentioned reduction measurements are only valid for 8 or 10 mm glass! Reduction measurement for 6 or 12 mm glas are available upon request.

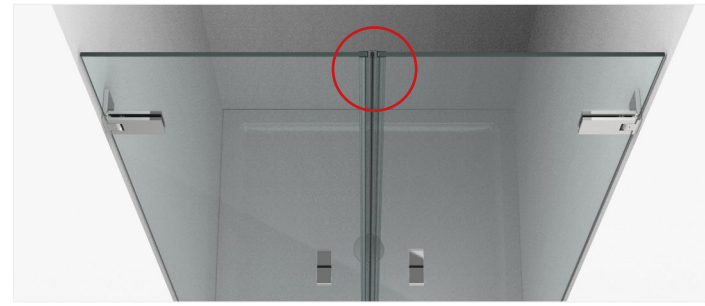

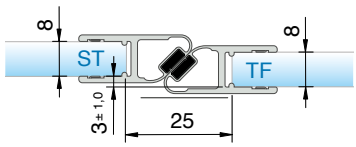

art-no.	length
8852KU0-8-2010	2010 mm
8852KU0-8-2500	2500 mm
8852KU7-8-2010	2010 mm
8852KU35-8-2500	2500 mm

for 6 and 8 mm glass, for an **outward** opening shower hinge

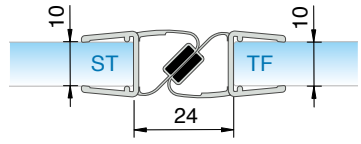

art-no.	length
8852KU0-12-2500	2500 mm

for 10 and 12 mm glass,, for an **outward** opening shower hinge

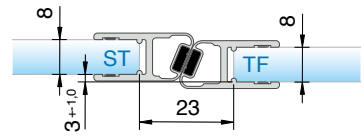

art-no.	length
8854KU0-8-2010	2010 mm
8854KU0-8-2500	2500 mm

for 6 and 8 mm glass, for an **outward** opening shower hinge

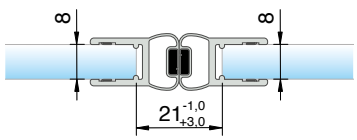

art-no.	length
8850KU0-8-2010	2010 mm
8850KU0-8-2500	2500 mm
8850KU7-8-2010	2010 mm
8850KU35-8-2500	2500 mm

for 6 and 8 mm glass, for a **pendulum** shower hinge

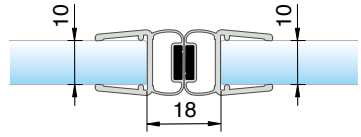

art-no.	length
8850KU0-12-2500	2500 mm

for 10 and 12 mm glass,, for a **pendulum** shower hinge

ST = side panel | TF = door panel

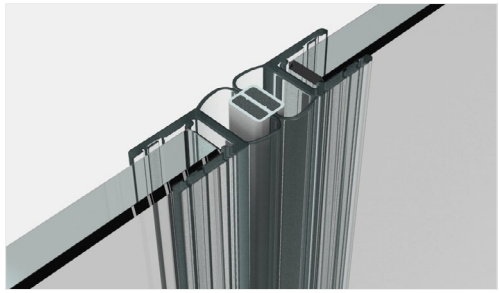

8850KU0-8-2010

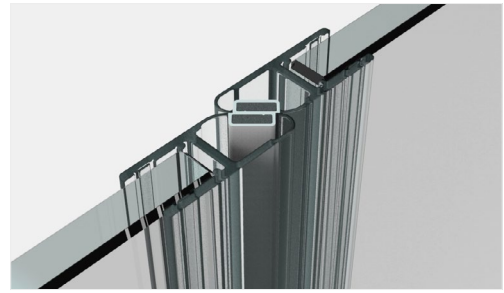

8852KU0-8-2010

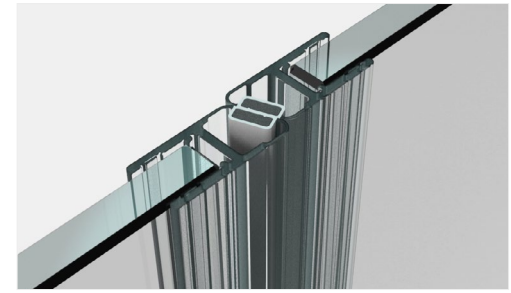

8854KU0-8-2010

art-no.-material/finish

KU0	plastic natural color opaque	KU3	plastic black opaque	KU35	plastic black mat	KU134	plastic white mat	KU5	plastic chrystal clear
KU7	plastic gloss chrome finish	E6EV5	aluminium special etched anodised gloss chrome finish	E6EV1	aluminium special etched anodised natural color	E6C35	aluminium deep black mat	E0/14	aluminium white powder coated, RAL 9016

sealing profiles for **Glas-Glas 180°**

with **a reduced glass insertion**

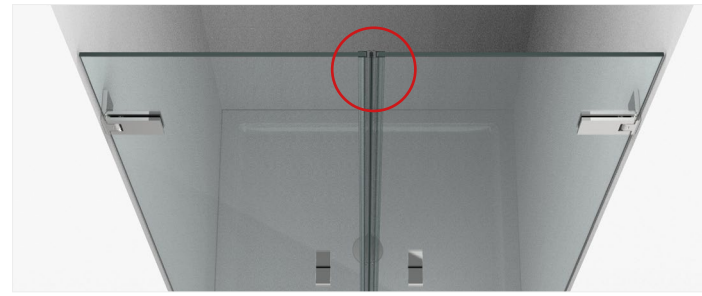

Please note: the mentioned reduction measurements are only valid for 8 or 10 mm glass! Reduction measurement for 6 mm glas are available upon request.

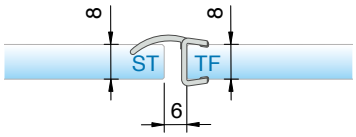

art-no.	length
8857KU0-8K-2500	2500 mm
8857KU3-8K-2500	2500 mm

for 8 mm glass, for an **outward** opening shower hinge

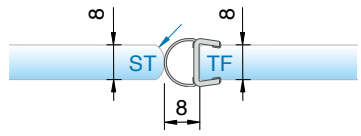

art-no.	length
8861KU0-8K-2500	2500 mm
8861KU3-8K-2500	2500 mm

for 8 mm glass, for a **pendulum** shower hinge

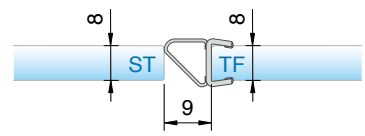

art-no.	length
8845KU0-8K-2500	2500 mm
8845KU35-8K-2500	2500 mm

for 8 mm glass, for a **pendulum** shower hinge

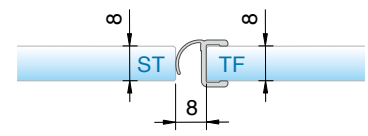

art-no.	length
8865KU0-8-2500	2500 mm
8865KU3-8-2500	2500 mm

for 8 mm glass, for a **pendulum** shower hinge

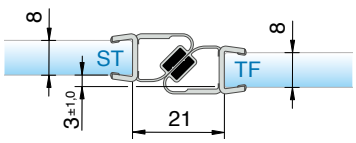

art-no.	length
8852KU0-8K-2500	2500 mm
8852KU3-8K-2500	2500 mm

for 8 mm glass, for an **outward** opening shower hinge

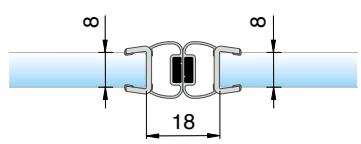

art-no.	length
8850KU0-8K-2500	2500 mm
8850KU3-8K-2500	2500 mm

for 8 mm glass, for a **pendulum** shower hinge

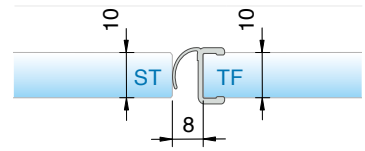

edge protection for **Glas-Glas 180°**

with **a reduced glass insertion**

Die hier dargestellten Abzugsmaße gelten für 6/8 oder 10 mm Glas.

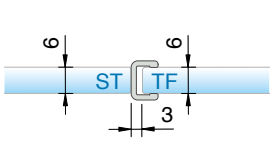

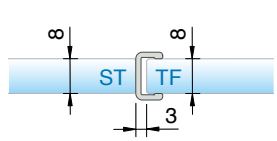

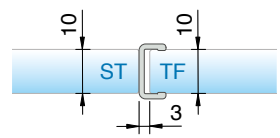

art-no.			length
8848KU0–6–2010	8848KU0–8–2500	8848KU0–10–2500	2010 mm 2500 mm

for 6/ 8 or 10 mm glass, for a **pendulum** shower hinge

ST = side panel | TF = door panel

art-no.-material/finish

KU0	plastic natural color opaque	KU3	plastic black opaque	KU35	plastic black mat	KU134	plastic white mat	KU5	plastic chrystal clear
KU7	plastic gloss chrome finish	E6EV5	aluminium special etched anodised gloss chrome finish	E6EV1	aluminium special etched anodised natural color	E6C35	aluminium deep black mat	E0/14	aluminium white powder coated, RAL 9016

sealing profiles for **door/wall 90°**

(hinge side)



Please note: the mentioned reduction measurements are only valid for 8 or 10 mm glass! Reduction measurement for 6 or 12 mm glas are available upon request.

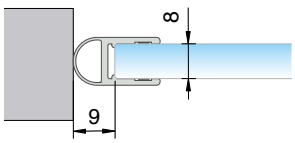

art-no.	length
8861KU0-8-2010	2010 mm
8861KU0-8-2500	2500 mm
8861KU7-8-2010	2010 mm
8861KU35-8-2500	2500 mm

for 6 and 8 mm glass, for a **pendulum** shower hinge

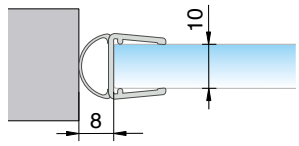

art-no.	length
8861KU0-12-2500	2500 mm
8861KU0-12-3000	3000 mm

for 10 and 12 mm glass,, for a **pendulum** shower hinge

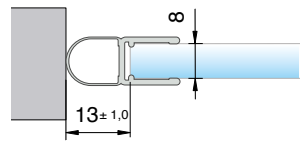

art-no.	length
8842KU0-8-2500	2500 mm

for 6 and 8 mm glass, for a **pendulum** shower hinge

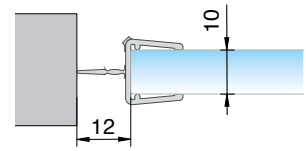

art-no.	length
8876KU0-12-2500	2500 mm

for 10 and 12 mm glass,, for a **pendulum** shower hinge

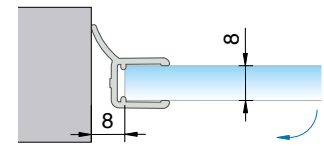

art-no.	length
8862KU0-8-2010	2010 mm
8862KU0-8-2500	2500 mm

for 6 and 8 mm glass, for an **outward** opening shower hinge

sealing profiles for **door/wall 90°**

(handle side)



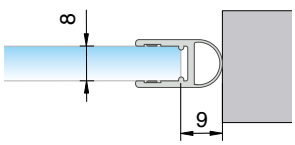

art-no.	length
8861KU0-8-2010	2010 mm
8861KU0-8-2500	2500 mm
8861KU7-8-2010	2010 mm
8861KU35-8-2500	2500 mm

for 6 and 8 mm glass, for a **pendulum** shower hinge

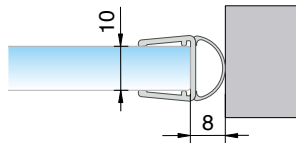

art-no.	length
8861KU0-12-2500	2500 mm
8861KU0-12-3000	3000 mm

for 10 and 12 mm glass,, for a **pendulum** shower hinge

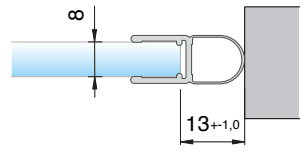

art-no.	length
8842KU0-8-2500	2500 mm

for 6 and 8 mm glass, for a **pendulum** shower hinge

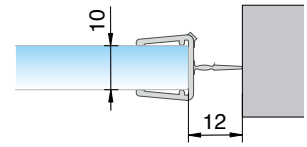

art-no.	length
8876KU0-12-2500	2500 mm

for 6 and 8 mm glass, for a **pendulum** shower hinge

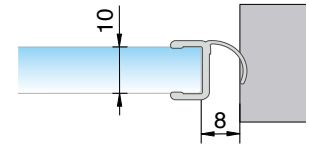

with **a reduced glass insertion**

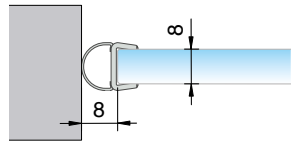

art-no.	length
8861KU0-8K-2500	2500 mm
8861KU3-8K-2500	2500 mm

Beschlagseite
for 8 mm glass, for a **pendulum** shower hinge

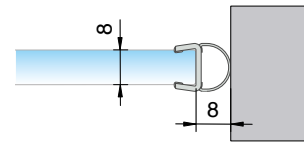

art-no.	length
8861KU0-8K-2500	2500 mm
8861KU3-8K-2500	2500 mm

Griffseite
for 8 mm glass, for a **pendulum** shower hinge

art-no.-material/finish

KU0	plastic natural color opaque	KU3	plastic black opaque	KU35	plastic black mat	KU134	plastic white mat	KU5	plastic chrystal clear
KU7	plastic gloss chrome finish	E6EV5	aluminium special etched anodised gloss chrome finish	E6EV1	aluminium special etched anodised natural color	E6C35	aluminium deep black mat	E0/14	aluminium white powder coated, RAL 9016

carrier profile **for door stop**

for 6 and 8 mm glass, for an **one sided opening or pendelum** shower hinge

Please note: the mentioned reduction measurements are only valid for 8 or 10 mm glass! Reduction measurement for 6 mm glas are available upon request.



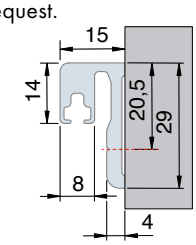

art-no.	length
8880E6/EV1-2010	2010 mm
8880E6/EV5-2010	2010 mm
8880E6/EV1-2500	2500 mm
8880E6/EV5-2500	2500 mm

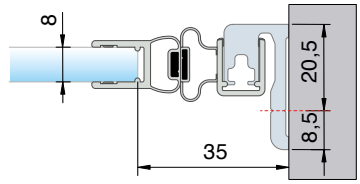

art-no.	length
8880E__-2010 in combination with 8849KU0-8-2010	2010 mm 2010 mm



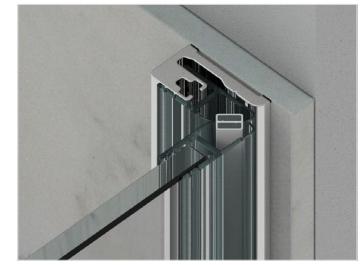

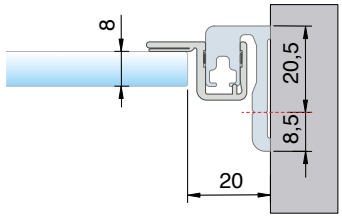

art-no.	length
8880E__-2010 in combination with 8855KU0-8-2010	2010 mm 2010 mm

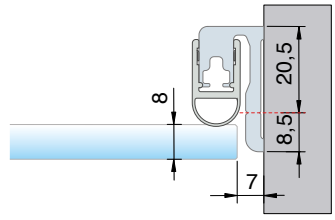

art-no.	length
8880E__-2010 in combination with 8861KU0-8-2010	2010 mm 2010 mm

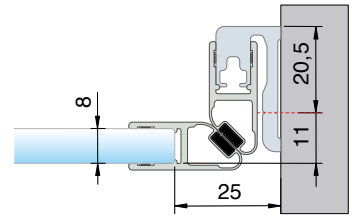

art-no.	length
8880E__-2010 in combination with 8851KU0-8-2010	2010 mm 2010 mm

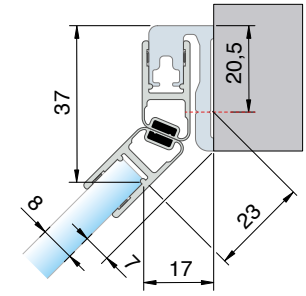

art-no.	length
8880E__-2010 in combination with 8853KU0-8-2010	2010 mm 2010 mm

carrier profile **for door stop**

and sealing profile with **a reduced glass insertion**

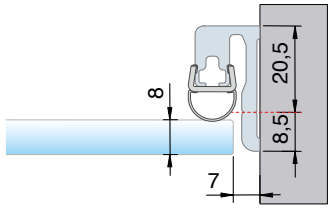

art-no.	length
8880E__-2500 in combination with 8861KU0-8K-2500	2500 mm 2500 mm

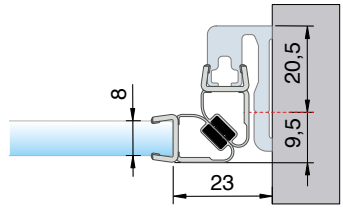

art-no.	length
8880E__-2500 in combination with 8851KU0-8K-2500	2500 mm 2500 mm

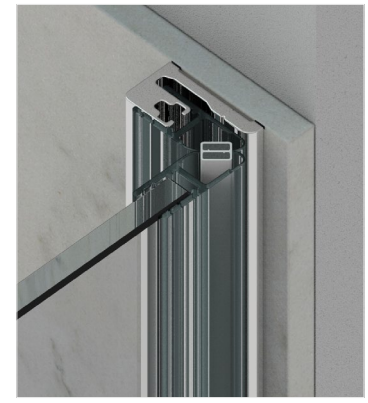

art-no.-material/finish

KU0	plastic natural color opaque	KU3	plastic black opaque	KU35	plastic black mat	KU134	plastic white mat	KU5	plastic chrystal clear
KU7	plastic gloss chrome finish	E6EV5	aluminium special etched anodised gloss chrome finish	E6EV1	aluminium special etched anodised natural color	E6C35	aluminium deep black mat	E0/14	aluminium white powder coated, RAL 9016

carrier profile **for door stop**

for 6 and 8 mm glass, for an **one sided opening or pendelum** shower hinge

Please note: the mentioned reduction measurements are only valid for 8 or 10 mm glass! Reduction measurement for 6 mm glas are available upon request.





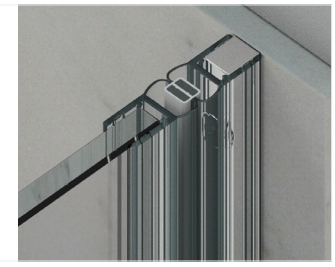

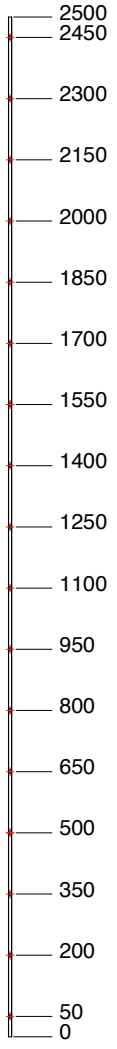

bore gaps

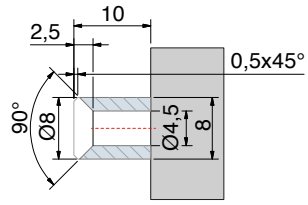

art-no.	length
8883E6/EV1-8-2500	2500 mm

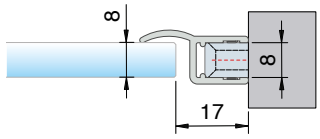

art-no.	length
8883E6/EV1-8-2500	2500 mm
in combination with	2010 mm
8857KU0-8-2010	

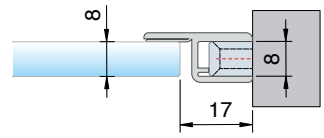

art-no.	length
8883E6/EV1-8-2500	2500 mm
in combination with	2010 mm
8856KU0-8-2010	

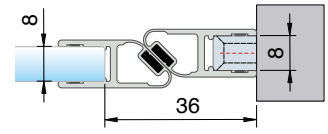

art-no.	length
8883E6/EV1-8-2500	2500 mm
in combination with	2010 mm
8852KU0-8-2010	

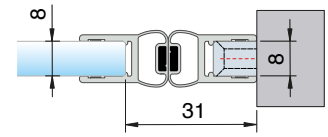

art-no.	length
8883E6/EV1-8-2500	2500 mm
in combination with	2010 mm
8850KU0-8-2010	

Trägerprofil **für**

sealing profile with **a reduced glass insertion**

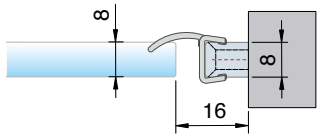

art-no.	length
8883E6/EV1-8-2500	2500 mm
in combination with	
8857KU0-8K-2500	2500 mm

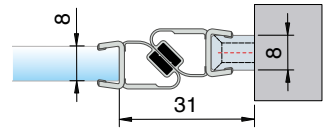

art-no.	length
8883E6/EV1-8-2500	2500 mm
in combination with	
8852KU0-8K-2500	2500 mm

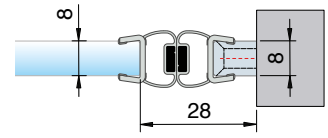

art-no.	length
8883E6/EV1-8-2500	2500 mm
in combination with	
8850KU0-8K-2500	2500 mm

art-no.-material/finish

KU0	plastic natural color opaque	KU3	plastic black opaque	KU35	plastic black mat	KU134	plastic white mat	KU5	plastic chrystal clear
KU7	plastic gloss chrome finish	E6EV5	aluminium special etched anodised gloss chrome finish	E6EV1	aluminium special etched anodised natural color	E6C35	aluminium deep black mat	E0/14	aluminium white powder coated, RAL 9016

splash guards - **round**

MADE IN GERMANY



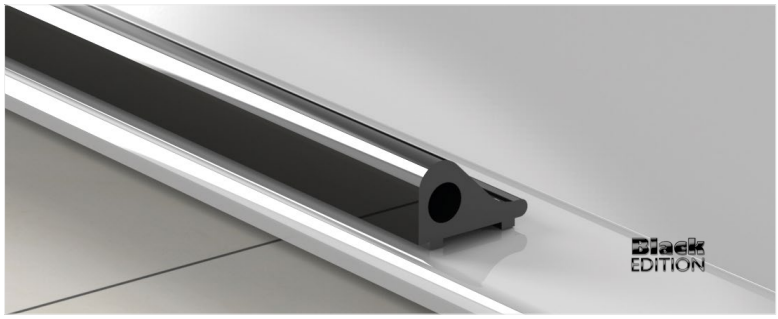

art-no.	length
8535E6EV5-1860	1860 mm
8535E0/14-1860	1860 mm
8535E6C35-1860	1860 mm

splash guard

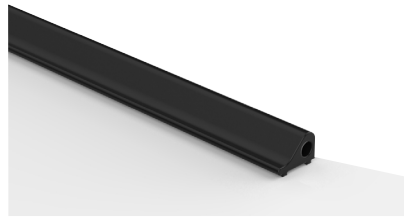

art-no.	length
8881E6/EV5-R500	1165 mm
8882E6/EV5-R550	1244 mm
8881E0/14-R500	1165 mm
8882E0/14-R550	1244 mm

splash guard for the lower shower edge, bent

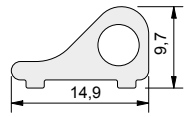



art-no.
SET-8536E6/EV5-90
SET-8536E0/14-90
SET-8536KU3-90

set:
1x end piece left,
1x end piece right,
1x splash guard corner 90°



art-no.	length
SET-8535E6EV5-1860	1860 mm
SET- 8535E0/14-1860	1860 mm
SET- 8535E6C35-1860	1860 mm

set:
1x splash guard
1x end piece left,
1x end piece right,
1x splash guard corner 90°

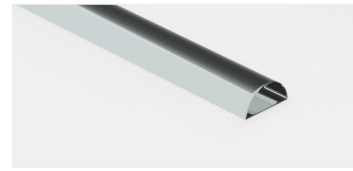

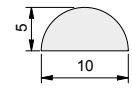

art-no.	length
8538KU5	2000 mm

acrylic semi-circular rod, radius = 5 mm, length 2000 mm

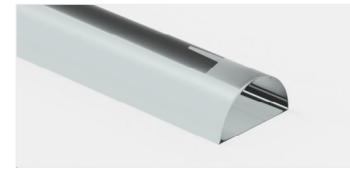

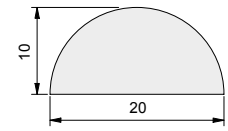

art-no.	length
8539KU5	2000 mm

acrylic semi-circular rod, radius = 10 mm, length 2000 mm

Splash protection

MADE IN GERMANY

Our all-glass showers feature a delicate and exclusive splash protection. However, complete watertightness cannot be achieved, as even when openingthe door(s), water residue may drip from the door surface onto the floor. In principle, water leakage cannot be completely ruled out when moving parts are involved. Through careful planning and the intelligent use of discreet sealing profiles and splash protection systems, water leakage can be significantly reduced.

If you choose not to use a splash guard or sealing profiles, you should expect increased water leakage. We offer a wide variety of seals that cansignificantly improve splash protection. For shower doors, you should always install a splash guard at the bottom to prevent increased water leakage. Our experts can offer you a wide range of solutions so we will be happy to advise you.

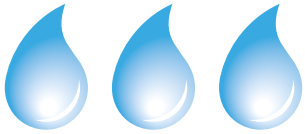

Without a sealing profile—more water can escape to the outside.

While showers without a sealing profile are unmatched in their elegance and are also very easy to clean, water tends to escape more easily to the outside.

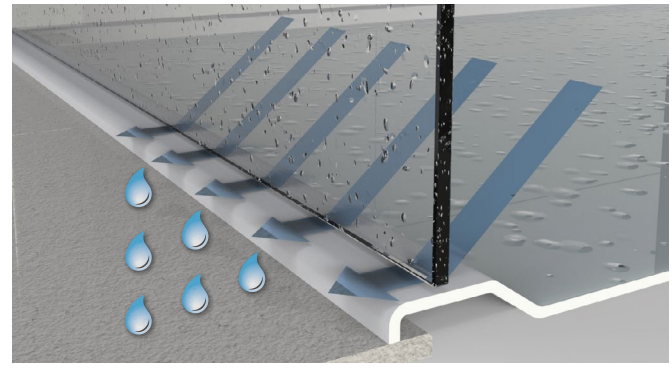

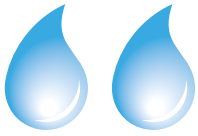

With a sealing profile - less water can seep out.

Showers with bulb-sealing profiles offer greater resistance to splashing water, and less water can seep out..

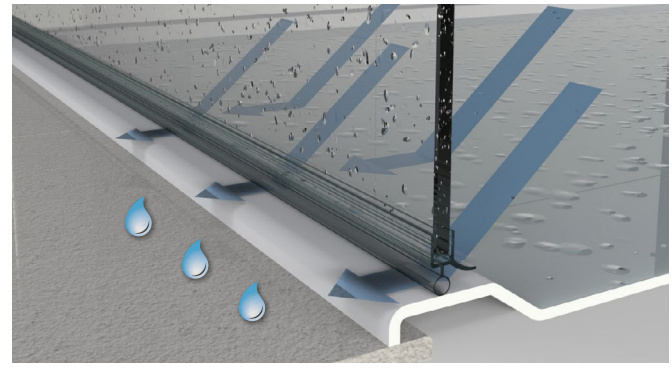



With a sealing profile and splash guard—virtually no water can escape to the outside.

Showers equipped with sealing profiles and a splash guard reduce water seepage to a minimum. They offer excellent splash protection.

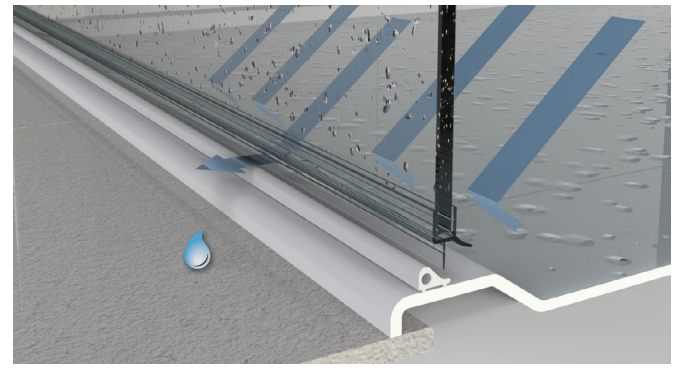

square **splash guards**



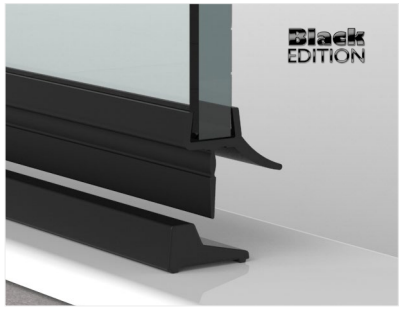

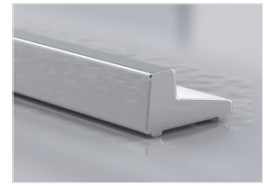

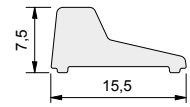

splash protection profile square cut length 2010 mm
Take into account possible contact points up to 12mm at the profile ends while cutting (in case these are not covered by the end caps)

article no.	
8585__-2010	
finish	
E6EV5	anodised gloss chrome finish
E6C35	black matt
AL134	white matt



end caps and **connectors**

for **square splash guards**

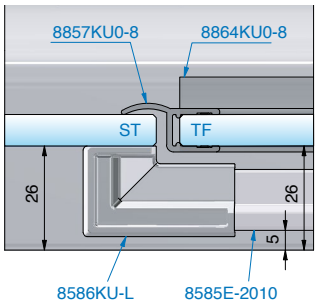

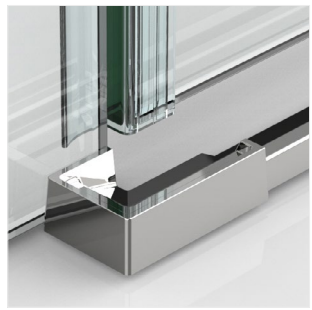

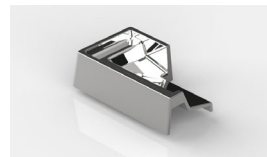

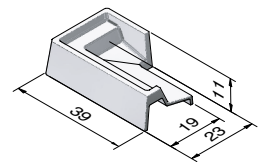

end cap left side

article no.	
8586__-L	
finish	
KU7	gloss chrome
KU3	black matt
KU134	white matt



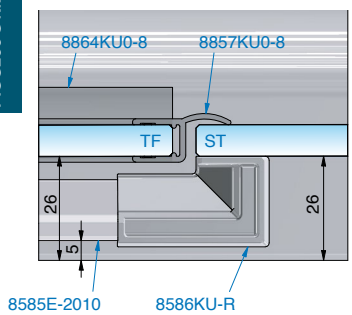

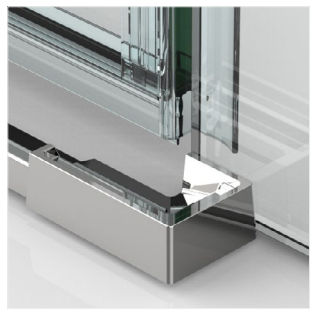

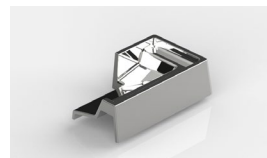

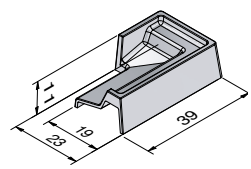

end cap right side

article no.	
8586__-R	
finish	
KU7	gloss chrome
KU3	black matt
KU134	white matt



ST = side panel TF = door panel

end caps and **connectors**

for **square splash guards**



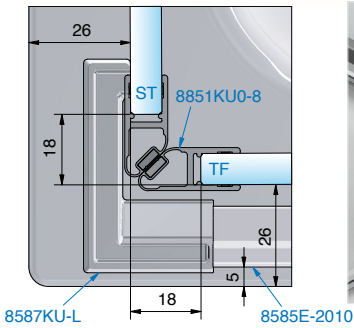

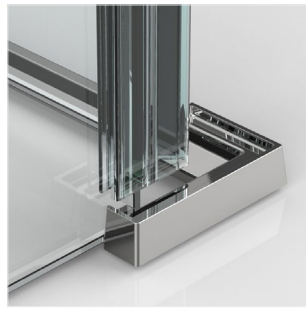

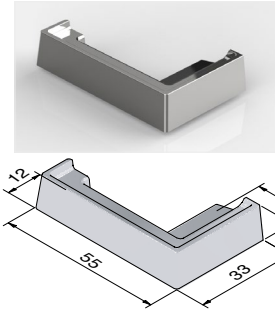

end cap left side

article no.

8587__-L



finish

	KU7	gloss chrome
	KU3	black matt
	KU134	white matt

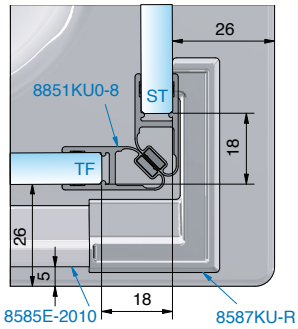

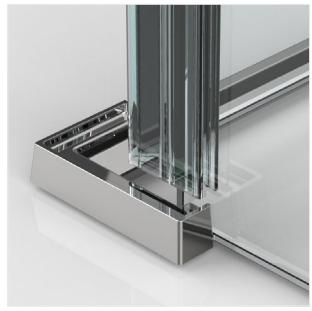

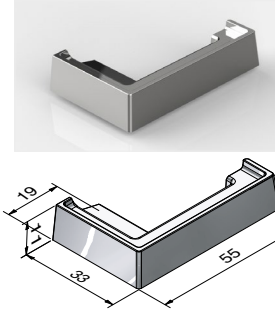

end cap right side

article no.

8587__-R



finish

	KU7	gloss chrome
	KU3	black matt
	KU134	white matt

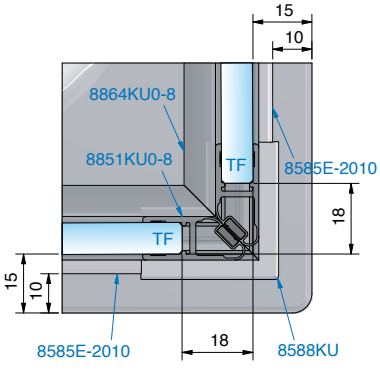

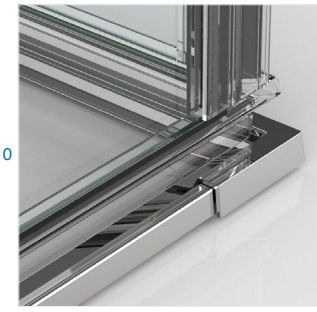

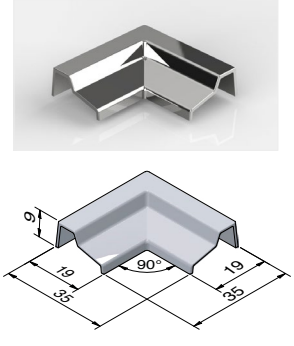

corner connector 90°

article no.

8588__



finish

	KU7	gloss chrome
	KU3	black matt
	KU134	white matt

ST = side panel TF = door panel

glass door lock

MADE IN GERMANY

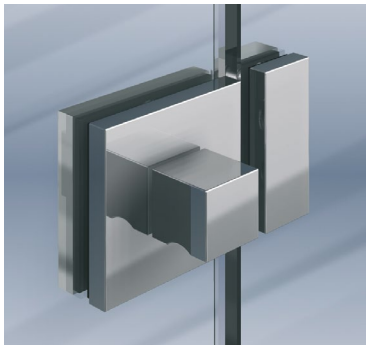
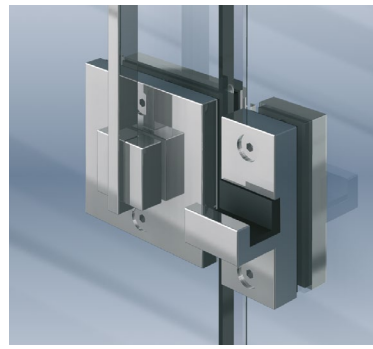
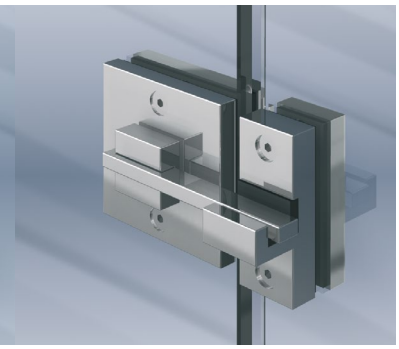
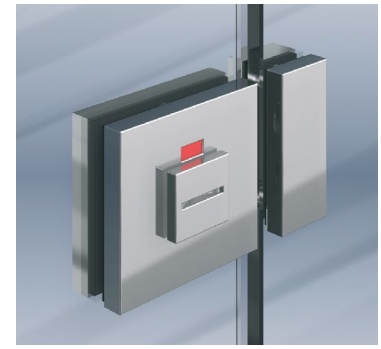

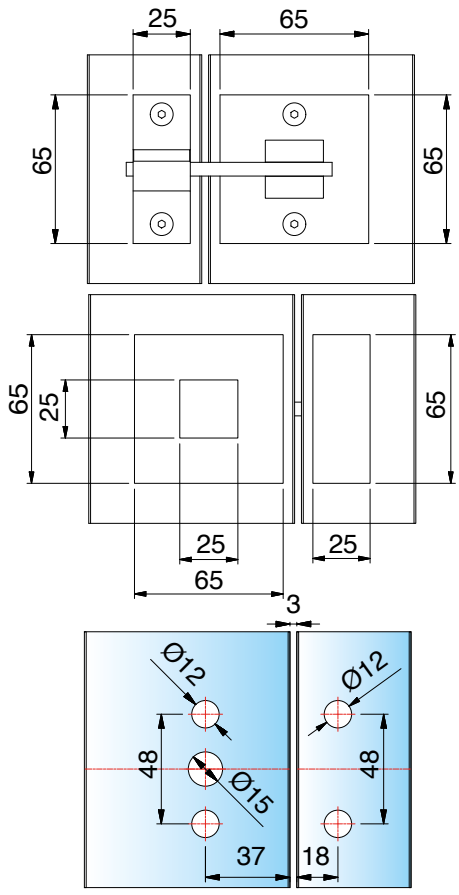

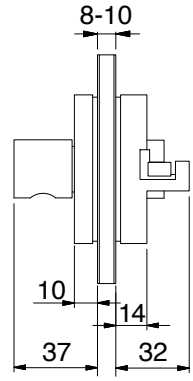

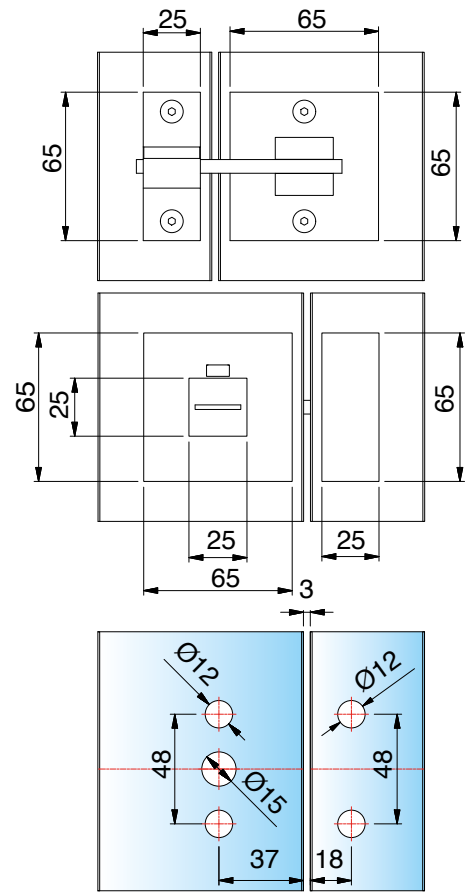

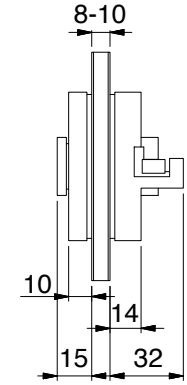

glass door lock with locker and striking box
with outer adjusting knob and locking pin inside

article no.	glass thickness
8374MS7	6-10 mm

finish

MS7	gloss chrome



glass door lock with locker and striking box
with viewing pane red/green and locking pin inside

article no.	glass thickness
8375MS_	6-10 mm

finish

MS7	gloss chrome



Not for busy and public areas! Ask us. We will help you.

glass door lock

MADE IN GERMANY



floor mount for vertical mount of glass		
Art.-Nr.	Glasdicke	
31322	8-12,76 mm	
Oberfläche		
VA	stainless steel	
VA1	stainless steel polished	
VA135	deep black matt	

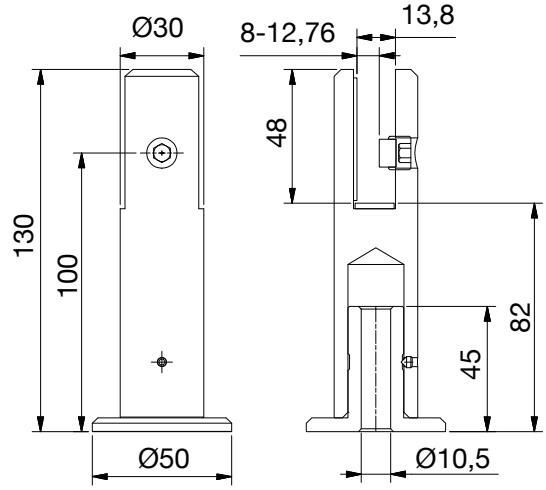



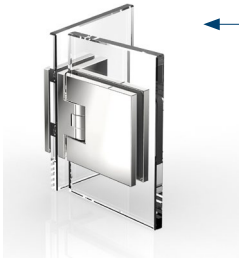

8375MS7

you can find the FLAMEA+ hinge 8136ZN on page 114.



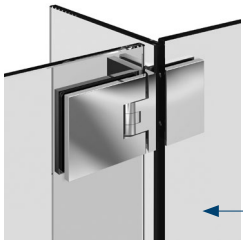

you can find the angle connector 8197ZN on page 137

you can find the FLAMEA+ in our catalog "world of interior".

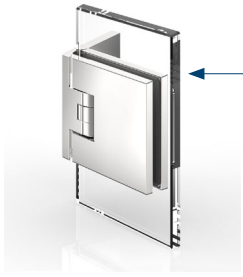

you can find the FLAMEA+ hinge 8130ZN on page 106.

For the stability of the shower, we recommend that you do not install the round or square support bar longer than 1200 mm.
A shower with a railing system over a certain size, will never have the same stability as a shower with a support bar and T-adapter.
Attention: Depending on load, door size and reqirements for the stiffness, additional bracing parts will be required. Depending on size of the side parts, the quantity of the ground anchors has to be adapted. Doors have to be limited regarding their opening path. For that purpose, overopening limitations and and opening limiter have to be installed. Our application engineers would appreciate to assist you.

sliding door lock

MADE IN GERMANY



glass door lock
mounting of handles possible on either side, lock rosette self-adhesive

article no.	glass thickness
3441__-SAG	8 - 12,76 mm

1/1

finish

	ZN5	gloss chrome
	ZN1	matt chrome
	ZNPVD22	stainless steel optic
	ZN135	deep black matt

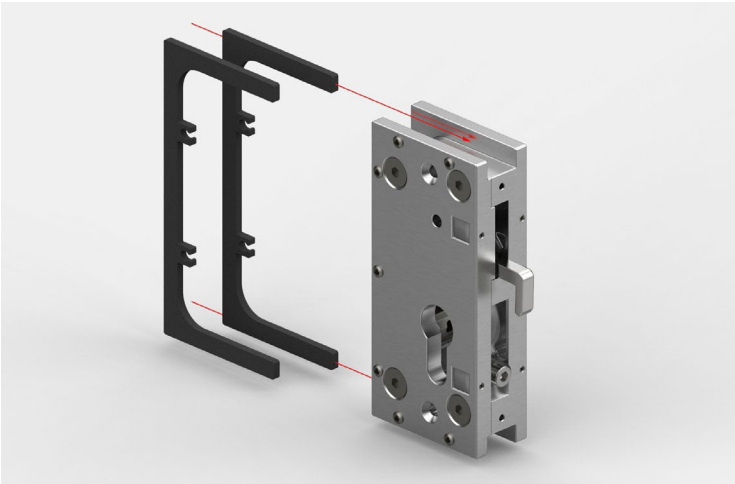

Please order the corresponding contact material sets as well:

article no.	glass thickness	
HX-SET11	8 - 12,76 mm	contact material set 11
HX-SET12	10-10,76 mm	contact material set 12
HX-SET13	12-12,76 mm	contact material set 13

1/1

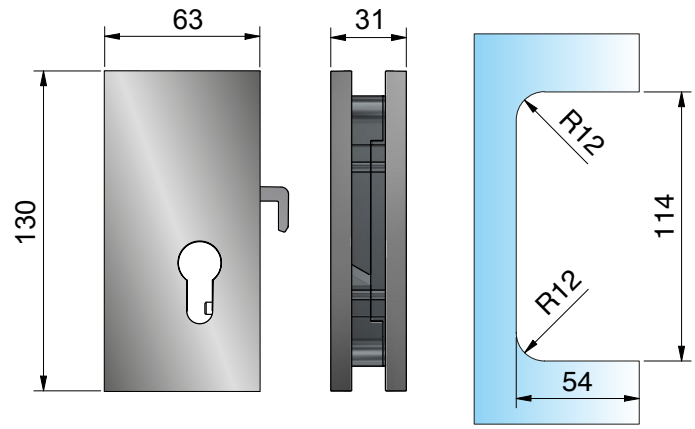

information regarding the hole in the cover cap for the handle:

- Ø 6,5mm
- The cover cap is already centre-punched at the factory at the point where the hole is to be drilled.

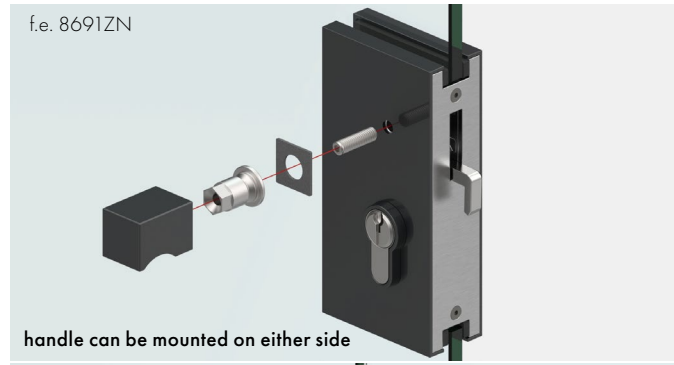

handle can be mounted on either side

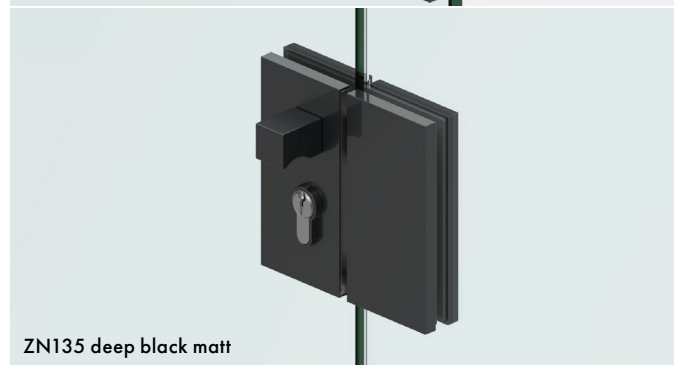

ZN135 deep black matt

sliding door lock

MADE IN GERMANY





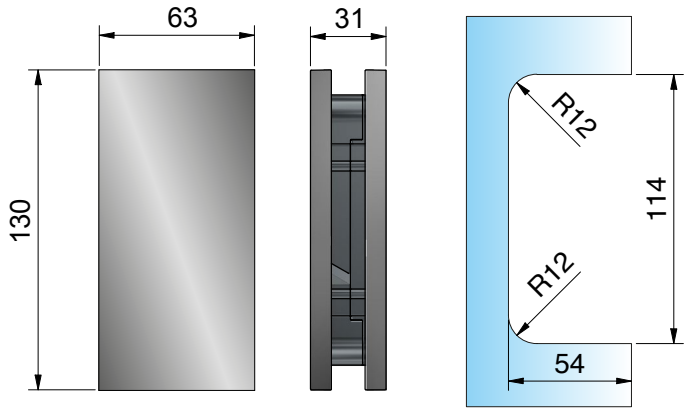

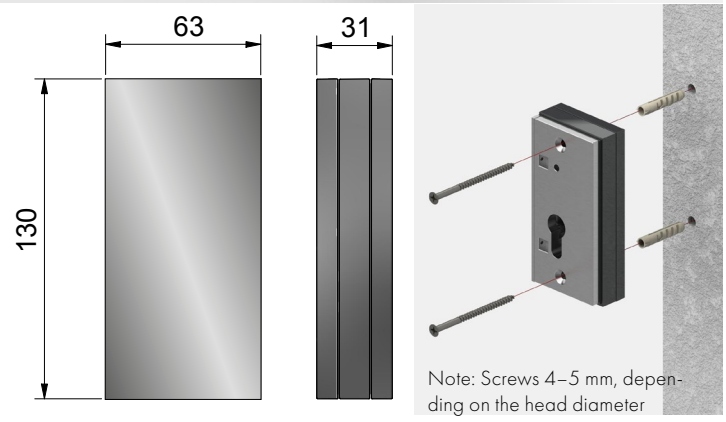

Note: Screws 4–5 mm, depending on the head diameter

lock-box for glass mounting

article no.	glass thickness
3441__-GKAG	8 - 12,76 mm

finish		
	ZN5	gloss chrome
	ZN1	matt chrome
	ZNPVD22	stainless steel optic
	ZN135	deep black matt

lock-box for wall mounting
concealed holes for mounting behind the covers

article no.
3441__-GKAW

finish		
	ZN5	gloss chrome
	ZN1	matt chrome
	ZNPVD22	stainless steel optic
	ZN135	deep black matt



Euro short cylinder

article no.
3441MS-SZ
3441MS-SZH



lock rosette

article no.
3441__-RS

finish		
	ZN5	gloss chrome
	ZN1	matt chrome
	ZNPVD22	stainless steel optic
	ZN135	deep black matt

Lock with lock indicator

MADE IN GERMANY



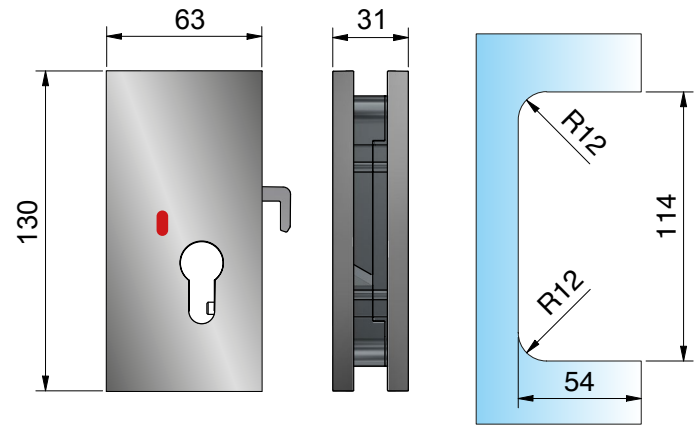

glass door lock
mounting of handles possible on either side, lock rosette self-adhesive

article no.	glass thickness
3441__-SAG	8 - 12,76 mm

finish

	ZN5	gloss chrome
	ZN1	matt chrome
	ZNPVD22	stainless steel optic
	ZN135	deep black matt

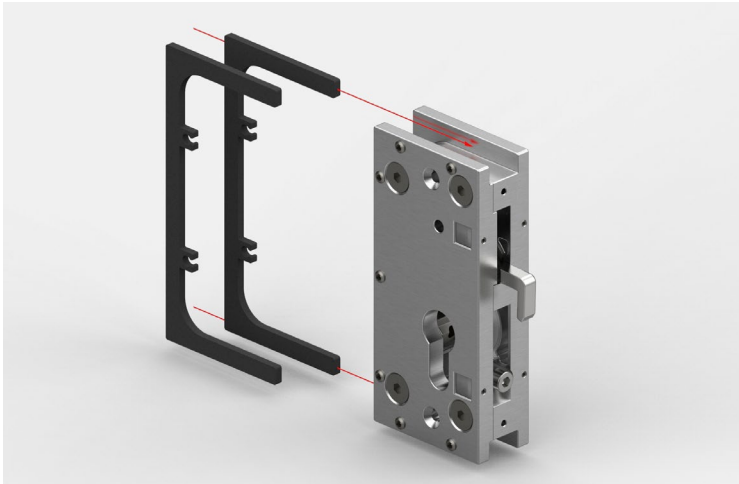

Please order the corresponding contact material sets as well:

article no.	glass thickness	
HX-SET 11	8 - 12,76 mm	contact material set 11
HX-SET 12	10-10,76 mm	contact material set 12
HX-SET 13	12-12,76 mm	contact material set 13

Additional information for 3441-SWC and 3441-SAG:

For Euro short cylinders
P+S recommendation:
ISEO-F5-21/21 (P+S Item No.: 3441MS-SZ)

Compatible with:
EURO minus F3 short cylinder 21/21
ISEO F3 short cylinder 21/21
ISEO F5 half cylinder 25/10 (P+S Item No.: 3441MS-SZH NOTE: The lock cover plate does not provide full coverage)
ABUS 2 F3 short cylinder 21/21
EVVA ICS double cylinder 27/27 (NOTE: The lock cover plate does not provide full coverage)

NOT compatible with:
ABUS BRAVUS 2000 21,5/21,5
ABUS Y21A 21/21
EVVA Short Cylinder 21/21

Optional:
- Handles can be mounted on either side
- Self-adhesive lock cover plate
- Spacer for wall mounting

- Ø 6,5mm
- The cover cap is already marked with a center punch at the point where the hole needs to be drilled

Lock with lock indicator

MADE IN GERMANY

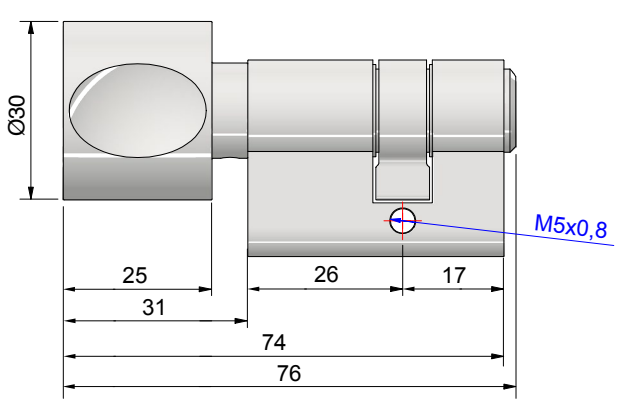

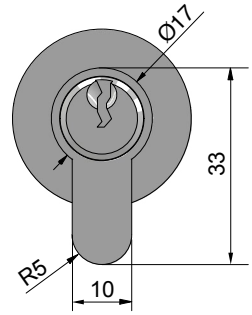

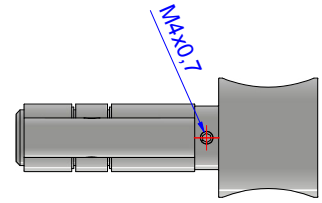

Lock cylinder with knob for lock 3441ZNX-SAG / 3441ZNX-SWC

article no.	glass thickness
3441__-SZK	8-12,76 mm

finish	
MS7	gloss chrome
MS10	matt chrome
MSPVD35	black matt



Euro short cylinder

article no.

3441MS-SZ

3441MS-SZH

1/1



lock rosette

article no.

3441__-RS

1/1

finish

ZN5	gloss chrome
ZN1	matt chrome
ZNPVD22	stainless steel optic
ZN135	deep black matt

glass panels

MADE IN GERMANY



general remarks for bent glass:

tolerance:

- dimensional tolerances = ±2 mm per running meter
- offset (twist) = max. ±3 mm per running meter
- deflection of the height edges = max. ±3 mm per running meter
- deviation of contour accuracy = max. ±3 mm per running meter
- curvatures in the area of the run-off edges possible

anisotropies:
Anisotropies are formed in glass that has undergone a thermal tempering process. The different stress zones result in birefringence. A birefringence occurs due to the different stress zones of the light rays. Only the polarized parts of the daylight make this phenomenon visible through spectral colored rings, cloud images and the like. These appearances are production-related and are not reasons for complaint.





glass panels

MADE IN GERMANY





8570VA R500



8522VA

glass-set for 8570VA R500
glass processing:
tempered safety glass 8 mm,
all edges ground and polished

shower tray: 900 x 900 mm for R500
shower height*: 2000 mm

consisting of:

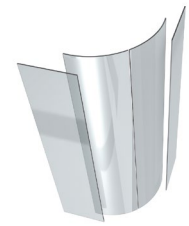

article no.	article description	pieces
8581-1GLAS-R500**	door panel right, TSG 8 mm for round showers	1
8581-2GLAS-R500**	door panel left, TSG 8 mm for round showers	1
8581-3GLAS-900**	side panel for round shower 8570VA	2

glas-sset for 8522VA
glass processing:
tempered safety glass 8 mm,
all edges ground and polished

Ø 1080mm
shower height*: 2000 mm

consisting of:

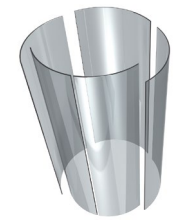

article no.	article description	pieces
8525-1GLAS-R515**	door panel right, TSG 8 mm for round showers	1
8525-2GLAS-R515**	door panel left, TSG 8 mm for round showers	1
8525-3GLAS-R540**	side panel for round shower 8522VA	3

* up to the bottom edge guiding rail
** *article discontinued

glass panels for FARFALLA

MADE IN GERMANY





type 501



type 503

article no.	article description
8144-1GLAS-R500	bent door panel for FARFALLA h 2000 mm, R500
8143-1GLAS-R550	bent door panel for FARFALLA h 2000 mm, R550



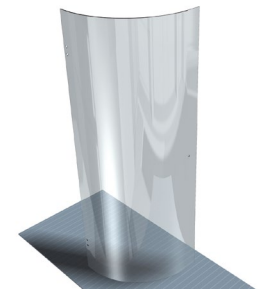

glass processing:
tempered safety glass 6 mm, clear: 1 bore ø 14 mm;
4 bores ø 18 mm all edges ground and polished

glass panels for FARFALLA

MADE IN GERMANY





type 502

article no.	article description
8147-1GLAS-R500	bent door panel for FARFALLA h 2000 mm, R500
8147-1GLAS-R550	bent door panel for FARFALLA h 2000 mm, R550



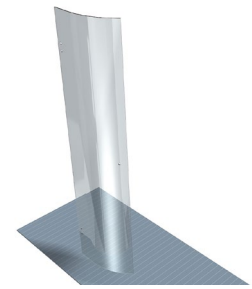

glass processing:
tempered safety glass 6 mm, clear: 1 bore ø 14 mm;
4 bores ø 18 mm all edges ground and polished

Installation aids

MADE IN GERMANY



article no.	article description	pu/ pieces
8001ST8	torque wrench with setting scale (2,5 - 25 Nm) - automatic triggering	1/1

accuracy: ± 3 % of indicated

version: robust torque wrench, adjustable with micrometer scale, with protection against accidental changes to the setting. integral ratchet to accept sockets. Size 20 – with reversible ratchet and fixed square drive pin – only for right-hand tightening.

function: on reaching the set torque value the wrench triggers "indicating" (audibly and perceptible) and is then again immediately ready for use.

application: for controlled tightening of screws to pre-set torque.

8001ST8, torque wrench with setting scale		
size = maximum torque	Nm	25
tightening value (scale range)	Nm	2,5-25
scale graduation, 1 graduation =	Nm	0,1
overall length	mm	230
weight	kg	0,4
square drive inch	Zoll	1/4

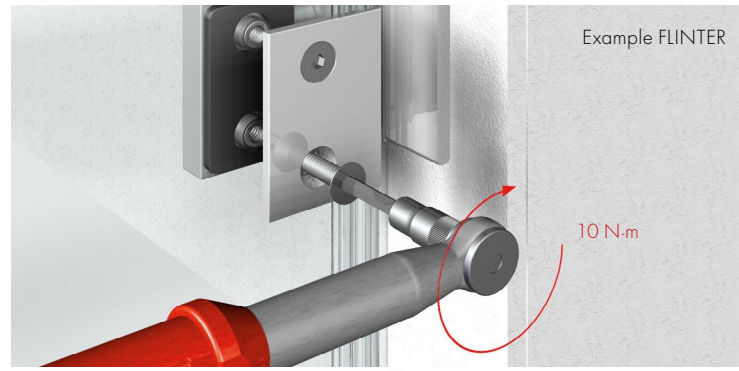

for adjustment of the VIVERE extender weel



article no.	article description	pu/ pieces
Z058	adjustable face spanner Ø 3 mm	1/1

for installation of point-fixed, e.g. for 7772VA

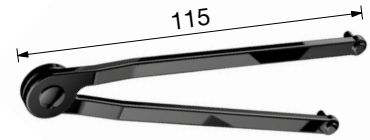

article no.	article description	pu/ pieces
Z059	adjustable face spanner Ø 2,5 mm	1/1



article no.	article description	pu/ pieces
Z061	scissors for sealing profiles	1/1
Z061-1	1x replacement blade for Z061	1/1
Z061-5	5x replacement blade for Z061	1/1



article no.	strength	article description	pu/ pieces
Z104-2.5	2,5 mm	HEX-BIT, HEX-PLUS, L=50MM	1/1
Z104-2	2 mm		
Z104-3	3 mm		
Z104-4	4 mm		

Installation aids

MADE IN GERMANY



article no.	article description	pu/ pieces
8822KU-ML	mounting aid for gluing door handles on to the glass	1/1

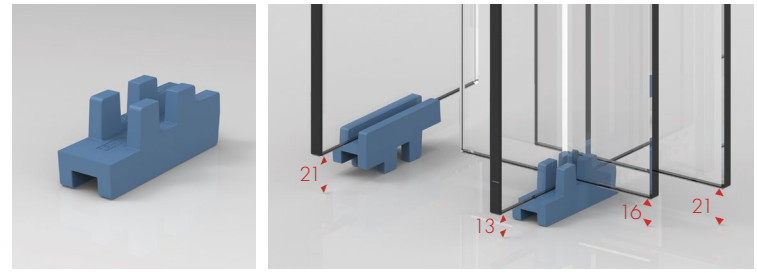

article no.	article description	pu/ pieces
8840KU-PS	assembly aid support for shower doors	1/1

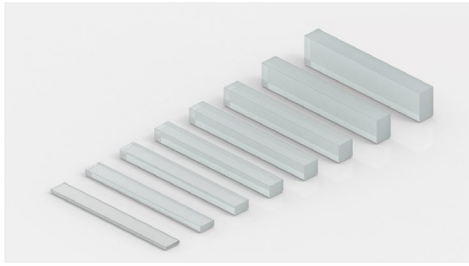

article no.	strength	article description	pu/ pieces
8890-1KU0-1	1 mm	assembly aid - spacer and support block	25
8890-1KU0-2	2 mm		
8890-1KU0-3	3 mm		
8890-1KU0-4	4 mm		
8890-1KU0-5	5 mm		
8890-1KU0-6	6 mm		
8890-1KU0-8	8 mm		
8890-1KU0-10	10 mm		

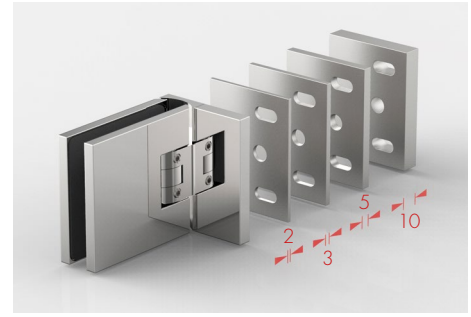

example application for 8130ZN

Art.-Nr.	Oberfläche	Stärke	Artikelbezeichnung	VE
8130-30MS7-2	gloss chrome	2 mm	compensation shim	1/1
8130-30MS7-3		3 mm	for 8130ZN	
8130-30MS7-5		5 mm		
8130-30MS7-10		10 mm		
8134-30MS7-2		2 mm	compensation shim	1/1
8134-30MS7-3		3 mm	for 8134ZN	
8134-30MS7-5		5 mm		
8134-30MS7-10		10 mm		
8180-30MS7-2		2 mm	compensation shim	1/1
8180-30MS7-3		3 mm	for 8180ZN	
8180-30MS7-5		5 mm		
8180-30MS7-10		10 mm		
8313-30MS7-2		2 mm	compensation shim	1/1
8313-30MS7-3		3 mm	for8313ZN	
8313-30MS7-5		5 mm		
8313-30MS7-10		10 mm		
8314-30MS7-2		2 mm	compensation shim	1/1
8314-30MS7-3		3 mm	for 8314ZN	
8314-30MS7-5		5 mm		
8314-30MS7-10		10 mm		

combined in one bag; each 100 x 80 mm

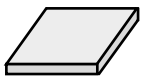

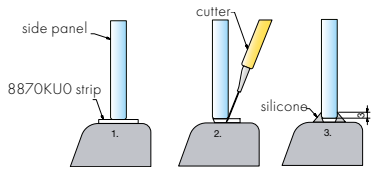

article no.	article description	pu/ pieces
8870KU0	each 2 plates of soft PVC in 2 and 3 mm thickness	1/1

glass thickness: 6-10 mm

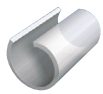

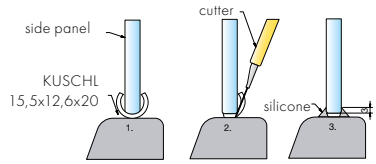

article no.	article description	pu/ pieces
KUSCHL15.5X12.6X20	plastic tubing (1,5 mm) for security glass edges	1/1

installation with **Aqua Stop Pro**

MADE IN GERMANY

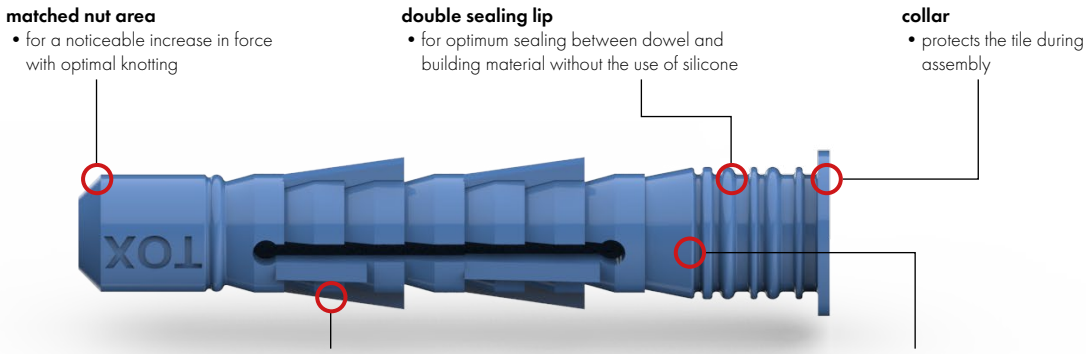

The dowel only functions when used with the special screw; see pp. 641–642

- sealing all-purpose dowel for fastening to tiled wallsand floors in private and commercial rooms such as bathrooms, showers, kitchens etc.
- Dowel made of high-strength and durable HDPE performance plastic
- the collar can be removed if necessary without impairing the sealing function of the Aqua Stop
- double sealing lips for optimal sealing between the dowel and building material without the use of silicone
- optimized all-purpose geometry for simplified knotting
- special HDPE material: no change in material properties upon contact with water
- collar protects the tile during installation
- eight locking wedges to prevent rotation during installation
- independently tested by the German Institute for wall and floor surfacing „Säurefliesner-Vereinigung e.V."



Weitere Informationen in der Produkt-Broschüre:

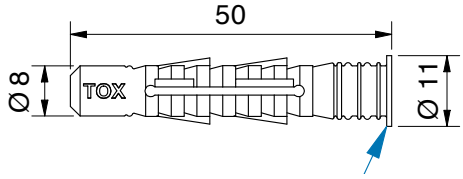

The collar can be removed, if necessary without impairing the sealing function of the Aqua Stop



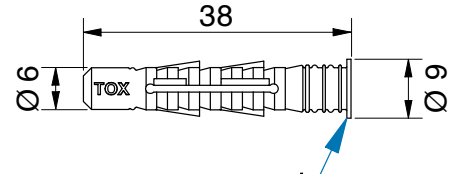

The collar can be removed, if necessary without impairing the sealing function of the Aqua Stop

article no.	article description
DUEBEL-AS-8X50MM	dowel AQUA STOP 8X50

Art-Nr.	Bezeichnung
DUEBEL-AS-6X38MM	dowel AQUA STOP 6X38

installation with **Aqua Stop Pro**

MADE IN GERMANY

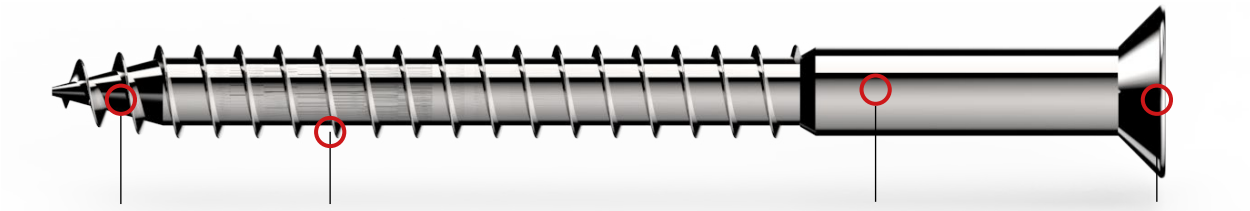

stainless steel

wood screw
- for a safe and secure installation

partial thread with shaft
- for permanent, optimum sealing between dowel and screw

countersink head screw
- optimum head geometry for the most common applications
- Torx drive for optimum force transmission

The dowel from TOX in combination with our screw offers a tested system and is compatible with almost all our fittings and many wall materials. The screw may **not be threaded** near the head. A screw with a continuous thread would cut the sealing surfaces in the upper area. The reinforced shank is required for sealing. Other screw combinations are not permitted.

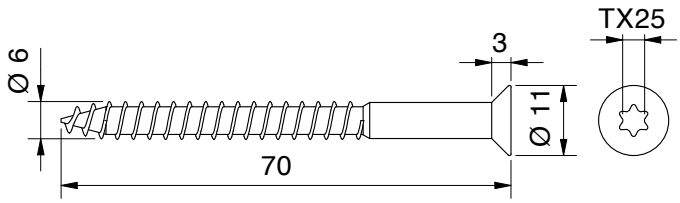

screw with thread and shank according to DIN 7997

Art-Nr.	Bezeichnung
S7997A2D6x70TX*	Torx screw for dowel 8x50 Aqua Stop Pro

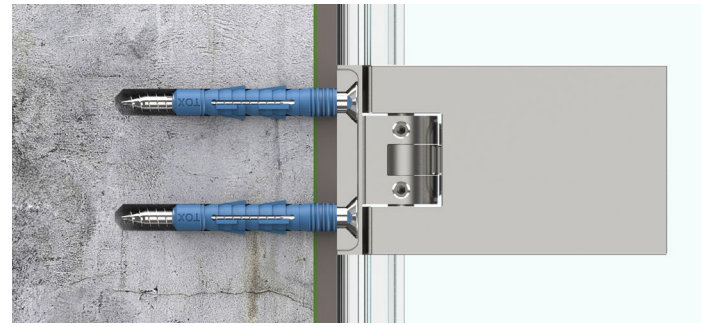

application with shower door hinge

1 Purpose of the Test
To verify the watertightness of the TOX Aqua Stop Pro Ø 8 mm all-purpose waterproofing anchor (without collar) in combination with mounting parts and screws from Pauli + Sohn GmbH
Test Basis:Based on DIN 18534 (28-day test with a rising water column H = 20 cm).
2 Test Materials
The mounting components and screws were provided by Pauli + Sohn. The anchors were taken from series production, and the collar was removed after installation.

Dowel	TOX Aqua Stop Pro 8x50 (without collar)	HDPE	
Screw	Countersink screw according to DIN 7997 with TX drive	Stainless steel	
Attachment 1	Shower Swing Door Hinge Flamea+ Art. Nr. 8130ZN5	gloss chromed	
Attachment 2	Angle bracket Flamea+ Art. Nr. 8194ZN5	gloss chromed	



TOX-Dübel-Technik GmbH

TOX-Dübel-Technik GmbH
Brunnenstraße 31
D - 72505 Krauchenwies-Ablach

Bericht
Nr. V2023-045-1
Pauli + Sohn GmbH

Datum: 04.07.2023
Auftraggeber: Pauli + Sohn GmbH
Gegenstand: Aqua Stop Pro 8mm ohne Kragen in Verbindung mit Anbauteile und Schrauben von der Firma Pauli + Sohn GmbH
Prüfer: D. Wilhelm (B.Eng.)

Inhalt
1 Versuchsgrund ... 2
2 Versuchsmaterial ... 2
3 Versuchsaufbau und Montage ... 2
4 Ergebnis Zusammenfassung ... 2

*Extract from the German test certificate. Please ask for a translation, if required.

installation with **Aqua Stop Pro**

MADE IN GERMANY

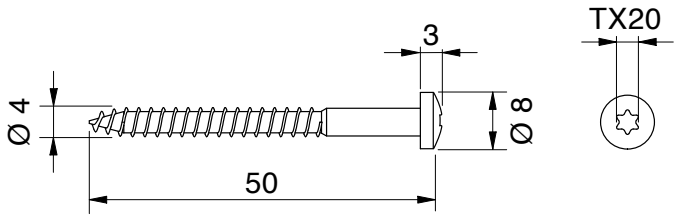

Screw with thread and shank in accordance with DIN 7995

article no.	article description
S7996A2D4x50TX*	Tx-Screw for dowel 6x38 Aqua Stop Pro

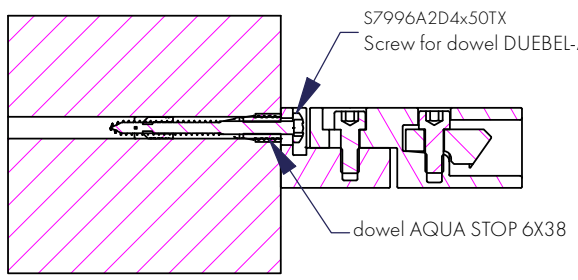



Installation using stabiliser bars – wall connection

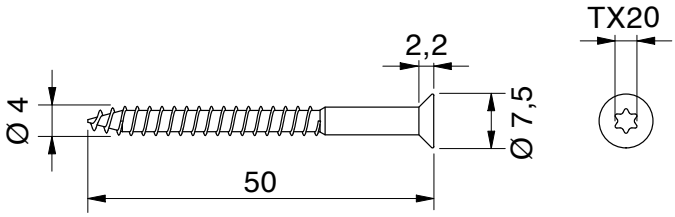

Screw with thread and shank in accordance with DIN 7995

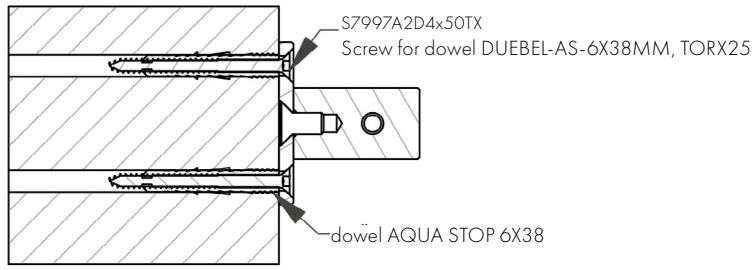



Application with door stop

* In Vorbereitung

installation aids

MADE IN GERMANY



article no.	article description	pu/pieces
Z092VA Z092VA5 Z092VA6	spax screw, countersink, TX25 drive 6x60 A2	1/1

VA5 = stainless steel gloss chrome finish VA6 = stainless steel matt chrome finish



article no.	article description	pu/pieces
7083-1VA	countersink wood screw recessed 6 x 50 mm	1/1
S7997A2D5X60	countersink wood screw recessed 5 x 60 mm	1/1

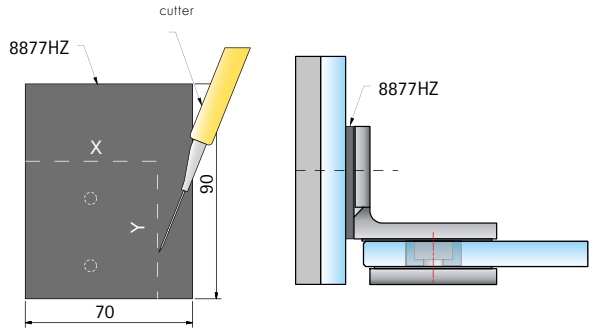

article no.	article description	pu/pieces
8877HZ	for installation of hinges for glass walls	1/1



suitable for the series:
FLAMEA+ sauna and FARDELLO sauna

article no.	article description	pu/pieces
8878FKM-1	insert for glass cutout, 300x8x1 mm	1/1
8878FKM-2	insert for glass cutout, 300x8x2 mm	

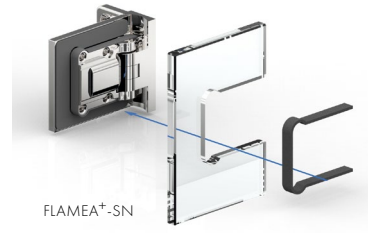
FLAMEA+-SN

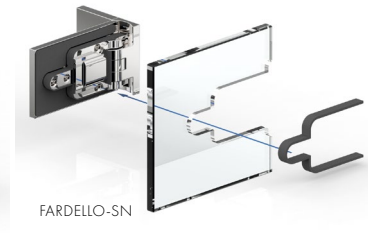
FARDELLO-SN

installation aids

MADE IN GERMANY



article no.	article description	pu/pieces
147004PS	Cutter knife with snap-off blade	1/1



article no.	article description	pu/pieces
147008PS	block lever	1/1



article no.	article description	pu/pieces
147012PS	Foam cleaner for glass, spray can, 600 ml	1/1



article no.	article description	pu/pieces
147181PS	Glass cleaner, spray bottle, 500 ml	1/1

installation aids

MADE IN GERMANY

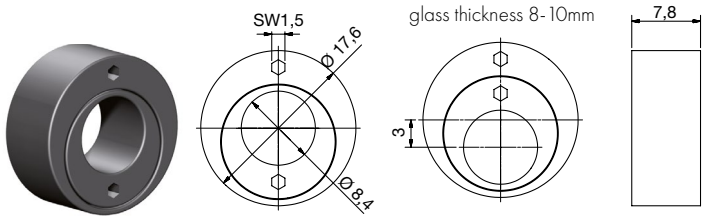

excenter sleeve position: center – no offset –

excenter sleeve position: - max. offset -

position of excenter sleeve can be freely selected, adjustment by a hexagon socket wrench SW1.5mm

article no.	article description	pu/pieces
8121KU	double excenter sleeve for shower door hinge FARFALLA, PILLANGO and PAPILLON, sas well as for all fixations with glass drilling Ø 18mm and stud Ø 8,2mm	1/50

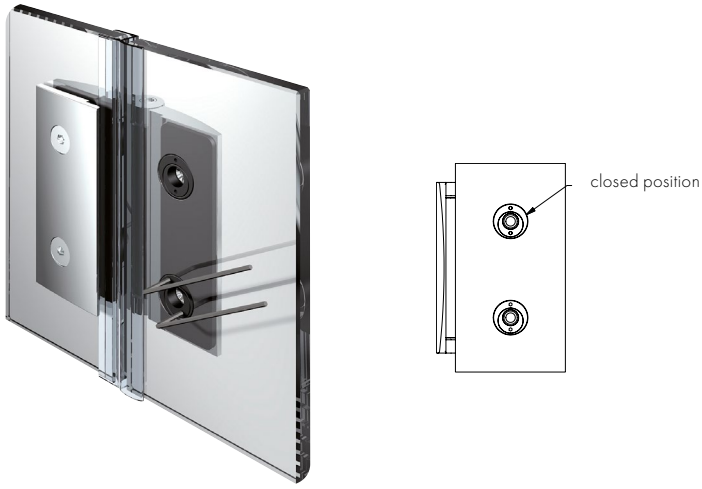

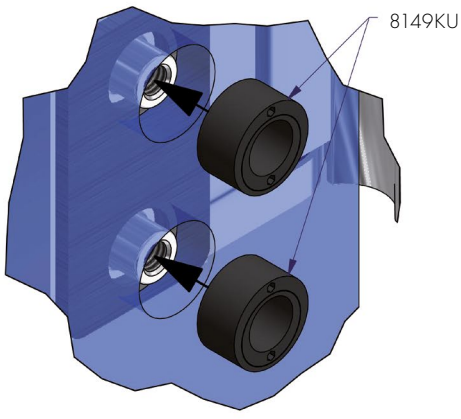

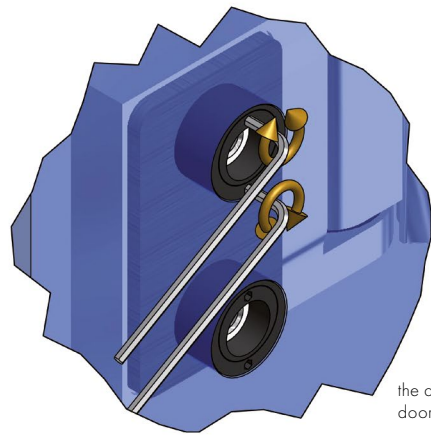

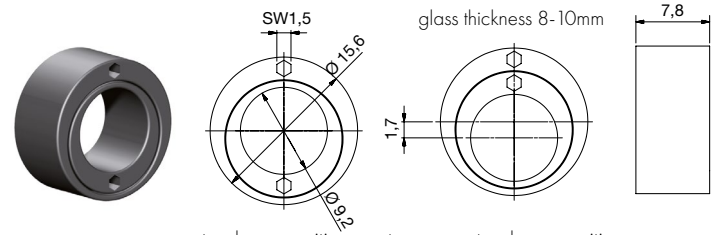

excenter sleeve position: center – no offset –

excenter sleeve position: - max. offset -

angle can be freely selected, adjustment by a hexagon socket wrench SW1.5mm

article no.	article description	pu/pieces
8149KU	double excenter sleeve for shower door hinge FLINTER and NIVELLO, as well as for all fixations with glass drilling Ø 16mm and stud Ø 9mm	1/50



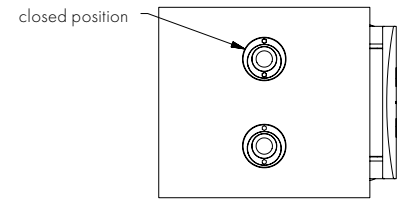

the double excenter sleeves permit a better centering and fixation of the shower door hinge in the glass drilling.

installation aids - other

MADE IN GERMANY



article no.	article description	pu/pieces
C85	sample case striker hinges	1/1



article no.	article description	pu/pieces
C86	sample case accessories	1/1



article no.	article description	pu/pieces
C91	sample case EVERYSPACE/Walk in	1/1



article no.	article description	pu/pieces
C108	sample case PONTERE+, FLAMEA pro, FLAMEA pro mini, FARDELLO	1/1

other

MADE IN GERMANY

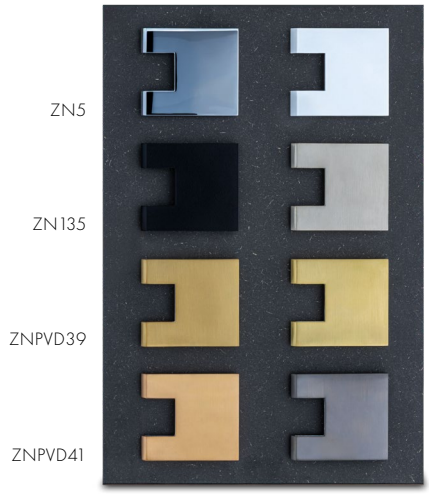

article no.	article description	pu/pieces
C114	sample plate, overview of standard surface colors	1/1



article no.	article description		pu/pieces
C40	display for product samples	FLAMEA	1/1
C41	display for product samples	FLINTER	1/1
C42	display for product samples	FLUTURE	1/1
C44	display for product samples	FARFALLA	1/1
C47	display for product samples	VIVERE II	1/1
C48	display for product samples	NIVELLO	1/1
C49	display for product samples	NIVELLO+	1/1
C55	display for product samples	FLAMEA+	1/1
C87	display for product samples	PAVONE	1/1
C89	display for product samples	FARDELLO	1/1
C90	display for product samples	TURA	1/1
C92	display for product samples	EVERYSPACE	1/1

ZN5
ZN1
ZN10
ZNPVD20
ZNPVD22
ZNPVD35



ZN134
ZN135
ZNPVD39
ZNPVD40
ZNPVD41
ZNPVD42

article no.	article description	pu/pieces
C113	Sample fans, double-sided, overview of standard finishes including backing plates with all available finishes	1/1

description

- special cleaner for the care of high-quality hardware and all metal surfaces
- for refined surfaces
- gentle cleaning and easy application
- reliably removes lime, grease and soap stains

application

Apply some gentle care to a soft, damp cloth and rub the surface to be cleaned without pressure. After a short reaction time, rinse thoroughly with clear water. Then polish with a soft, dry cloth.
Repeat the process for stubborn incrustations.

Please contact our technical department to request the technical data sheet and the warning/ information sheet!

Art.-Nr.	Artikelbezeichnung	VE/Stück
8203CTP	gentle care anfte Pflege – Reinigungsmittel für Duschbeschläge Inhalt 250 ml	1/1



not suitable for swimming pools

ACCESSORIES


Pauli + Sohn
SWS
GLASSYSTEME
DEUTSCHE METALL
WEBSHOP
FLAMEA

glass calculation for EVERYSPACE

MADE IN GERMANY

Use our new planning tool at **pauli.de/en/cloud** for the calculation of glass sizes. Need more help? We can support you in every phase of your project. Just give us a call – 02291 9206 0.

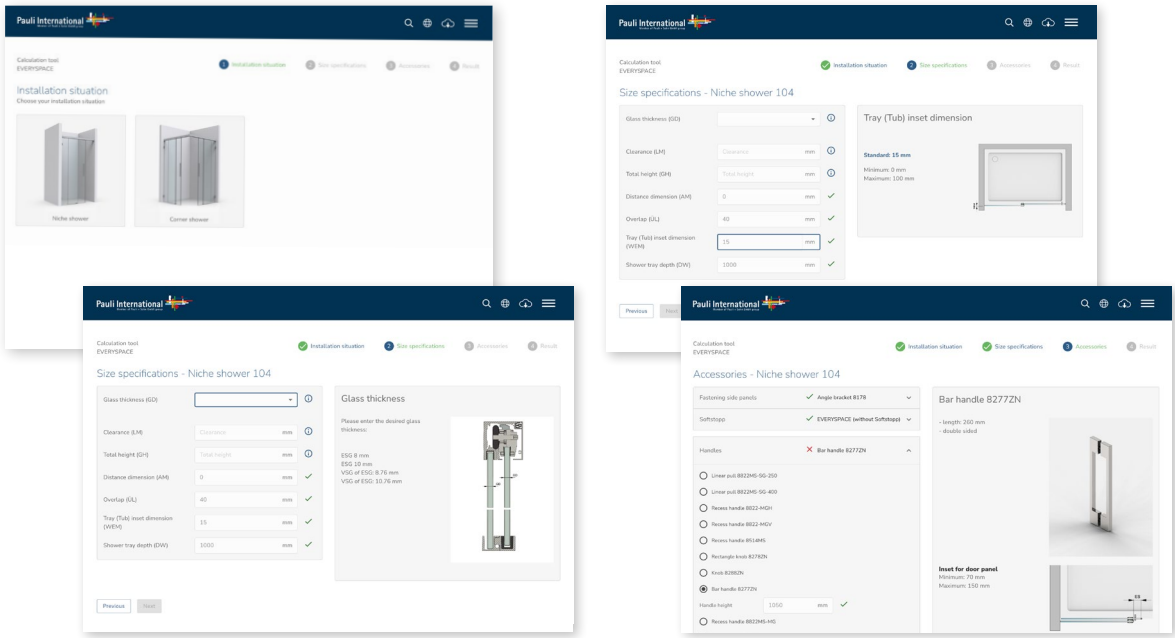

www.pauli.de/en/login

product presentation EVERYSPACE

Pauli + Sohn
seminar dates
pauli.de/en/terminkalender/

up-to-date with Pauli Academy

PAULI AKADEMIE
PROGRESS THROUGH KNOWLEDGE



The Pauli Academy is the training Department of Pauli + Sohn which teaches relevant knowledge of the construction sector. As one of the leading manufacturers for glass hinges, Pauli + Sohn traditionally sets standards in terms of variety of products, design and safety. the training courses are tailor-made for designers, distributors and technicians.

Additionally, you are able to find lots of valuable inspirations of the Pauli + Sohn product portfolio within our training center. Due to the close collaboration of technicians and designers, our products are innovative and design-orientated at the same time. Details will be created, which cannot be missed in the future, techniques can be found which let familiar problems disappear forever. Moreover, we implement the continuous feedback of our customers in the training courses in order to improve from good to better! You can find further information about our schedule for training courses on our homepage **www.pauli.de/en**. As not every customer is near our training centres, the Pauli Academy also offers training courses at selected partners. Please get in contact with out specialists in Waldbröl!







our range of seminars

MADE IN GERMANY

Benefit from our knowledge and our wealth of experience in the shower sector. Wheter workshop, basic-seminars or the shower master programm, the experts and specialists at the Pauli Academy will support you professionally and will keep you always up-to-date.

Note: seminars are currently held in the German language only.
English upon request.

current dates:

D10 – New Technical Guideline TR 24

basics, products and applications

- basics of standards and technical guidelines
- safety and stability
- glass dimensions
- assembly, sealing, fastening
- care and maintenance
- comparison of the existing DIN EN 14428 with TR 24
- Pauli all-glass shower systems in the context of the standard
- example applications

requirements: none
A certificate for the seminar will be issued.

showers: Pro - mounting/installation - seminar and Workshop

fundamentals and practical exercises

- get to know systematical basic-knowledge for measurements on site
- fundamentals and practical exercises
- proper installation
- analyze situations and learn from mistakes
- working with measurement and glas order drawings
- workshop shower installation incl. proper cut of sealing profiles

requirements: basic seminar shower or shower master level 1
a certificate will be issued for this seminar

shower master programm

multi-stage seminar programm up to the shower-professional

The owner of the certificates of the shower master programm of the Pauli Acedamy proofes that the usage of P + S shower systems has been trained comprehensively.
The shower master knows the requirements of DIN EN 14428 as appropriate legal basis and has expertise to support the customer professionally up to the installation of the product. There by the shower master is able to judge and evaluate structural conditions on site in order to find optimal solutions starting from measuring on-site up to the installation of a glass shower.

For further information to this particular training program, please refer to the next double page.

the road to the shower master

MADE IN GERMANY



With the achievement of the shower master, the graduate is able to evaluate structural conditions on site comprehensively and realize the best solutions starting from measurement on-site up to the installation of glass shower systems. You will get in touch with the proper selection and the cut of sealing profiles as well as with the planning and creating of glass drawings by using the Pauli "shower configurator".
Due to this knowledge, quality and efficiency increase significantly during you daily business.

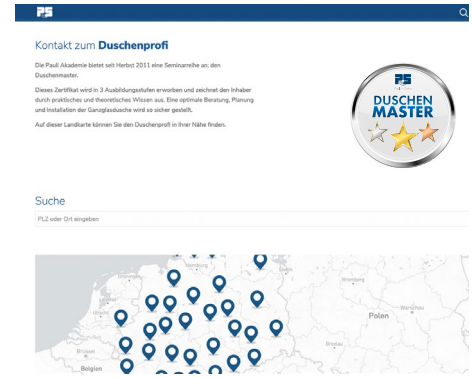

If you are qualified specialist and own the shower master, we are pleased to offer a namely mention on our homepage. Designers and architects are able to find you with the search function via zip-code as specialist for showers.

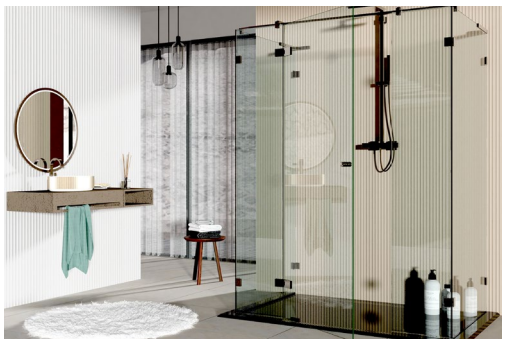



D1 - shower master Level I

training content:
Teaching of systematic basic knowledge with with reference to the various properties and application possibilities.

basic Level I

- Overview and functions of shower door systems and hardware series
- Key points on stability (stiffening) and tightness
- Requirements for assembly and wall fastening
- The right choice of sealing profiles

objectives:
The seminar gives you a comprehensive overview of the P+S products of the different areas and their basic application possibilities.
Conveying systematic basic knowledge for the successful planning and design of showers.

target group:
Consultants, shower planners and installers

requirements:
none

DUSCHEN MASTER LEVEL I

the road to the shower master

MADE IN GERMANY





D2 - shower master Level II

training content:
Conveying consulting and technical skills, as well as planning reliability for every installation situation. Sketching and presenting individual shower solutions and present them.

basics Level II

- Practical applications
- The right choice of fittings for the constructional situation
- Determination of customer requirements, Special solutions and barrier-free shower enclosures
- Requirement of DIN 14428
- Recommendations for necessary written agreements
- What has to be considered in the hotel and contract sector?
- Complaints - learning from mistakes. Experiences analyze, process, solve.
- Workshop cutting of sealing profiles

objectives:
The seminar provides you with sound information on planning and design safety in the application of of Pauli products. It shows practical applications in different areas. A confident handling of customer requirements and complaints is taught.

target group:
Consultants, shower planners and installers

requirements:
shower master level I





D3 - shower master Level III

training content:
The aim is to deepen the technical skills and craftsmanship. The focus is on the structural situation and to take it into account in the dimensions and to complete the work with a professional assembly.

basics Level III

- Simulation of a consultation
- Shower enclosures according to the structural situation and customer requirements
- Calculation and preparation of glass order drawings
- Workshop shower installation
- knowledge check
- Factory tour (only at seminar in Waldbröl)

objectives:
The seminar concludes the shower master seminar series with a well-founded practical practical part. It increases the professional competence in planning, installation and distribution of shower enclosures. Besides a knowledge check there is additionally a factory tour (for seminars in Waldbröl)

certificate:
You will be awarded the title "Shower Master", certificate and can be listed as a partner on our Website as a partner.

target group:
Consultants, shower planners and installers

requirements:
Shower Master Level I and Level II

MIX
Paper | Supporting responsible forestry
FSC® C128922
www.fsc.org

Carbon neutral
Print product
ClimatePartner.com/11798-2302-1013

Pauli + Sohn

sales: Eisenstraße 2, D-51545 Waldbröl
phone: +49 (0) 22 91/92 06-0
fax: +49 (0) 22 91/92 06-681

production: Industriestraße 20, D-51597 Morsbach
phone: +49 (0) 22 94/98 03-0
fax: +49 (0) 22 94/98 03-881

www.pauli.de
pauli@pauli.de

Pauli + Sohn GmbH
all images, technical drawings and descriptions are copyrighted property of the Pauli + Sohn GmbH technical measurements within the catalog are not binding; subject to change. Any liability for printing errors which have occured during the preparatin of this brochure is excluded.

www.pauli.de **stand:** July 2026

Pauli International

Member of Pauli + Sohn GmbH group

Pauli International
Eisenstraße 2
D-51545 Waldbröl
Telefon: +49 (0) 22 91–92 06–0
Fax: +49 (0) 22 91–92 06–681

www.pauli.de/en
info@pauli.de

art-no. P10-09-16 stand June 2026