

2023

Pauli International
Member of Pauli + Sohn GmbH group

world of showers

complete hardware range

Pauli + Sohn GmbH
All images, technical drawings and descriptions are copyrighted property of the Pauli + Sohn GmbH technical measurements within the catalog are not binding; subject to change. Any liability for printing errors which have occured during the preparatin of this brochure is excluded.

www.pauli.de **stand:** March 2023

Pauli + Sohn

world of showers

complete hardware range



shower fixtures from Pauli + Sohn manufactured in Germany





Pauli + Sohn, based in the region of Oberberg, specializes in the development and production of hardware for glass constructions. As a family business in the second generation, constant development and consistent customer orientation is our highest goal.

The materials and the special processing make our shower fixtures a long lasting and sustainable product. Concurrently, Pauli + Sohn attaches great importance to innovation and modern production technologies. Only high-quality materials are used, which are processed in detail and exclusively assembled by hand.

Pauli + Sohn also takes sustainability seriously: residual raw materials are recycled, and water required for production is recycled in an in-house filter system.



- highest demands on quality
- latest production technologies
- innovative development department
- solutions for every requirement
- sustainable corporate philosophy



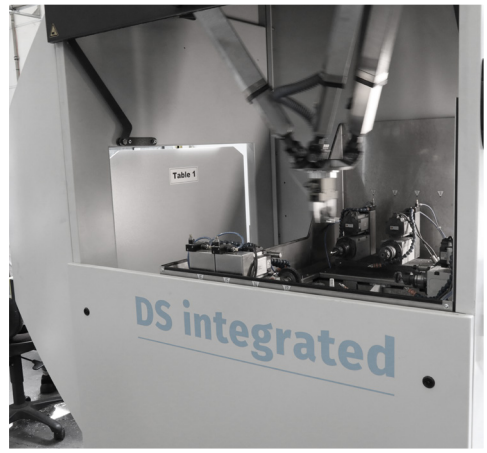

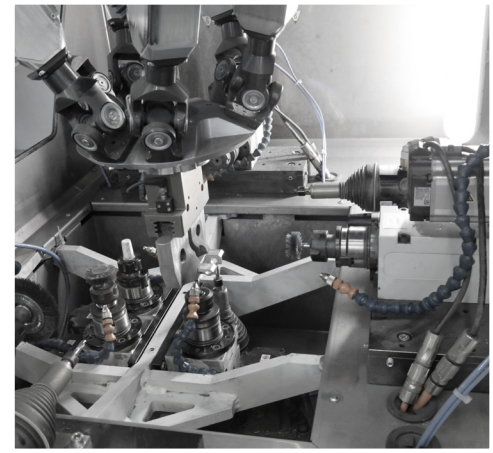

content

general information

introduction . . . 4
new products in overview . . . 8
our product portfolio in comparison . . . 12
assembly instructions . . . 382
training and showrooms . . . 398
shower-configurator . . . 406
colors and finishing . . . 407

installation situations

niche showers . . . 16
corner showers . . . 18
pentagonal and round showers . . . 22
u-showers . . . 24
bath tube solutions . . . 26

swing door hinges

PONTERE . . . 33
PONTERE angle brackets . . . 48
PAVONE flush with lifting function . . . 55
PAVONE angle brackets . . . 66
FLAMEA^{+} . . . 71
FLAMEA^{+} angle brackets . . . 84
FLAMEA^{+} sauna hinges . . . 91
FLAMEA . . . 101
FARDELLO . . . 109
FARDELLO sauna hinges . . . 123

striker door hinges

FLINTER . . . 131
NIVELLO^{+} flush with lifting function . . . 144
NIVELLO^{+} angle brackets . . . 150
NIVELLO – with counter plate and lifting function . . . 152
FLUTURE – overlapping . . . 163
angle brackets for FLAMEA, FARDELLO, FLINTER, NIVELLO and FLUTURE . . . 168
TURA heavy-duty hinges . . . 175
TURA angle brackets . . . 186
TURA sauna hinges . . . 191
FARFALLA . . . 203
PILLANGO . . . 209
PAPILLON . . . 271
angle brackets for FARFALLA, PILLANGO and PAPILLON . . . 222

sliding door shower system EVERYSPACE

- EVERYSPACE - technical details 226
- EVERYSPACE - installation situations 230
- EVERYSPACE - sets (104/209) 234

stainless steel sliding door shower system

- VIVERE II 253
- VIVERE II installation situations 256
- VIVERE II sets 258
- VIVERE II single components 265

WALK-IN

- WALK-IN over view products 278
- WALK-IN installation situations 280
- WALK-IN system profile 284
- WALK-IN floor to ceiling expansion tube 290
- WALK-IN clamp profile 292
- WALK-IN profiles 294

accessories

- door knobs/ door handles 299
- towel holder 312
- stabilizer-bars 318
- opening limiter/ door stop 344
- sealing profiles 350
- profiles (see category WALK-IN) 294
- glass door locks/ floor mount 370
- glass 372
- miscellaneous 376

EVERYSPACE COMFORT

on page 255

MADE IN GERMANY

NEW



With EVERYSPACE and EVERYSPACE COMFORT, we have taken the sliding door hardware for the modern bathroom even further. Our focus was on design, ease of installation and reliability.

The system is flexible and versatile - simply ideal for creating lasting value in the commercial and private sectors.

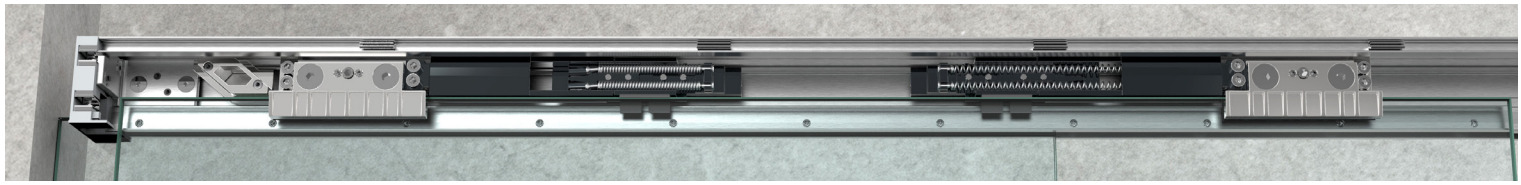

- guide rail can be attached directly to the side panel, without connection to the wall
- side panel attached to the guide rail without complex silicone sealing
- one- or two-sided damping unit (incl. retractable function)
- guide rail mounting without glass drilling
- easy height adjustment (± 3 mm)
- with glass thickness control (patent pending)
- door panel easy to install
- floor guide can be separated for easy installation and cleaning
- depending on the position of the shower head, the overlapping glasselements (40 mm) no sealing profile is necessary
- adhesive handles with optimized adhesive force, therefore no glass processing is necessary (other handles are available on request)
- optimized space-saving solutions for small bathrooms

new surfaces



ZN135
deep black matt

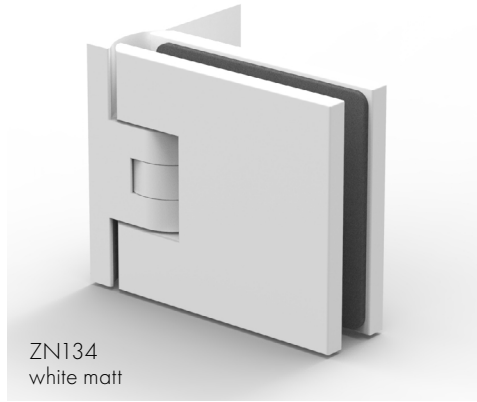

ZN134
white matt

NEW

MADE
IN
GERMANY

new shower shelf

on page 338



8209ZN5

new handles and knobs

on page 299



8698ZN5



8697ZN5

new towel holders

on page 312







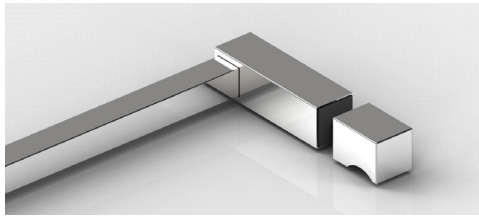

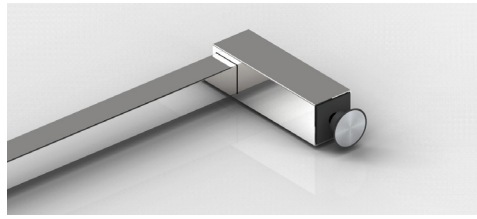

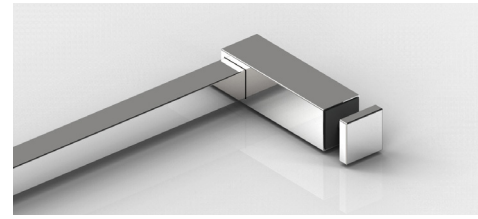

stabilizer-bars made in Germany

on page 318

NEW MADE IN GERMANY

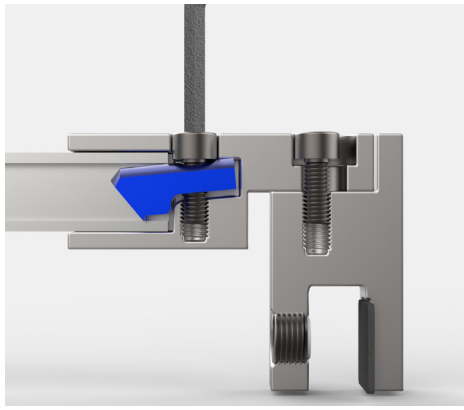

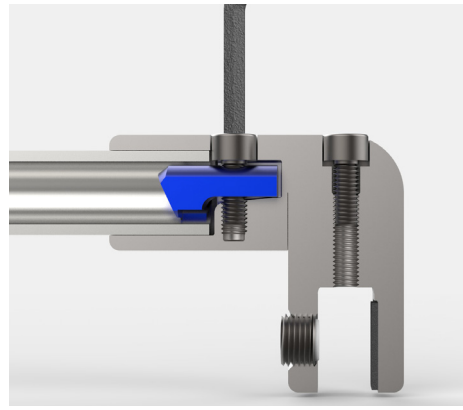

Pauli + Sohn has redesigned the shortenable stabilizer-bars from scratch. The round and angular systems offer more stability thanks to the new clamping technology and are easier to install.

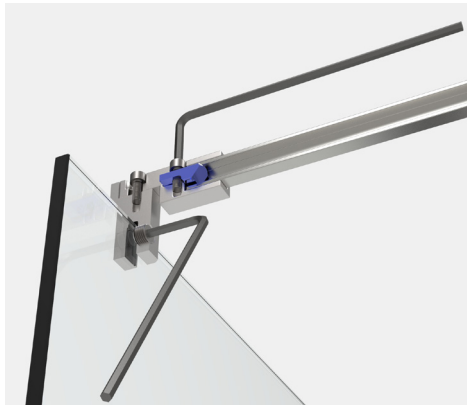

new clamp technique

The internal clamp is pressed against the tube by means of an hexagon socket screw

simplified assembly

All screws on the individual supports, as well as on the complete bars can be fastened with one hex key.



stabilizer-bars made in Germany

on page 318



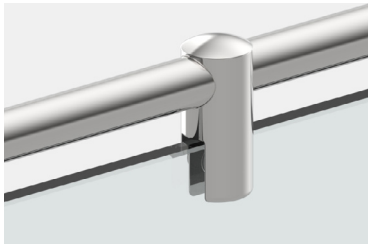



8744ZN5-GL – see page 330





8744ZN5-GTL – see page 330





8794ZN5-GF – see page 323

shower hinges and -systems comparison

■ MADE
■ IN
■ GERMANY

	 PONTERE page 33	 PAVONE page 55	 FLAMEA+ page 71	 FLAMEA+ SN page 91	 FLAMEA page 101	 FARDELLO page 109	 FARDELLO SN page 123	 FLINTER page 131
base material	ZAMAK®	ZAMAK®	ZAMAK®	ZAMAK®	ZAMAK®	ZAMAK®	ZAMAK®	ZAMAK®
load capicity of two hinges	50 kg *2	36 kg *4	45 kg *3	30-36 kg	36 kg	42 kg	30-32 kg	36 kg
maximum door width	1000 mm	900 mm	1000 mm	750-900 mm	900 mm	1000 mm	750-900 mm	900 mm
lifting function		✓						
swing door	✓	✓	✓	✓	✓	✓	✓	
striker door								✓
overlapping door								
sliding door								
suitable for sauna applications				✓			✓	
seal without notching								✓
installation without seal possible	✓	✓	✓	✓	✓	✓	✓	
adjustable closed position	✓	✓	✓	✓	✓	✓	✓	
self-closing during the final cm	✓	✓	✓	✓	✓	✓	✓	✓
concealed wall mount	✓ *1	✓	✓	✓	✓	✓	✓	✓
concealed screws		✓	✓	✓		✓	✓	✓
flush screws		✓						
wall mount with oblong holes	✓ *1	✓	✓	✓	✓	✓	✓	✓
adjustable angle bracket	✓		✓		✓	✓		✓
shower sets with curved glass doors possible								✓

*7= with a door height of 2000 mm and 8 mm glass

*1 = except 8408MS
*2 = except 8404MS (35kg when using 2 hinges)

*3 = except 8133ZN (40kg when using 2 hinges/ max. door width: 900 mm)
*4 = except 8393ZN-L/R (30 kg when using 2 hinges/ max. door width: 750 mm)

 NIVELLO+ page 144	 NIVELLO page 152	 FLUTURE page 163	 TURA page 175	 TURA SN page 191	 FARFALLA page 203	 PILLANGO page 209	 PAPILLON page 217	 VIVERE page 253	 EVERYSPACE page 225
ZAMAK®	ZAMAK®	ZAMAK®	ZAMAK®	ZAMAK®	ZAMAK®	ZAMAK®	ZAMAK®	stainless steel	ZAMAK®
36 kg	36 kg	36 kg	70 kg	50 kg	40 kg	40 kg	40 kg	40 kg	32/60 kg
900 mm	900 mm	900 mm	1200 mm	1200 mm	1000 mm	1000 mm	1000 mm	1000 mm	1000 mm
✓	✓								
✓	✓	✓	✓	✓	✓	✓	✓		
		✓							
								✓	✓
				✓					
✓	✓		✓	✓	✓	✓	✓		
		✓ *5							✓
✓	✓	✓	✓			✓			
✓	✓	✓	✓	✓		✓	✓		✓
✓	✓		✓	✓	✓	✓	✓		✓
✓	✓		✓	✓	✓		✓		✓
✓								✓ *6	
✓	✓		✓	✓	✓	✓	✓	✓	
	✓	✓							✓
✓	✓	✓	✓	✓	✓	✓	✓	✓	

*5 = with stopper
*6 = only wall mount

the durability of the hardware was tested in our factory according to DIN EN 14428:2015/A1:2018 5.5 and TR24.



overview installation situation

Large or small, niche or round shower - many factors come into play when making the right choice. Not only do the wishes of the customers have to be taken into account, but also the construction situation of the bathroom. On the following pages, we will show you the possibilities with our systems, PONTERE, FLAMEA^{+}, FLAMEA, FARFALLA, PILLANGO, PAPILLON, FLINTER and FLUTURE. You can also find set combinations at www.duschplaner.de.



General notes

Our installation examples serve for orientation and planning and are not to be understood as complete sets. You can design each type individually and customized to your specifications.

When planning and selecting the installation situations, please note the structural requirements and assess the premises precisely. Depending on the application example, the number and arrangement of the stabilizing bars and doorstops may vary.
For detailed information please refer to our measurement sheets on the Internet. Our technical team would be glad to assist you.

Important:

1. shower enclosures must be installed securely and stable.
2. the stabilization depends on the structural situation and the division of the shower enclosure.
3. side panels on which doors are mounted must generally be stabilized.

standard shower sizes:

our situations fit all common standard sizes –
e.g. 900 x 900 x 2000 cm

installation situations legend

(A)	opening outwards
(P)	swing door
(F)	folding system
(LA)	hardware mounted on the left, opening outwards
(RA)	hinge mounted on the right, opening outwards
	combination FLAMEA^{+} / FLINTER
	combination PONTERE / FARFALLA
	combination FLAMEA / FLINTER
	combination FARDELLO / FLINTER

type: niche showers





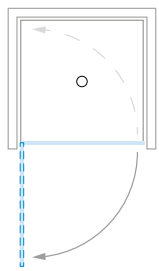
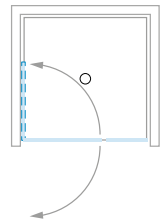
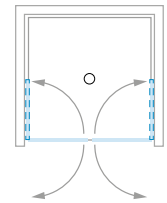
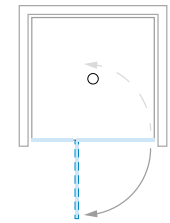

PONTERE	101 (P)	102 (P)	103 (P)	104 (P)
PAVONE	101 (P)	102 (P)	103 (P)	104 (P)
FLAMEA+	101 (P)	102 (P)	103 (P)	104 (P)
FLAMEA	101 (P)	102 (P)	103 (P)	104 (P)
FARDELLO	101 (P)	102 (P)	103 (P)	104 (P)
FLINTER	101 (A)	–	–	104 (A)
NIVELLO+	101 (LA) 101 (RA)	–	–	104 (LA) 104 (RA)
NIVELLO	101 (LA) 101 (RA)	–	–	104 (LA) 104 (RA)
FLUTURE	–	–	–	104 (A)
TURA	101 (A)	–	–	104 (A)
FARFALLA	101 (A)	–	–	104 (A)
PILLANGO	101 (A)	–	–	104 (A)
PAPILLON	101 (A)	–	–	104 (A)

(A) = opening outward – (P) = swing door - (FP) = swing folding-system in combination – (F) = folding-system

type: niche showers







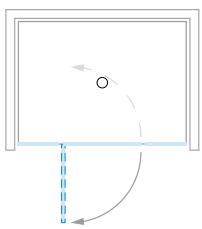
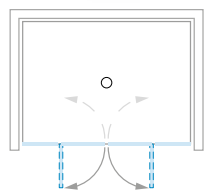
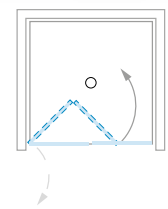
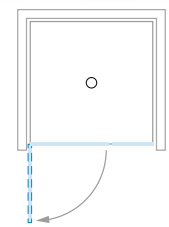
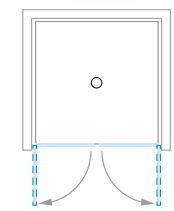

105 (P)	106 (P)	107 (FP)	102 (P)	103 (P)
105 (P)	106 (P)	-	102 (P)	103 (P)
105 (P)	106 (P)	107 (FP)	102 (P)	103 (P)
105 (P)	106 (P)	107 (FP)	102 (P)	103 (P)
105 (P)	106 (P)	107 (FP)	102 (P)	103 (P)
105 (A)	106 (A)	-	108 (A)	109 (A)
105 (LA) 105 (RA)	106 (A)	-	108 (LA) 108 (RA)	109 (A)
105 (LA) 105 (RA)	106 (A)	-	108 (LA) 108 (RA)	109 (A)
105 (A)	106 (A)	-	–	–
105 (A)	106 (A)	107 (F)	108 (A)	109 (A)
105 (A)	106 (A)	-	108 (A)	109 (A)
105 (A)	106 (A)	-	108 (A)	109 (A)
105 (A)	–	-	108 (A)	–

Depending on the application example, the number and arrangement of stabilizer-bars, door hinges and angle brackets may vary or be required. For detailed information, please refer to our measurement sheets or ask our technical department. Information on standard dimensions of showers and abbreviations can be found on page 15.

type: corner showers

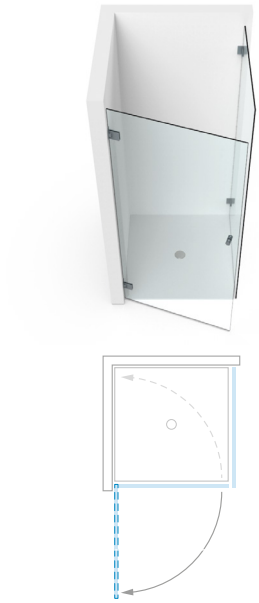







PONTERE	201 (P)	202 (P)	202 (P)	204 (P)
PAVONE	201 (P)	202 (P)	202 (P)	204 (P)
FLAMEA+	201 (P)	202 (P)	202 (P)	204 (P)
FLAMEA	201 (P)	202 (P)	202 (P)	204 (P)
FARDELLO	201 (P)	202 (P)	202 (P)	204 (P)
FLINTER	201 (A)	–	203 (A)	204 (A)
NIVELLO+	201 (LA) 201 (RA)	–	203 (LA) 203 (RA)	204 (LA) 204 (RA)
NIVELLO	201 (LA) 201 (RA)	–	203 (LA) 203 (RA)	204 (LA) 204 (RA)
FLUTURE	–	–	–	204 (A)
TURA	201 (A)	–	203 (A)	204 (A)
FARFALLA	201 (A)	–	203 (A)	204 (A)
PILLANGO	201 (A)	–	203 (A)	204 (A)
PAPILLON	201 (A)	–	203 (A)	204 (A)

(A) = opening outward – (P) = swing door - (FP) = swing folding-system in combination – (F) = folding-system

type: corner showers

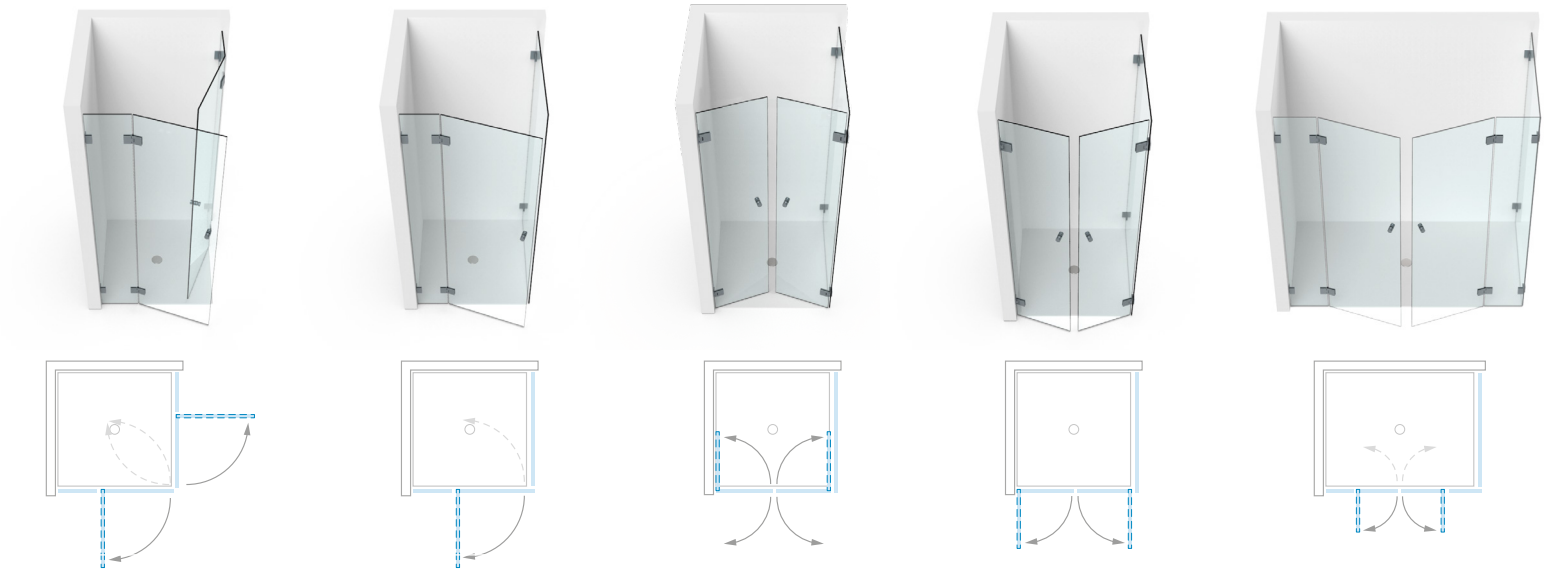

■	209 (P)	210 (P)	211 (P)	211 (P)	213 (P)
■	209 (P)	210 (P)	211 (P)	211 (P)	213 (P)
■	209 (P)	210 (P)	211 (P)	211 (P)	213 (P)
■	209 (P)	210 (P)	–	–	213 (P)
■	209 (P)	210 (P)	211 (P)	211 (P)	213 (P)
■	209 (A)	210 (A)	–	212 (A)	213 (A)
■	209 (A)	210 (LA) 210 (RA)	–	–	213 (LA) 213 (RA)
■	209 (A)	210 (LA) 210 (RA)	–	212 (LA) 212 (RA)	213 (LA) 213 (RA)
■	209 (A)	210 (A)	–	212 (A)	213 (A)
■	209 (A)	210 (A)	–	–	213 (A)
■	209 (A)	210 (A)	–	–	213 (A)
■	209(A)	210 (A)	–	212 (A)	213 (A)
■	–	210 (A)	–	212 (A)	–

Depending on the application example, the number and arrangement of stabilizer-bars, door hinges and angle brackets may vary or be required. For detailed information, please refer to our measurement sheets or ask our technical department. Information on standard dimensions of showers and abbreviations can be found on page 15.

installation situations - corner showers

type: corner showers

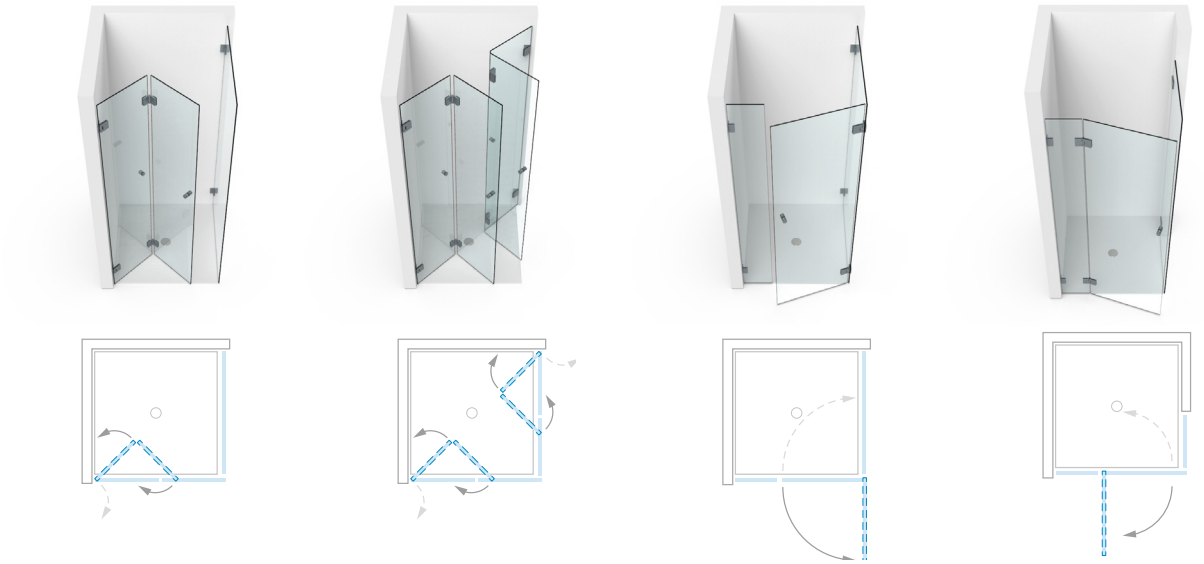

PONTERE	215 (FP)	216 (FP)	217 (P)	218 (P)
PAVONE	-	-	217 (P)	-
FLAMEA+	215 (FP)	216 (FP)	217 (P)	218 (P)
FLAMEA	215 (FP)	216 (FP)	–	218 (P)
FARDELLO	215 (FP)	216 (FP)	217 (P)	218 (P)
FLINTER	–	–	217 (A)	218 (A)
NIVELLO+	–	–		–
NIVELLO	–	–		218 (LA) 218 (RA)
FLUTURE	–	–	–	218 (A)
TURA	215 (F)	216 (F)	–	–
FARFALLA	–	–	–	218 (A)
PILLANGO	–	–	217 (A)	218 (A)
PAPILLON	–	–	–	–

(A) = opening outward – (P) = swing door - (FP) = swing folding-system in combination – (F) = folding-system

type: corner showers

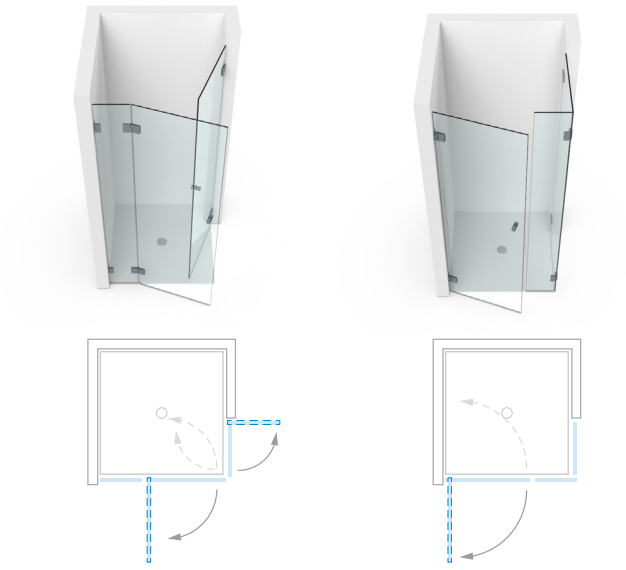

	219 (P)	221 (P)
	–	–
	219 (P)	221 (P)
	–	221 (P)
	–	221 (P)
	–	221 (A)
	–	–
	–	221 (LA) 221 (RA)
	–	–
	–	–
	–	221 (A)
	–	221 (A)
	–	221 (A)



Depending on the application example, the number and arrangement of stabilizer-bars, door hinges and angle brackets may vary or be required. For detailed information, please refer to our measurement sheets or ask our technical department. Information on standard dimensions of showers and abbreviations can be found on page 15.

type: pentagonal showers

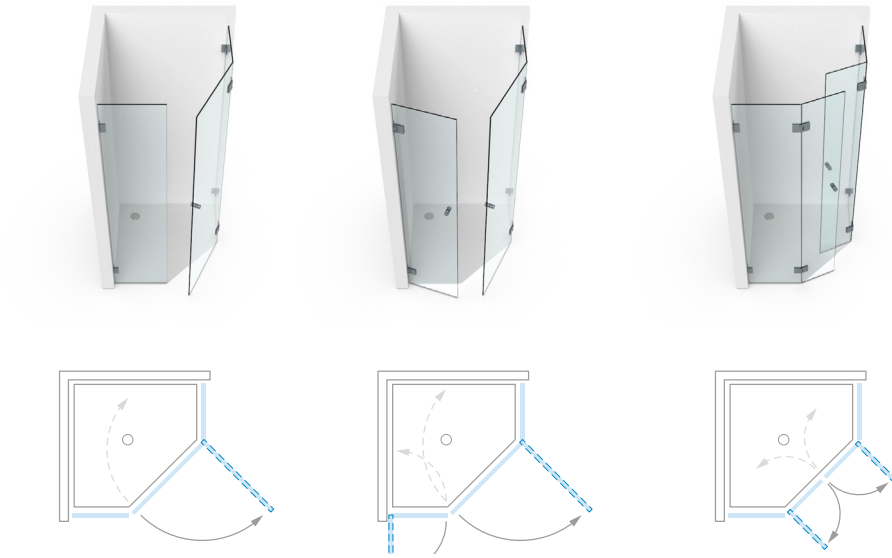

PONTERE	301 (P)	302 (P)	303 (P)
PAVONE	–	–	–
FLAMEA+	301 (P)	302 (P)	303 (P)
FLAMEA	–	–	–
FARDELLO	–	–	–
FLINTER	301 (A)	–	303 (A)
NIVELLO+	301 (LA) 301 (RA)	–	303 (A)
NIVELLO	301 (LA) 301 (RA)	–	303 (A)
FLUTURE	–	–	–
TURA	–	–	–
FARFALLA	301 (A)	–	303 (A)
PILLANGO	301 (A)	–	303 (A)
PAPILLON	301 (A)	–	303 (A)

(A) = opening outward – (P) = swing door - (FP) = swing folding-system in combination – (F) = folding-system

type: round showers

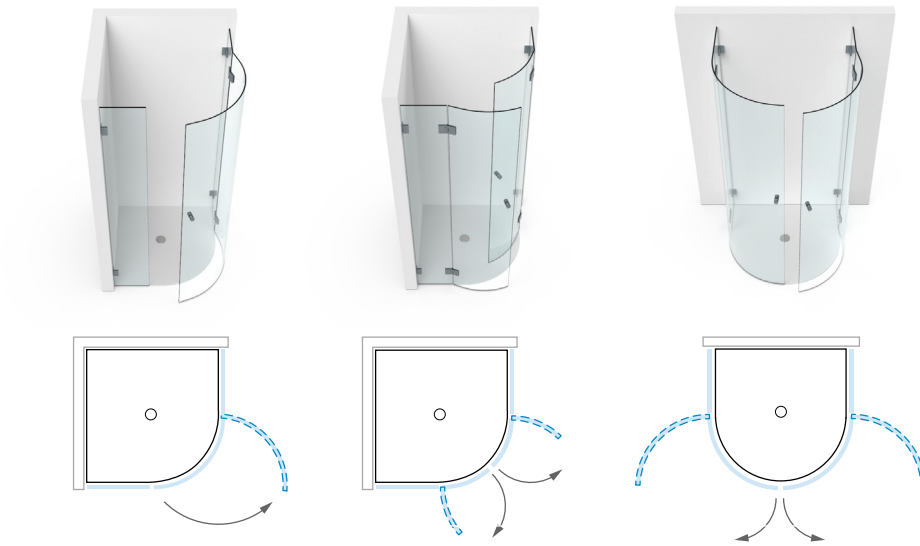

PONTERE	–	–	–
PAVONE	–	–	–
FLAMEA+	–	–	–
FLAMEA	–	–	–
FARDELLO	–	–	–
FLINTER	–	502 (A)	–
NIVELLO+	–	–	–
NIVELLO	–	502 (A)	–
FLUTURE	–	502 (A)	–
TURA	501 (A)	502 (A)	503 (A)
FARFALLA	501 (A)	502 (A)	503 (A)
PILLANGO	501 (A)	502 (A)	503 (A)
PAPILLON	501 (A)	–	–

Depending on the application example, the number and arrangement of stabilizer-bars, door hinges and angle brackets may vary or be required. For detailed information, please refer to our measurement sheets or ask our technical department. Information on standard dimensions of showers and abbreviations can be found on page 15.

type: u-showers

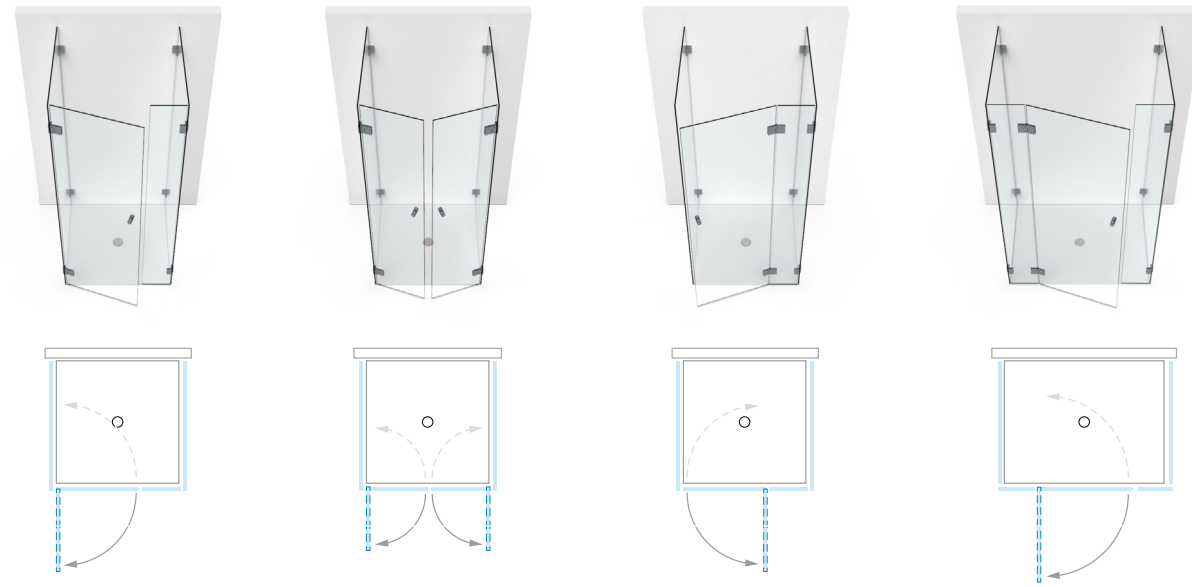

PONTERE	401 (P)	402 (P)	403 (P)	404 (P)
PAVONE	401 (P)	402 (P)	403 (P)	404 (P)
FLAMEA+	401 (P)	402 (P)	403 (P)	404 (P)
FLAMEA	-	-	403 (P)	404 (P)
FARDELLO	401 (P)	402 (P)	403 (P)	404 (P)
FLINTER	401 (A)	402 (A)	403 (A)	404 (A)
NIVELLO+	–	–	403 (LA) 403 (RA)	404 (LA) 404 (RA)
NIVELLO	–	–	403 (LA) 403 (RA)	404 (LA) 404 (RA)
FLUTURE	–	–	403 (A)	404 (A)
TURA	–	–	403 (A)	404 (A)
FARFALLA	–	–	403 (A)	404 (A)
PILLANGO	401 (A)	402 (A)	403 (A)	404 (A)
PAPILLON	–	–	403 (A)	404 (A)

(A) = opening outward – (P) = swing door - (FP) = swing folding-system in combination – (F) = folding-system

type: u-showers



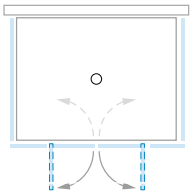

	406 (P)
	406 (P)
	406 (P)
	406 (P)
	406 (P)
	406 (A)
	406 (A)
	406 (A)
	406 (A)
	406 (A)
	406 (A)
	406 (A)
	406 (A)



Depending on the application example, the number and arrangement of stabilizer-bars, door hinges and angle brackets may vary or be required. For detailed information, please refer to our measurement sheets or ask our technical department. Information on standard dimensions of showers and abbreviations can be found on page 15.

type: bath tub solutions

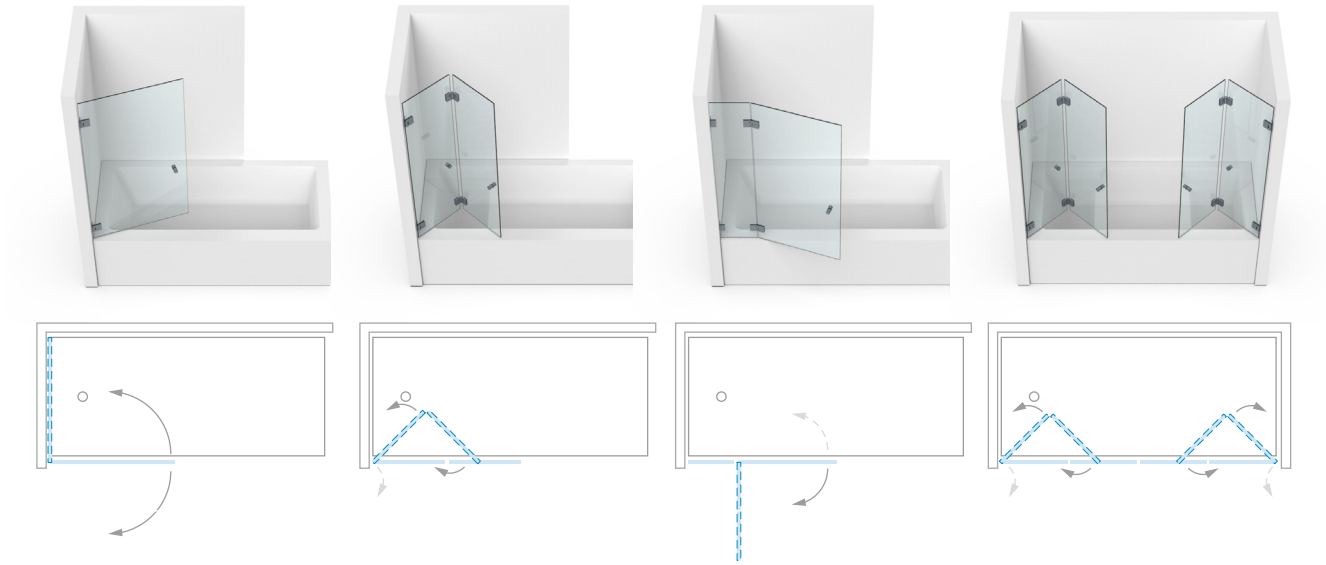

PONTERE	601 (P)	602 (FP)	603 (P)	604 (FP)
PAVONE	601 (P)	–	603 (P)	–
FLAMEA+	601 (P)	602 (FP)	603 (P)	603 (FP)
FLAMEA	601 (P)	602 (FP)	603 (P)	604 (FP)
FARDELLO	601 (P)	602 (FP)	603 (P)	604 (FP)
FLINTER	–	–	603 (A)	–
NIVELLO+	–	–	603 (LA) 603 (RA)	–
NIVELLO	–	–	603 (LA) 603 (RA)	–
FLUTURE	–	–	603 (A)	–
TURA	–	602 (F)	603 (A)	604 (F)
FARFALLA	–	–	603 (A)	–
PILLANGO	–	–	603 (A)	–
PAPILLON	–	–	–	–

(A) = opening outward – (P) = swing door - (FP) = swing folding-system in combination – (F) = folding-system

type: bath tub solutions

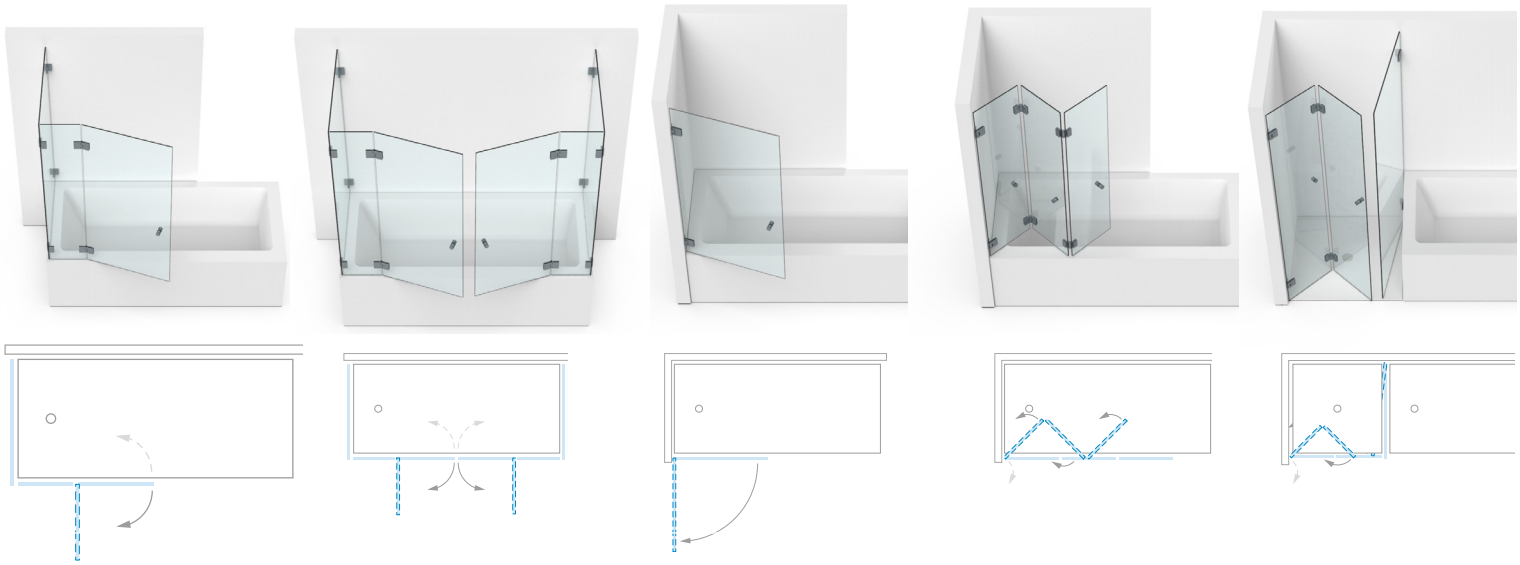

605 (P)	606 (P)	601 (P)	608 (FP)	609 (FP)
605 (P)	606 (P)	601 (P)	–	–
605 (P)	606 (P)	601 (P)	608 (FP)	609 (FP)
605 (P)	606 (P)	601 (P)	608 (FP)	609 (FP)
605 (P)	606 (P)	601 (P)	608 (FP)	609 (FP)
605 (A)	606 (A)	607 (A)	–	–
605 (LA) 605 (RA)	606 (A)	607 (LA) 607 (RA)	–	–
605 (LA) 605 (RA)	606 (A)	607 (LA) 607 (RA)	–	–
–	606 (A)	–	–	–
605 (A)	606 (A)	607 (A)	608 (F)	609 (F)
605 (A)	606 (A)	607 (A)	–	–
–	606 (A)	607 (A)	–	–
–	–	–	–	–

Depending on the application example, the number and arrangement of stabilizer-bars, door hinges and angle brackets may vary or be required. For detailed information, please refer to our measurement sheets or ask our technical department. Information on standard dimensions of showers and abbreviations can be found on page 15.

type: bath tub solutions



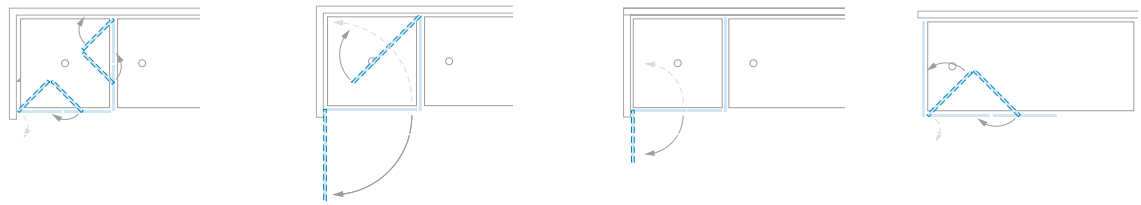

PONTERE	610 (FP)	611 (P)	612 (P)	613 (FP)
PAVONE	–	611 (P)	612 (P)	–
FLAMEA^{+}	610 (FP)	611 (P)	612 (P)	613 (FP)
FLAMEA	610 (FP)	611 (P)	612 (P)	613 (FP)
FARDELLO	610 (FP)	611 (P)	612 (P)	613 (FP)
FLINTER	–	611 (A)	612 (A)	–
NIVELLO^{+}	–	–	612 (LA) 612 (RA)	–
NIVELLO	–	611 (LA) 611 (RA)	612 (LA) 612 (RA)	–
FLUTURE	–	–	–	–
TURA	610 (F)	611 (A)	612 (A)	613 (F)
FARFALLA	–	611 (A)	612 (A)	–
PILLANGO	–	–	612 (A)	–
PAPILLON	–	–	612 (A)	–

(A) = opening outward – (P) = swing door - (FP) = swing folding-system in combination – (F) = folding-system

type: bath tub solutions





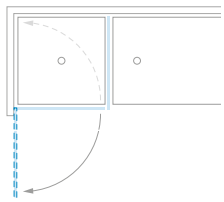
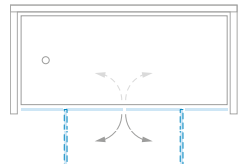
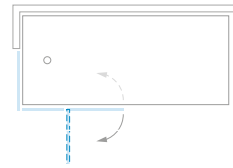

■	615 (P)	616 (P)	617 (P)
■	615 (P)	616 (P)	–
■	615 (P)	616 (P)	617 (P)
■	615 (P)	616 (P)	617 (P)
■	615 (P)	616 (P)	617 (P)
■	615 (A)	616 (A)	617 (A)
■	615 (LA) 615 (RA)	616 (A)	–
■	615 (LA) 615 (RA)	616 (A)	617 (LA) 617 (RA)
■	–	616 (A)	617 (A)
■	615 (A)	616 (A)	–
■	615 (A)	616 (A)	617 (A)
■	615 (A)	616 (A)	617 (A)
■	615 (A)	–	–

Depending on the application example, the number and arrangement of stabilizer-bars, door hinges and angle brackets may vary or be required. For detailed information, please refer to our measurement sheets or ask our technical department. Information on standard dimensions of showers and abbreviations can be found on page 15.

stabilization and doorstops

Sustainability is important to us. Therefore we place great emphasis on safety, intelligent technology and good quality of the material.
To stabilize your shower and to protect it from improper use, such as over-opened doors, there are various sensible possibilities. Your shower expert will be happy to assist you.

with stabilizer angle bracket





8439ZN_L/R-180/8439ZN_L/R-280/8438ZN5 -150/8438ZN5 -250
see page 340

with railing





8744ZN_/8794ZN_
see page 318

with stabilizer-bars





8474MS_
see page 334

door-stops



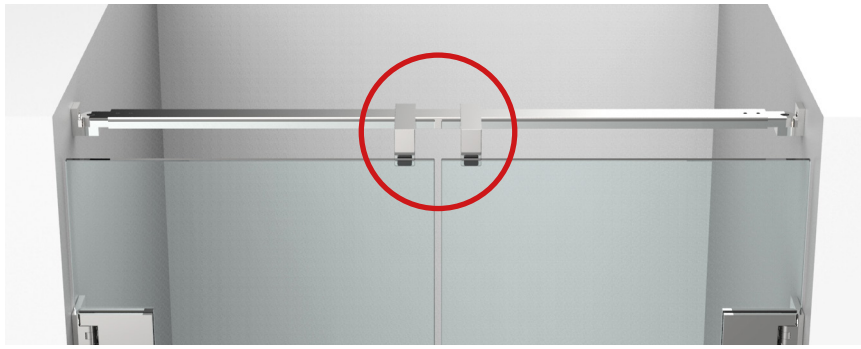

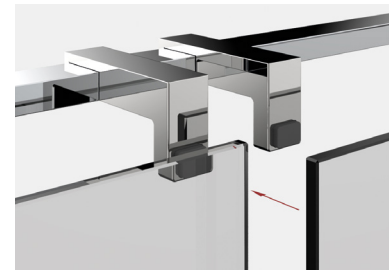

8491MS7
see page 337



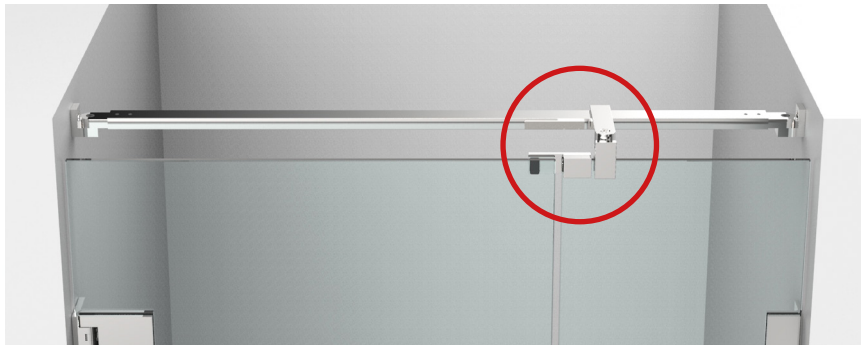

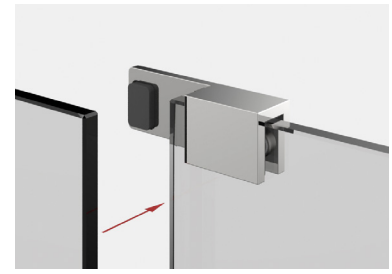

8490MS7-R/L
see page 344



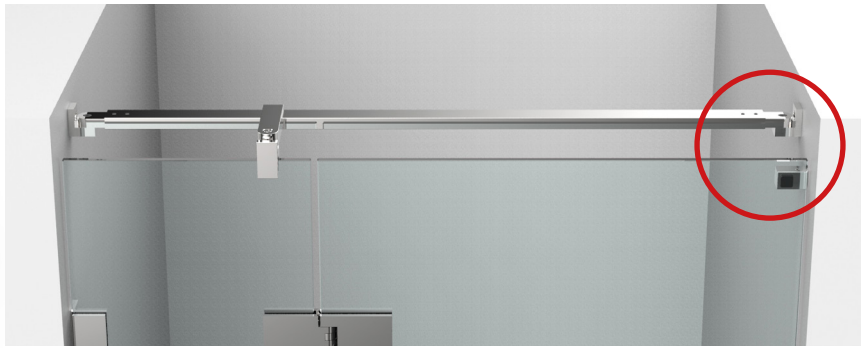

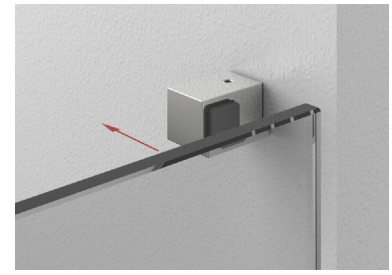

8274ZN_-WR
see page 349





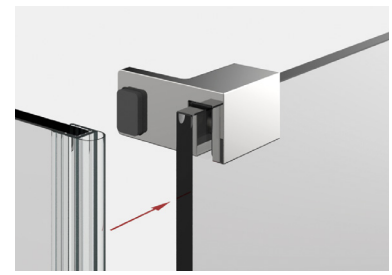

8489MS_-R/L
see page 344



corresponding angle brackets

for PONTERE can be found on page 48.

PS SERVICE

our service for you!

On **www.pauli.de**, you can find many different measurement sheets for all standard installations.

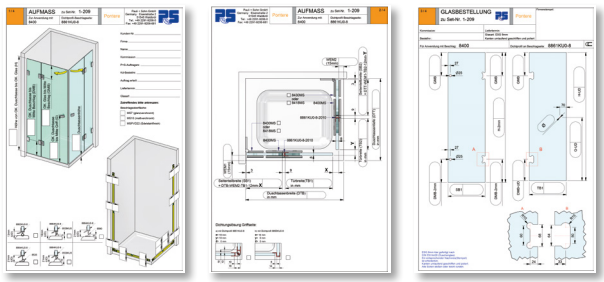

MADE IN GERMANY



shower swing door hinge PONTERE



PONTERE – for special requirements

MADE IN GERMANY

PONTERE is a high quality, aesthetic highlight for individual solutions for high end projects or private homes. niche, corner, pentagonal or U showers: PONTERE is a hinge that takes on any challenge and offers nearly limitless design possibilities. It closes the door in the last centimeters automatically and the closed position can be adjusted infinitely.

- pivoting point centered and therefore useable as a swing door
- self-closing during the last 15 - 20°
- unlimited adjustment of the closed position
- infinite adjustable degree function (except 8418MS)
- quick assembly
- maintenance free in normal use due to high-grade bearing sleeves
- useable with or without sealing profile
- load capacity (two hinges): 50kg (except 8404MS) corresponding to a glass door with the dimension 1000 x 2000 mm and a glass thickness of 10 mm
- the durability of the hardware has been tested internally according to DIN EN 14428:2015 5.5.


8430MS


8421MS


8406MS


8412MS

- adjustable angle when using angle brackets (except 8418MS)
- closed position can be adjusted as often as needed

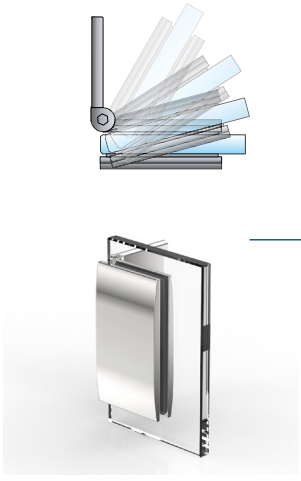
8430MS



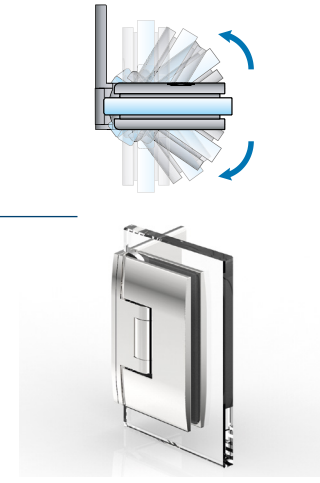
8406MS

Please note that the instruction manual can be found on page 382.

shower swing door hinge - PONTERE



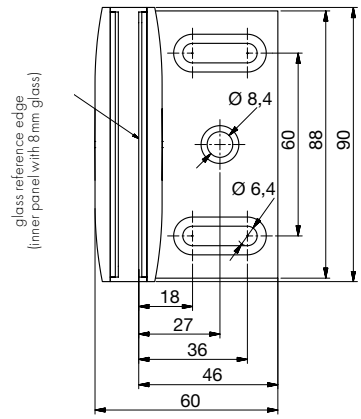

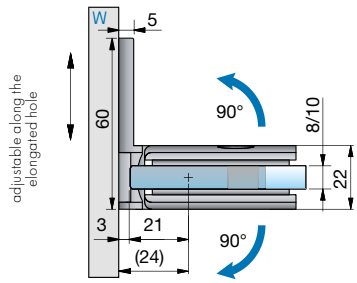

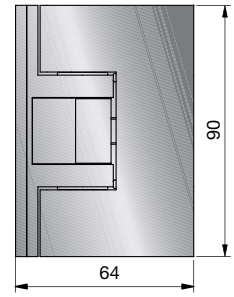

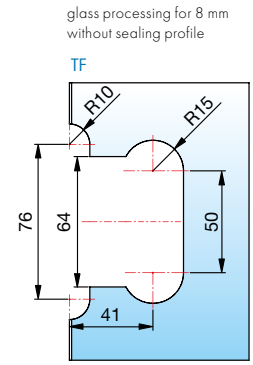



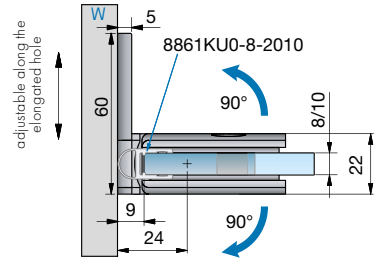

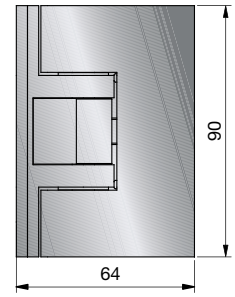

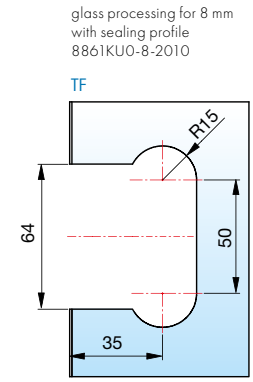

article no.	finish	glass thickness	article description	features	pu/pieces
8406MS7	gloss chrome	8/10 mm	shower swing door hinge PONTERE glass-wall 90°	opens in- and outwards 90°, with adjustable closed position, single sided mounting plate	1/2
8406MS10	matt chrome				
8406MSPVD22	stainless steel optic				

When using the hinges for 10 mm glass thickness, please use the insert set Art. No. HZ-SET9 per hinge free of charge.



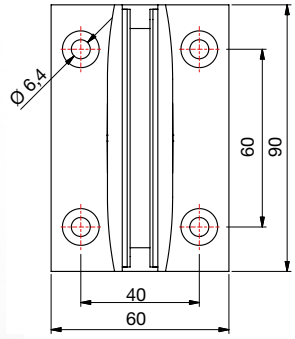

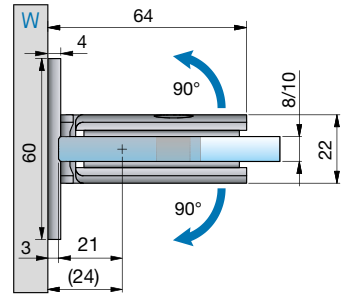

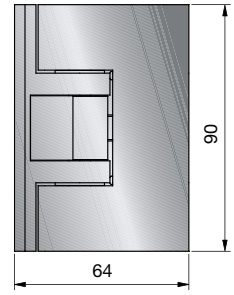

glass processing for 8 mm
without sealing profile

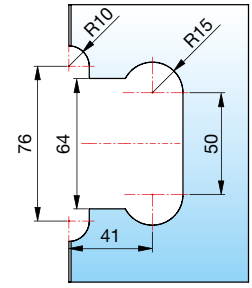



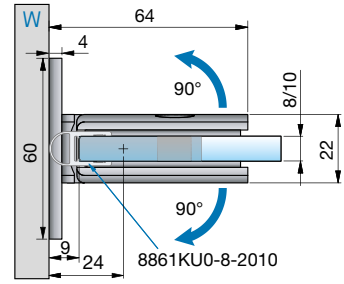

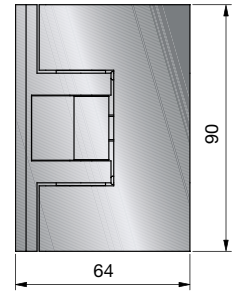

glass processing for 8 mm
with sealing profile
8861KU0-8-2010

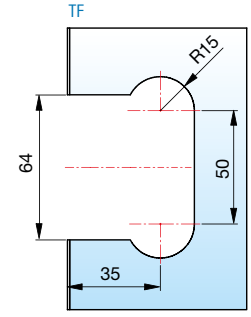

article no.	finish	glass thickness	article description	features	pu/pieces
8408MS7	gloss chrome	8/10 mm	shower swing door hinge PONTERE glass-wall 90°	opens in- and outwards 90°, with adjustable closed position, double sided mounting plate	1/2
8408MS10	matt chrome				
8408MSPVD22	stainless steel optic				

When using the hinges for 10 mm glass thickness, please use the insert set Art. No. HZ-SET9 per hinge free of charge.

ST = side panel I TF = door leaf I W = wall

shower swing door hinge - PONTERE



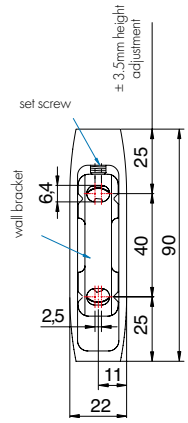

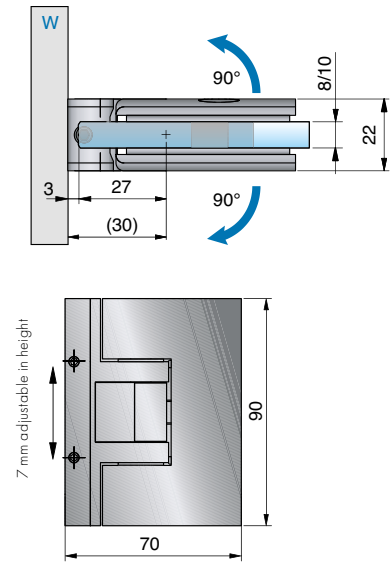

glass processing for 8 mm without sealing profile

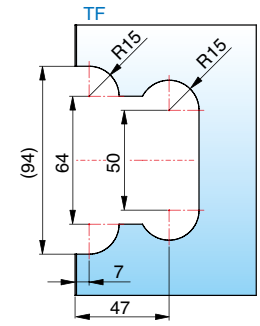



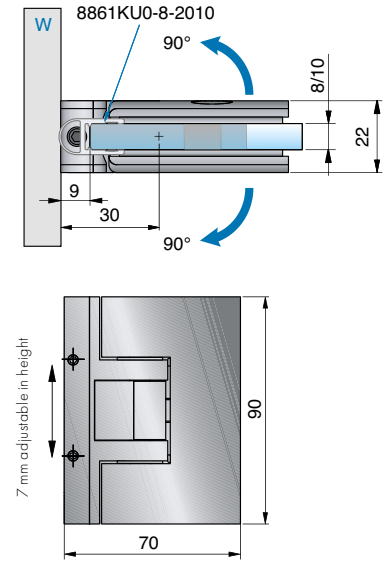

glass processing for 8mm with sealing profile 8861KU0-8-2010

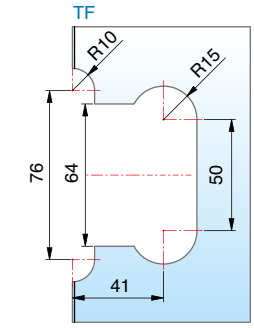

article no.	finish	glass thickness	article description	features	pu/pieces
8404MS7 8404MS10 8404MSPVD22	gloss chrome matt chrome stainless steel optic	8/10 mm	shower swing door hinge PONTERE glass-wall 90°	opens in- and outwards 90°, with adjustable closed position, 7 mm adjustable in height, loading capacity of 2 hinges: 35 kg corresponding to a glass door with the dimension 700 x 2000 mm and a glass thickness of 10 mm	1/2

When using the hinges for 10 mm glass thickness, please use the insert set Art. No. HZ-SET9 per hinge free of charge.



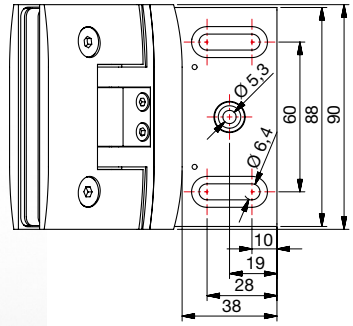

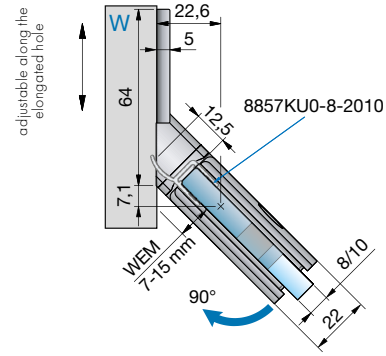

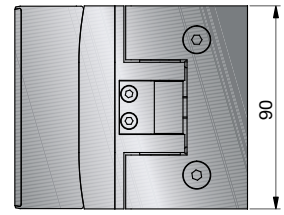

glass processing for 8mm
with sealing profile
8857KU0-8-2010

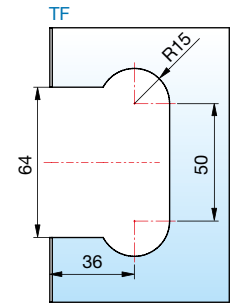



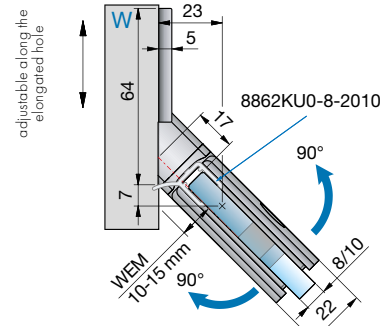

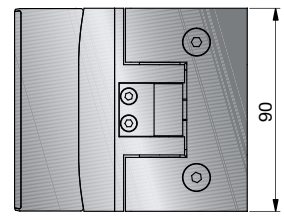

glass processing for 8mm
with sealing profile
8862KU0-8-2010

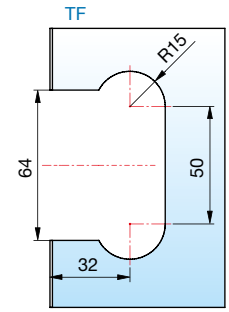

article no.	finish	glass thickness	article description	features	pu/pieces
8414MS7	gloss chrome	8/10 mm	shower swing door hinge PONTERE glass-wall 135°	opens in- and outwards 90° depending on sealing profile, with adjustable closed position, adjustable along the oblong hole	1/2
8414MS10	matt chrome				
8414MSPVD22	stainless steel optic				

When using the hinges for 10 mm glass thickness, please use the insert set Art. No. HZ-SET9 per hinge free of charge.

ST = side panel I TF = door leaf I W = wall

shower swing door hinge - PONTERE



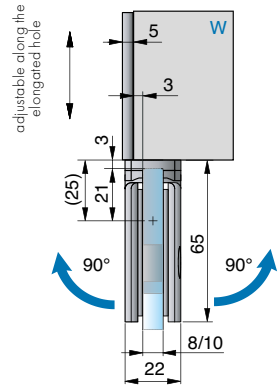

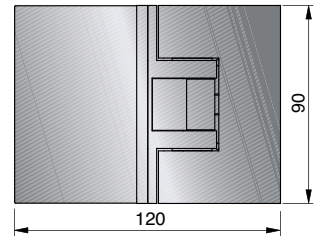

glass processing for 8mm without sealing profile

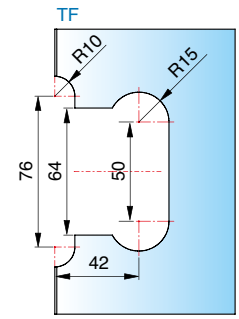

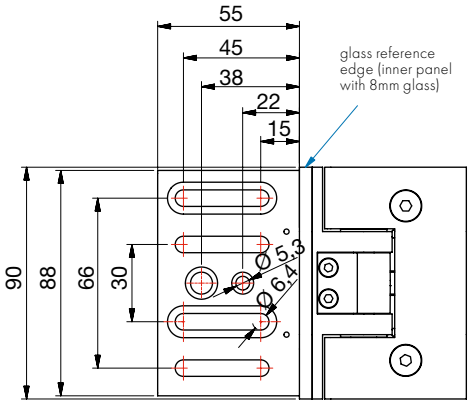

When using the hinges for 10 mm glass thickness, please use the insert set Art. No. HZ-SET9 per hinge free of charge.



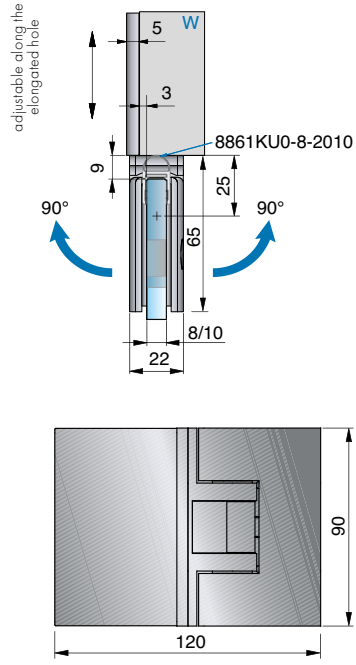

glass processing for 8mm
with sealing profile
8861KU0-8-2010

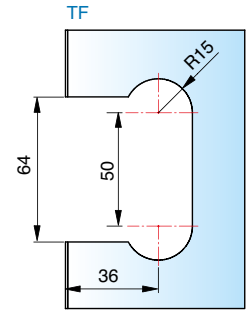



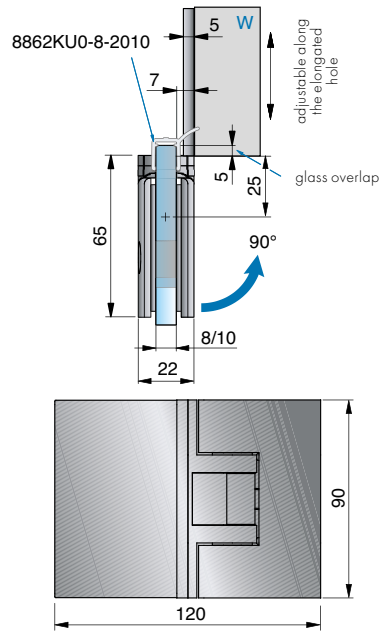

glass processing for 8mm
with sealing profile
8862KU0-8-2010

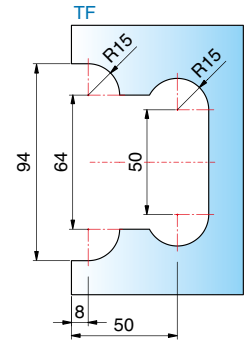

article no.	finish	glass thickness	article description	features	pu/pieces
8412MS7	gloss chrome	8/10 mm	shower swing door hinge PONTERE glass-wall 180°	opens in- and outwards 90° depending on sealing profile, with adjustable closed position, adjustable along the oblong hole	1/2
8412MS10	matt chrome				
8412MSPVD22	stainless steel optic				

ST = side panel I TF = door leaf I W = wall

shower swing door hinge - PONTERE



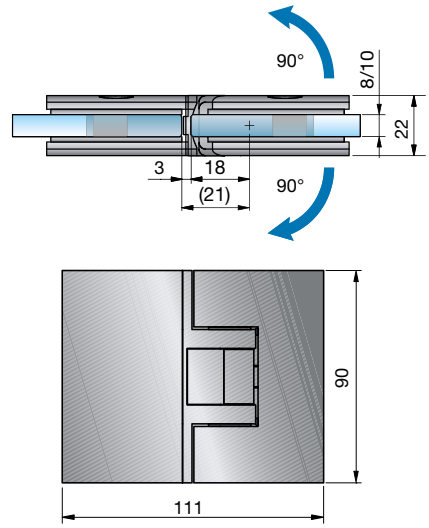

glass processing for 8mm
without sealing profile

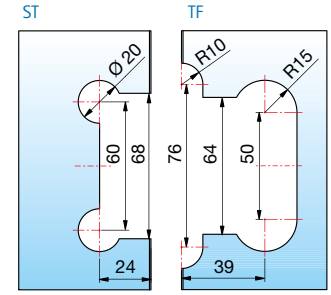

When using the hinges for 10 mm glass thickness, please use the insert set Art. No. HZ-SET7 per hinge free of charge.

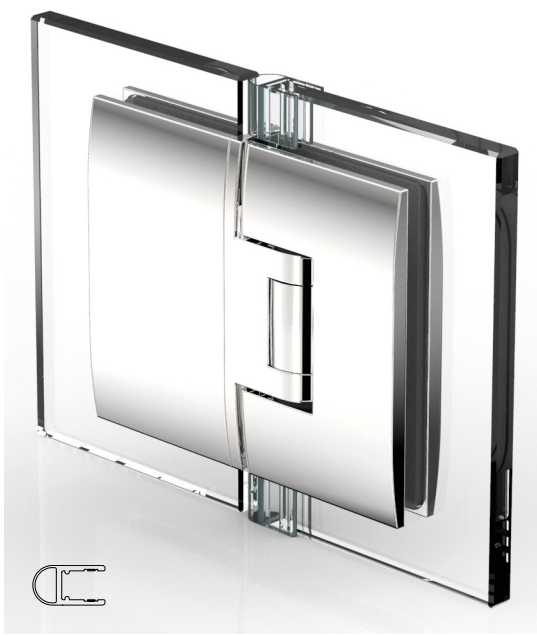

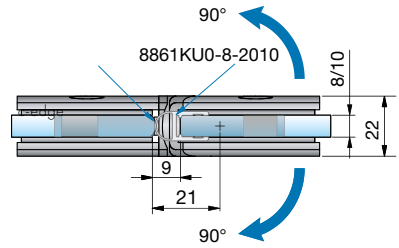

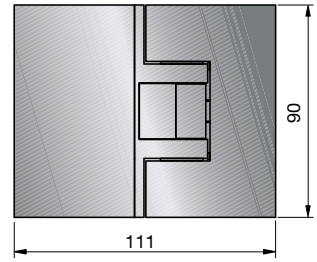

glass processing for 8mm
with sealing profile 8861KU0-8-2010

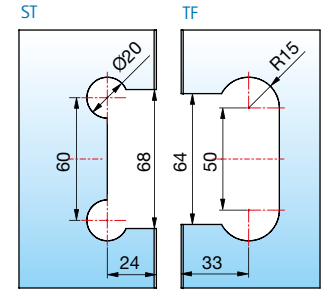



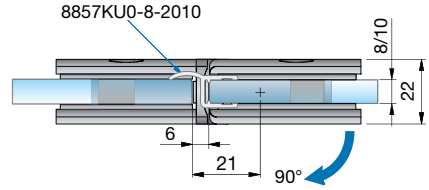

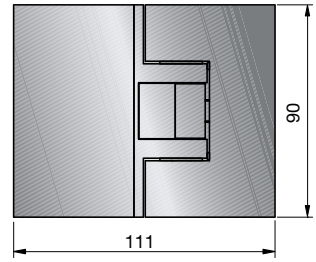

glass processing for 8mm
with sealing profile 8857KU0-8-2010

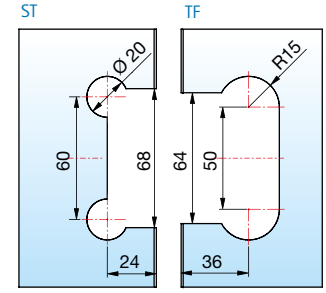

article no.	finish	glass thickness	article description	features	pu/pieces
8400MS7	gloss chrome	8/10 mm	shower swing door hinge PONTERE glass-glass 180°	opens in- and outwards 90° depending on sealing profile, with adjustable closed position	1/2
8400MS10	matt chrome				
8400MSPVD22	stainless steel optic				

ST = side panel I TF = door leaf I W = wall

shower swing door hinge - PONTERE



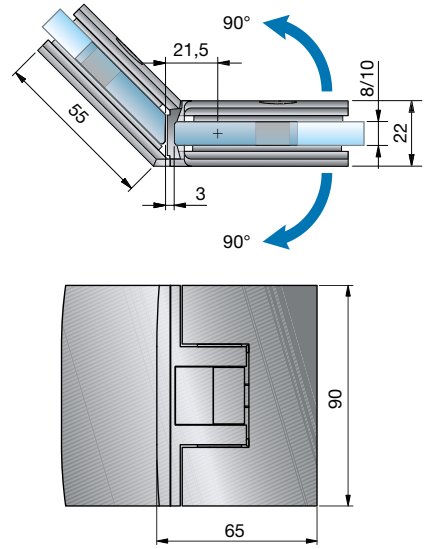

glass processing for 8 mm
without sealing profile

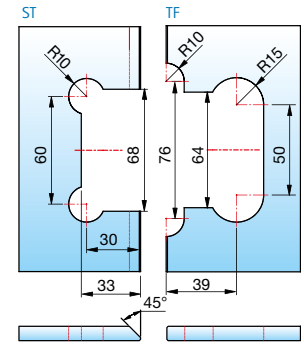

When using the hinges for 10 mm glass thickness, please use the insert set Art. No. HZ-SET8 per hinge free of charge.

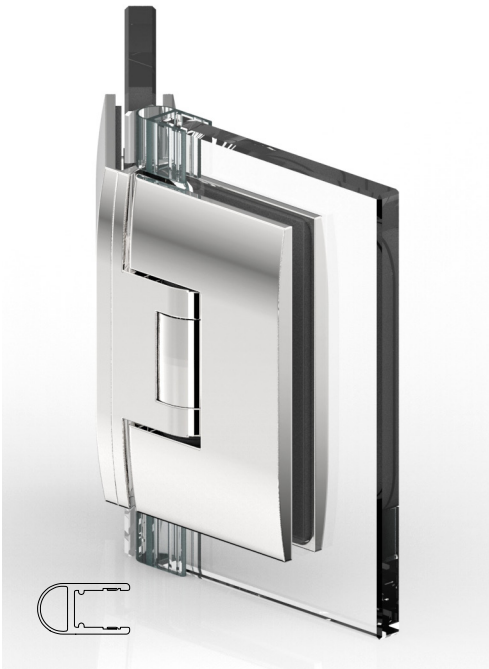

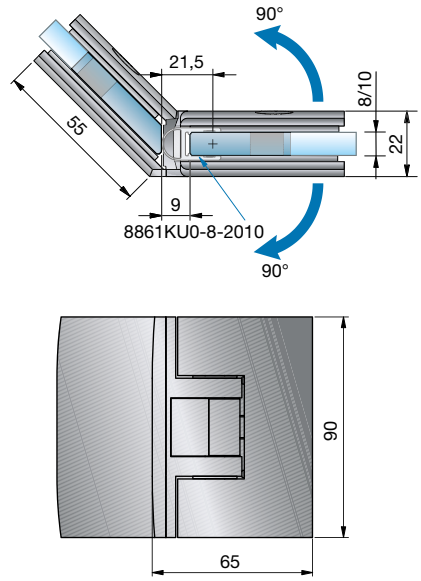

glass processing for 8 mm
with sealing profile 8861KU0-8-2010

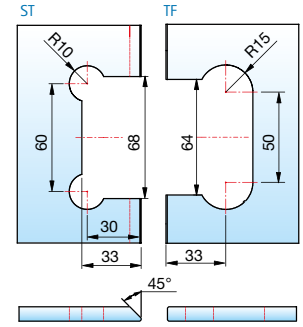



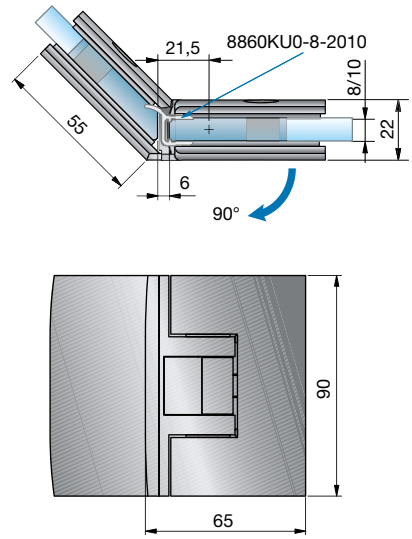

glass processing for 8 mm
with sealing profile 8860KU0-8-2010

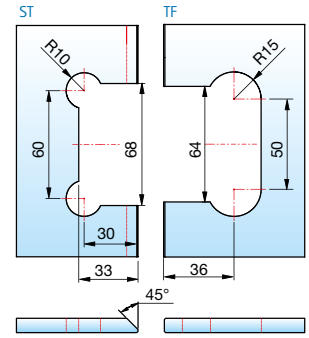

article no.	finish	glass thickness	article description	features	pu/pieces
8402MS7	gloss chrome	8/10 mm	shower swing door hinge PONTERE glass-glass 135°	opens in- and outwards 90° depending on sealing profile, with adjustable closed position	1/2
8402MS10	matt chrome				
8402MSPVD22	stainless steel optic				

ST = side panel I TF = door leaf I W = wall

shower swing door hinge - PONTERE

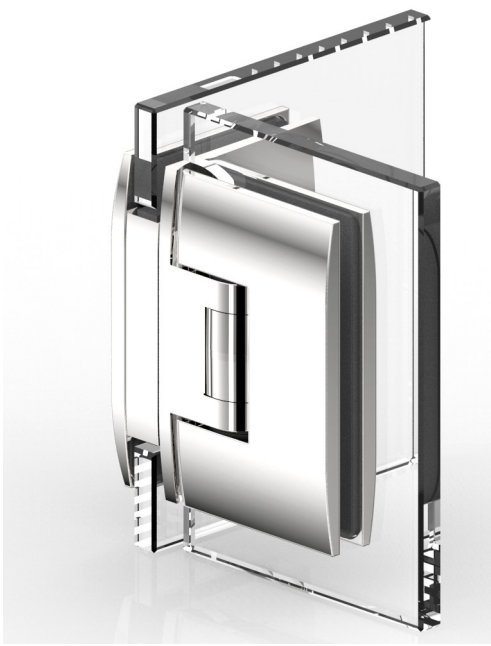

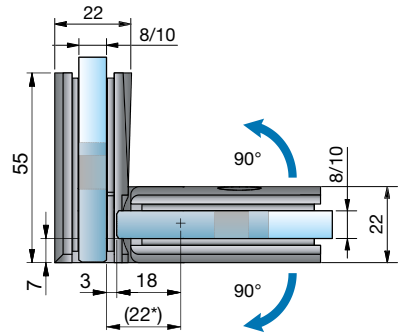

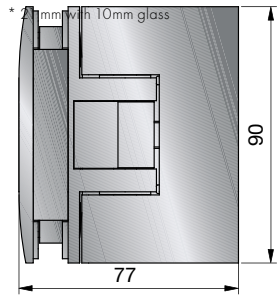

glass processing for 8 mm
without sealing profile

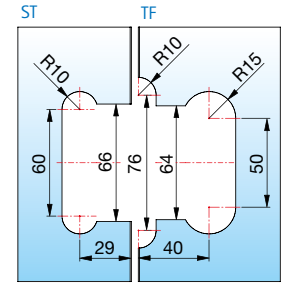

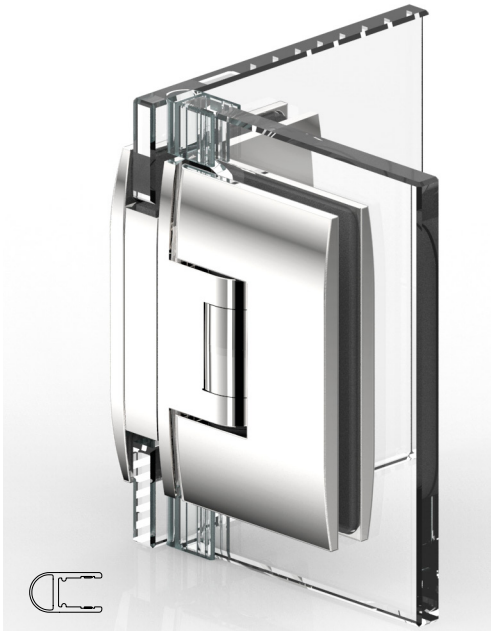

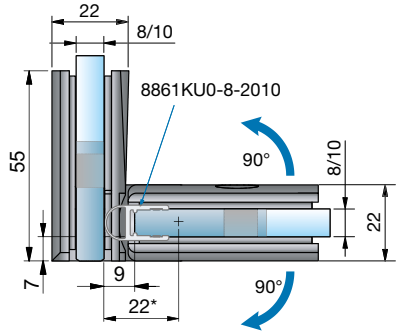

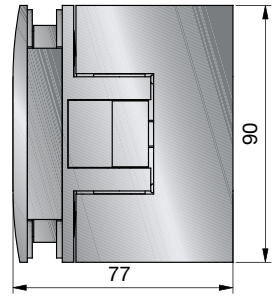

glass processing for 8 mm
with sealing profile 8861KU0-8-2010

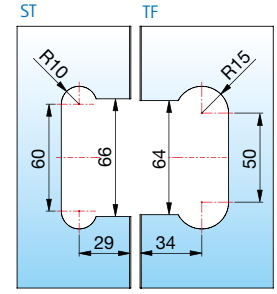

article no.	finish	glass thickness	article description	features	pu/pieces
8410MS7	gloss chrome	8/10 mm	shower swing door hinge PONTERE glass-glass 90°	opens in- and outwards 90°, with adjustable closed position	1/2
8410MS10	matt chrome				
8410MSPVD22	stainless steel optic				

When using the hinges for 10 mm glass thickness, please use the insert set Art. No. HZ-SET10 per hinge free of charge.

ST = side panel I TF = door leaf I W = wall





- to stabilize the shower, we recommend the VIVERE railing in stainless steel for even more stability.





- by positioning the glass within the shower area you can install the shower without the usage of seals. In this case, it is important to consider the angle of the water spray onto the glass.

angle bracket - PONTERE



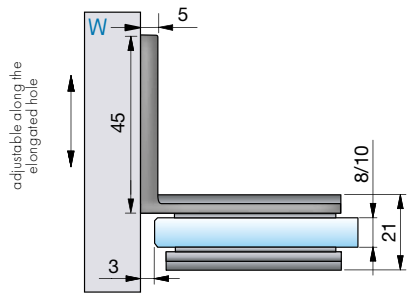

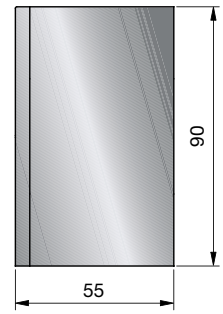

glass processing for 8/10 mm glass

hole Ø 25 mm or edge recess R40

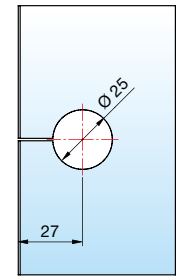

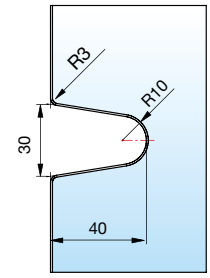

article no.	finish	glass thickness	article description	features	pu/pieces
8418MS7	gloss chrome	8/10 mm	angle bracket PONTERE glass-wall 90°	fixed, adjustable within the recess	1/2
8418MS10	matt chrome				
8418MSPVD22	stainless steel optic				

W = wall



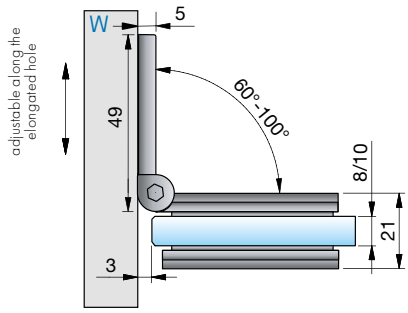

glass processing for 8 mm glass

with other angles the miter angle and/or hole distance is changing according to table.

hole Ø 25 mm or edge recess R40

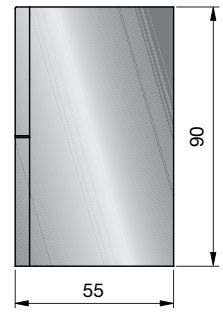

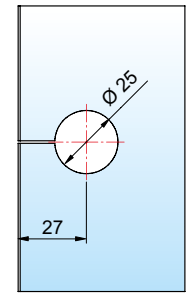

from 90°

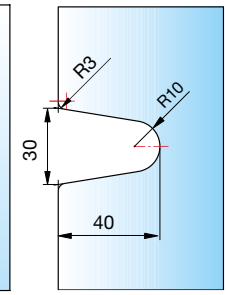

from 60° - 100°

article no.	finish	glass thickness	article description	features	pu/pieces
8430MS7	gloss chrome	8/10 mm	angle bracket PONTERE glass-wall 90°	degree of angle is fully adjustable between 60° and 100°, adjustable along the oblong hole	1/2
8430MS10	matt chrome				
8430MSPVD22	stainless steel optic				

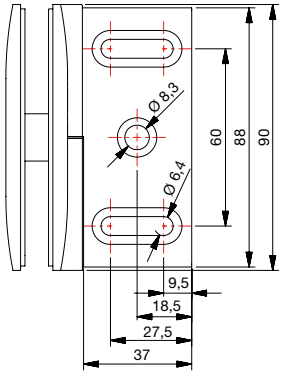

mounting bracket for 8418 and 8430

miter angle and hole distances for 8430MS

corner	hole distance from glass edge	miter angle	remarks
60°	35 mm	30°	-
65°	33 mm	25°	-
70°	32 mm	20°	-
75°	31 mm	15°	-
80°	29 mm	10°	-
85°	28 mm	5°	hole slotted
90°	27 mm	without miter angle	hole slotted
95°	26 mm	5°	hole slotted
100°	26 mm	10°	hole slotted

angle bracket - PONTERE



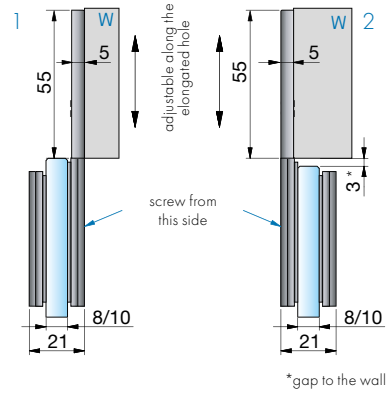

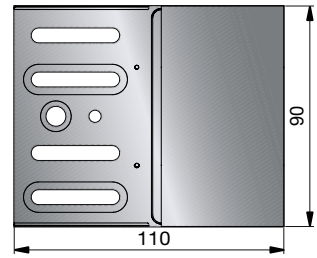

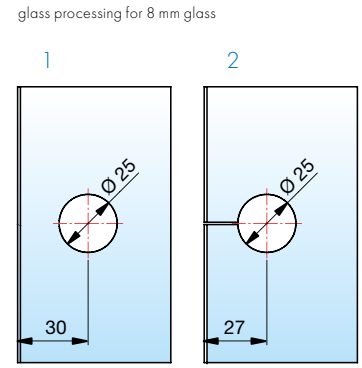

article no.	finish	glass thickness	article description	features	pu/pieces
8428MS7	gloss chrome	8/10 mm	angle bracket PONTERE glass-wall 180°	adjustable along the oblong hole and comes with mounting plate, screw side usable left or right	1/2
8428MS10	matt chrome				
8428MSPVD22	stainless steel optic				

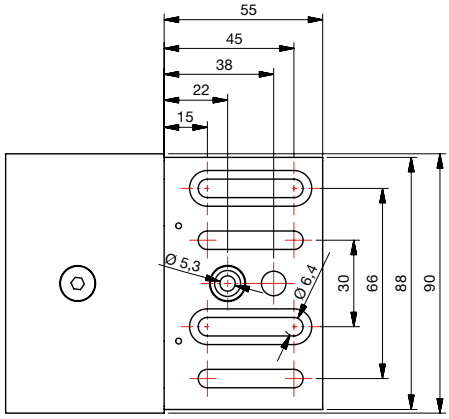

mounting bracket for 8428

W = wall



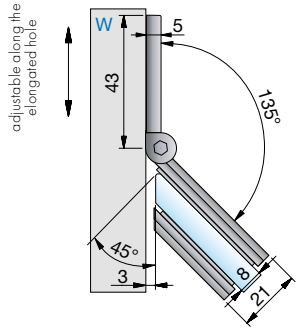

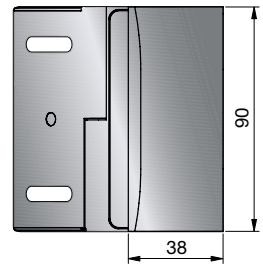

glass processing for 8 mm glass

with other angles the miter angle and/or hole distance is changing according to table.

hole dimension
Ø 22 mm at 110°

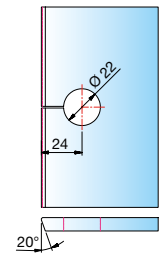

from 90° - 115°

edge recess R40
at 135°

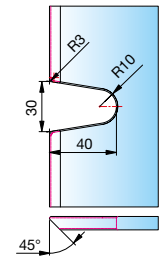

from 120° - 140°

article no.	finish	glass thickness	article description	features	pu/pieces
8427MS7	gloss chrome	8/10 mm	angle bracket PONTERE glass-wall 135°	degree of angle is fully adjustable between 90° - 140°, adjustable within the recess	1/2
8427MS10	matt chrome				
8427MSPVD22	stainless steel optic				

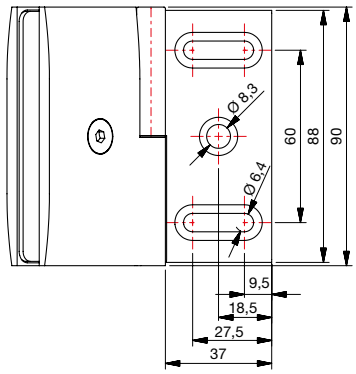

mounting bracket for 8427

miter angle and hole distances for 8427MS

corner	hole distance from glass edge	miter angle	glass processing	remarks
90°	27 mm	0°	hole	-
95°	26 mm	5°	hole	hole slotted
100°	26 mm	10°	hole	hole slotted
105°	25 mm	15°	hole	hole slotted
110°	24 mm	20°	hole	hole slotted
115°	24 mm	25°	hole	hole slotted
120°		30°	edge recess R40	-
125°		35°	edge recess R40	-
130°		40°	edge recess R40	-
135°		45°	edge recess R40	-
140°		50°	edge recess R40	-

angle bracket - PONTERE



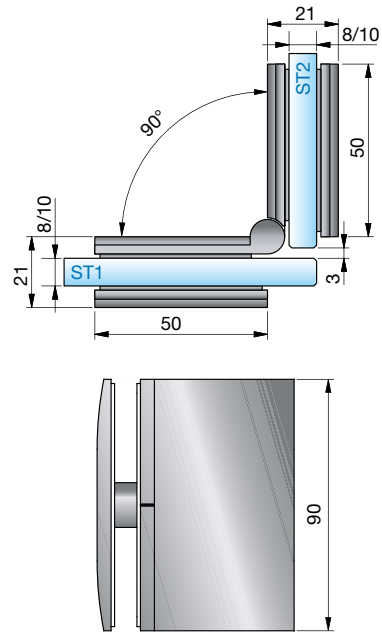

glass processing for 8 mm glass

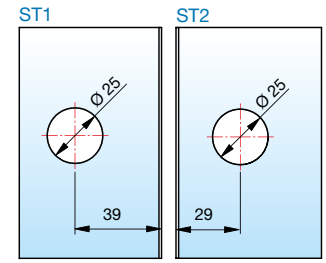

article no.	finish	glass thickness	article description	features	pu/pieces
8421MS7	gloss chrome	8/10 mm	angle bracket PONTERE glass-glass 90°	degree of angle is fully adjustable between 80° and 180°	1/2
8421MS10	matt chrome				
8421MSPVD22	stainless steel optic				



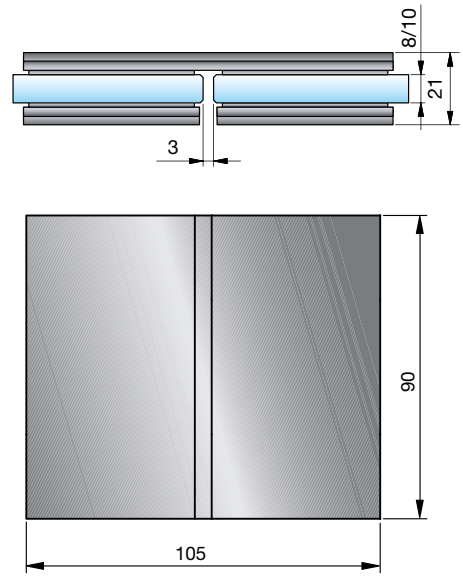

glass processing for 8/10 mm glass

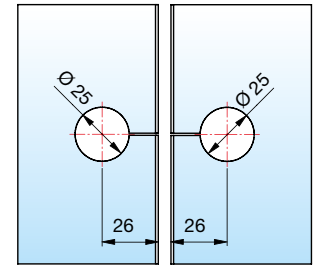

article no.	finish	glass thickness	article description	features	pu/pieces
8422MS7	gloss chrome	8/10 mm	angle bracket PONTERE glass-glass 180°	fixed	1/2
8422MS10	matt chrome				
8422MSPVD22	stainless steel optic				

ST = side panel



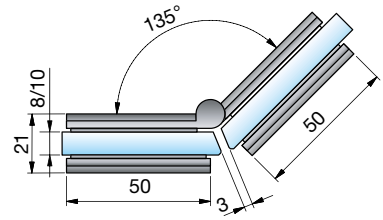

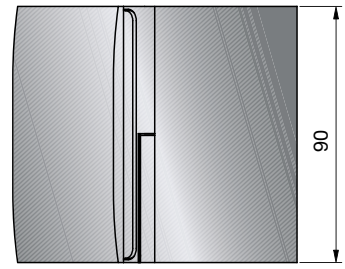

glass processing for 8 mm glass

with other angles the miter angle and/or hole distance is changing according to table.

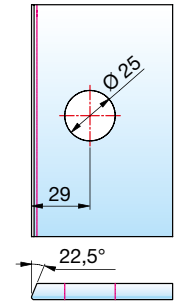

article no.	finish	glass thickness	article description	features	pu/pieces
8425MS7	gloss chrome	8/10 mm	angle bracket PONTERE glass-glass 135°	degree of angle is fully adjustable between 80° and 180°	1/2
8425MS10	matt chrome				
8425MSPVD22	stainless steel optic				

miter angle and hole distances for 8425MS

corner	hole distance from glass edge	miter angle	remarks
80°	38 mm	50°	-
85°	37 mm	47,5°	-
90°	36 mm	45°	-
95°	35 mm	42,5°	-
100°	34 mm	40°	-
105°	33 mm	37,5°	-
110°	32 mm	35°	-
115°	31 mm	32,5°	-
120°	31 mm	30°	-
125°	30 mm	27,5°	-
130°	29 mm	25°	-

corner	hole distance from glass edge	miter angle	remarks
135°	29 mm	22,5°	-
140°	28 mm	20°	hole slotted
145°	27 mm	17,5°	hole slotted
150°	27 mm	15°	hole slotted
155°	26 mm	12,5°	hole slotted
160°	26 mm	10°	hole slotted
165°	25 mm	7,5°	hole slotted
170°	25 mm	5°	hole slotted
175°	24 mm	0°	hole slotted
180°	24 mm	0°	hole slotted

PAVONE – flush lifting swing door hinge





corresponding angle brackets

for PAVONE can be found on page 66.

PS SERVICE

our service for you!

On **www.pauli.de**, you can find many different measurement sheets for all standard installations.

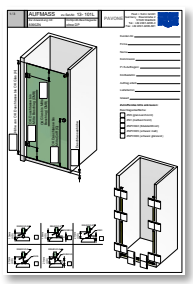
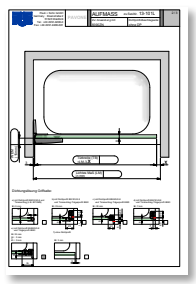
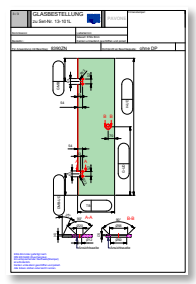

MADE IN GERMANY

Black EDITION



flush lifting swing door hinge PAVONE



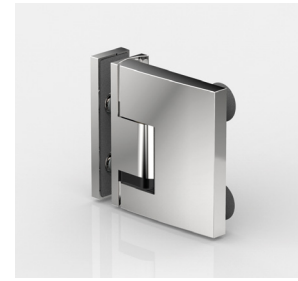

8393ZN

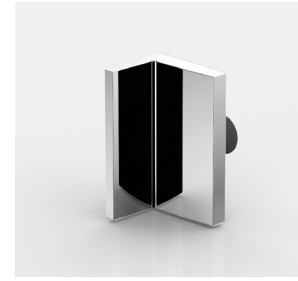

8397ZN

PAVONE – highest demands on functionality and aesthetic

MADE IN GERMANY

With our new innovative developments in the lifting hinge area we give you the possibility, depending on the application, to build the shower without seals.

- 90° opens in- and outwards
- lifting function
- with flush screws
- self-closing during the lowering process
- fully adjustable closed position
- load capacity (2 hinges): 36 kg
  corresponds to a maximum door panel size of 900 x 2000mm with 8 mm glass thickness
- optimized for assembly without seals depending on the building situation (3mm gap to the wall with modified glass processing with mitered edge)
- the durability of the hardware has been tested internally according to DIN EN 14428:2015 5.5.





8390ZN



8392ZN



8399ZN



- flush glass mounting for simpler cleaning
- lifting function - lifts 6 mm, after approx. 54°
- self-closing during the lowering process

- all hinges available also in black

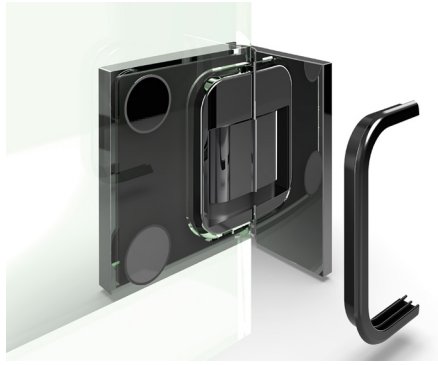

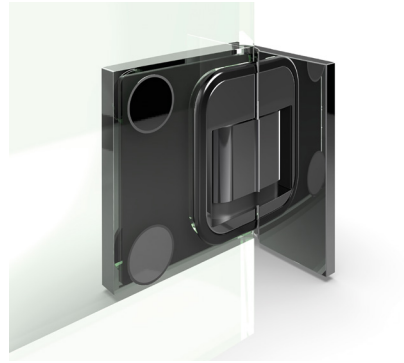

- for a smooth assembly process:
  insert the sealing gasket before aligning the panel.

Since the edge cutout of the glass remains visible largely due to the flushness of the surface, we recommend for the glass processing to use **CNC grinding**. this helps to avoid breakage i.e. over- and under breaking in the area of the edge cutout

Please note that the instruction manual can be found on page 382.

PAVONE – flush lifting swing door hinge

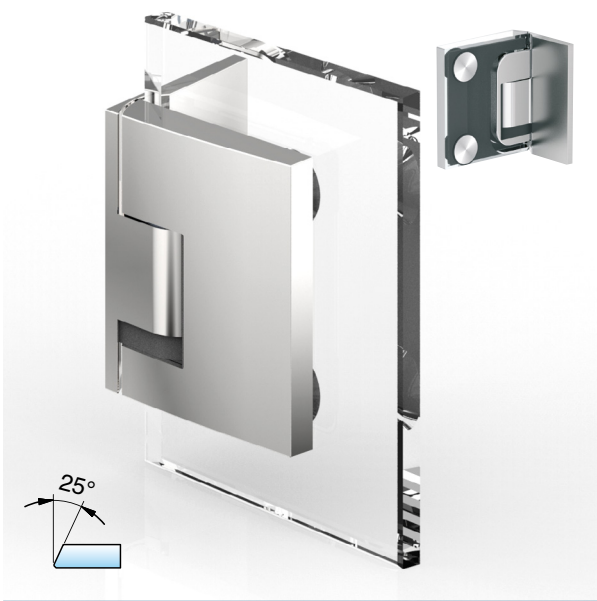

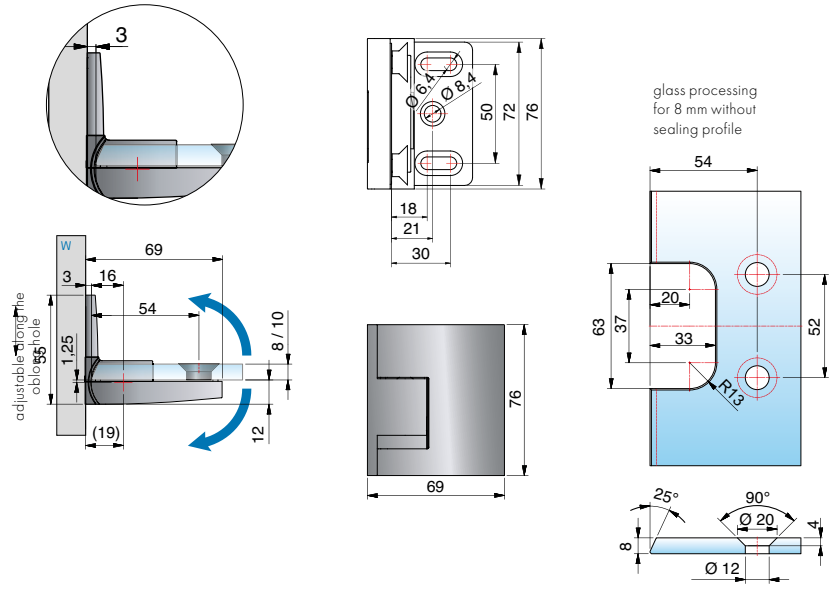

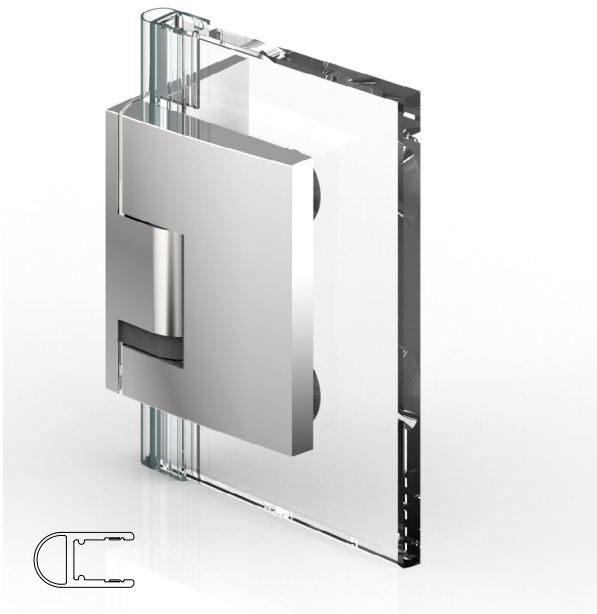

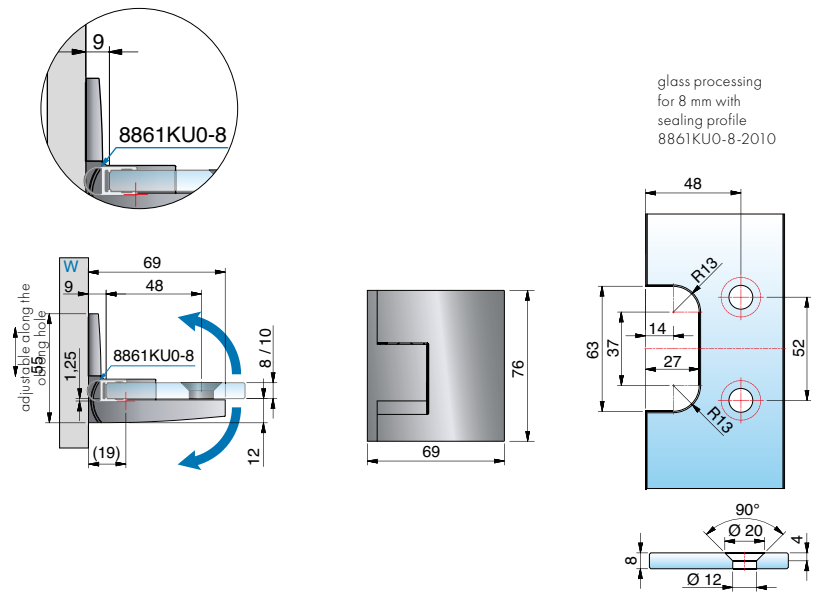

article no.	finish	glass thickness	article description	features	pu/pieces
8390ZN5-L 8390ZN1-L 8390ZNPVD22-L 8390ZNPVD35-L	gloss chrome matt chrome stainless steel optic black matt	8/10 mm	PAVONE – shower swing door hinge glass-wall 90° mounted on the left, opening in- and outwards	glass fixtures flush, concealed screws with cover plate, point fixture assembly adjustable independent of each other ± 2 mm in any direction, closed position adjustable. assembly without side seal possible with altered glass processing	1/2

Attention: Please note the information on page 68!

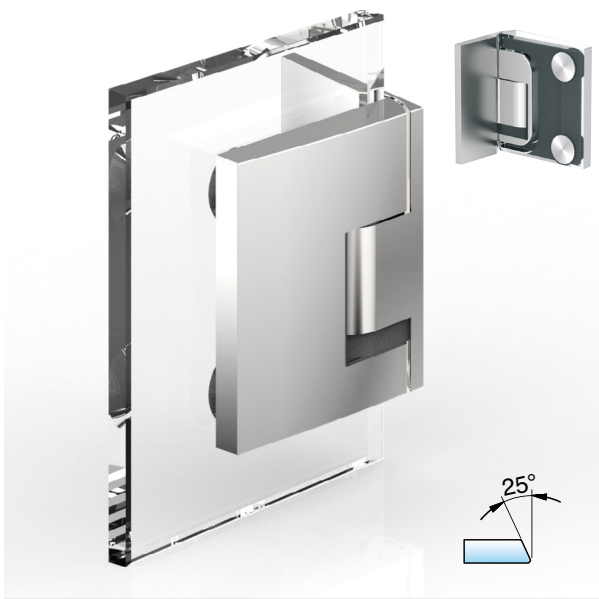

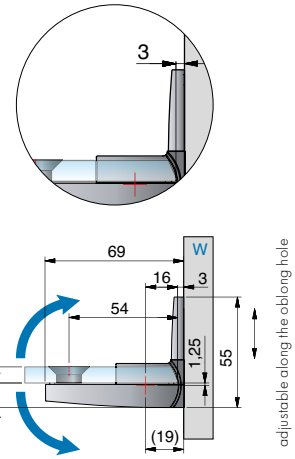

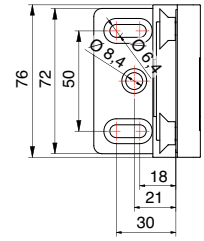

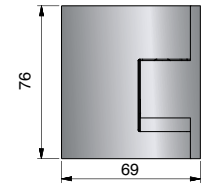

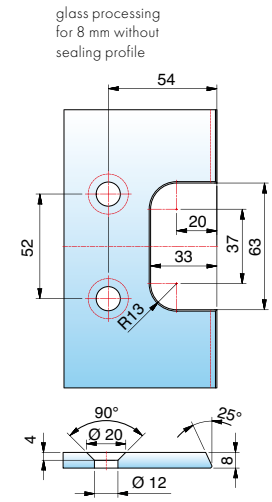

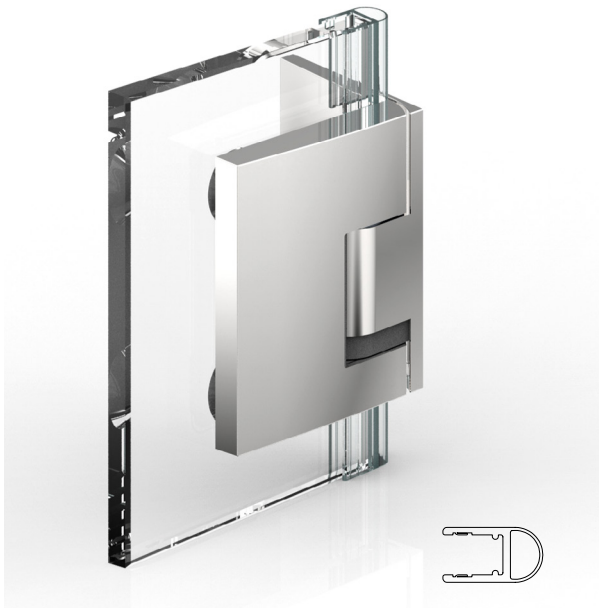

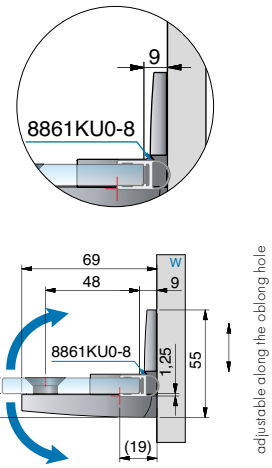

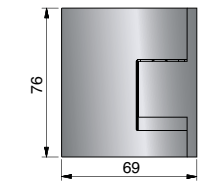

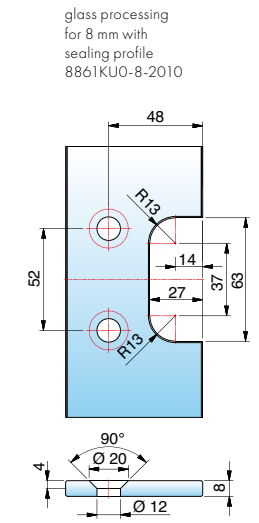

article no.	finish	glass thickness	article description	features	pu/pieces
8390ZN5-R 8390ZN1-R 8390ZNPVD22-R 8390ZNPVD35-R	gloss chrome matt chrome stainless steel optic black matt	8/10 mm	PAVONE – shower swing door hinge glass-wall 90° mounted on the right, opening in- and outwards	glass fixtures flush, concealed screws with cover plate, point fixture assembly adjustable independent of each other ± 2 mm in any direction, closed position adjustable. assembly without side seal possible with altered glass processing	1/2

TF = door panel I W = wall

PAVONE – flush lifting swing door hinge

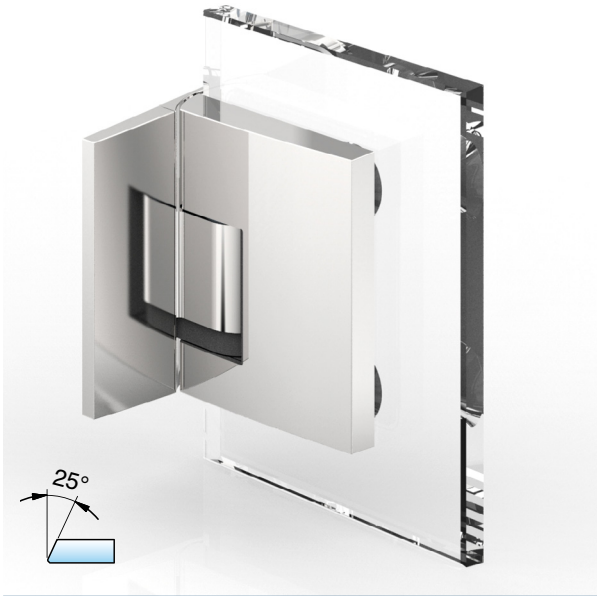

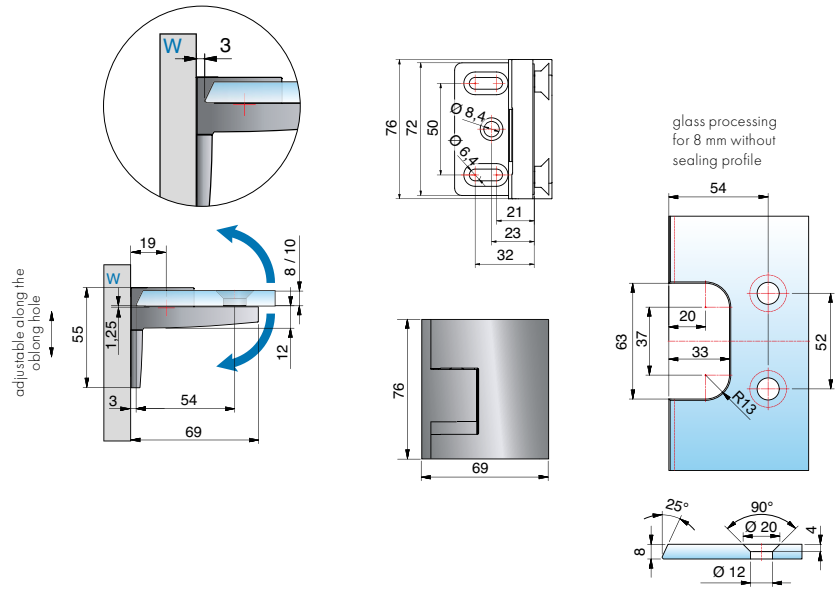

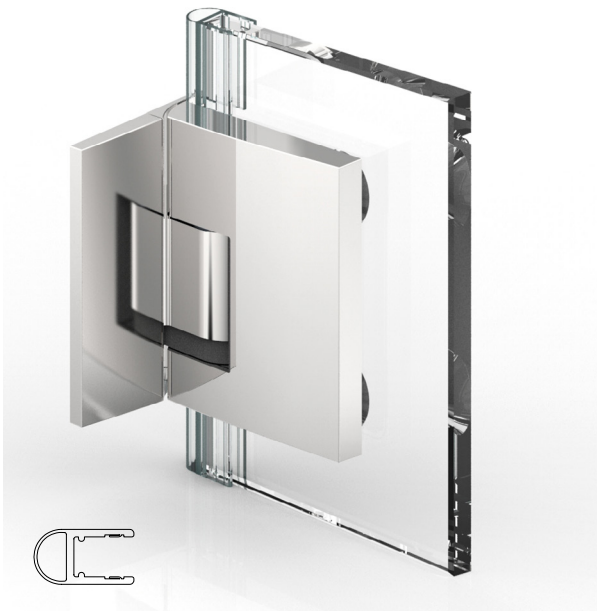

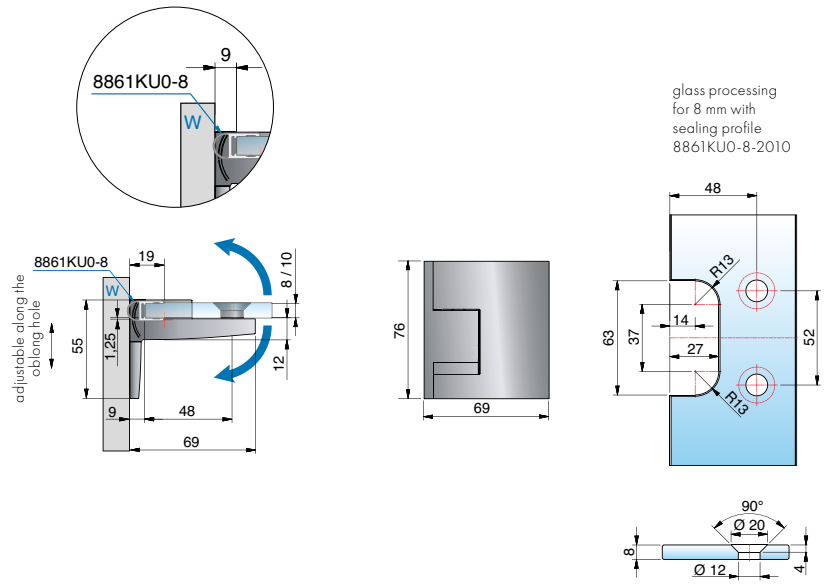

article no.	finish	glass thickness	article description	features	pu/pieces
8391ZN5-L 8391ZN1-L 8391ZNPVD22-L 8391ZNPVD35-L	gloss chrome matt chrome stainless steel optic black matt	8/10 mm	PAVONE – shower swing door hinge glass-wall 90° mounted on the left, opening in- and outwards, wall plate outside	glass fixtures flush, concealed screws with cover plate, point fixture assembly adjustable independent of each other ± 2 mm in any direction, closed position adjustable	1/2

Attention: Please note the information on page 68!

PAVONE – flush lifting swing door hinge



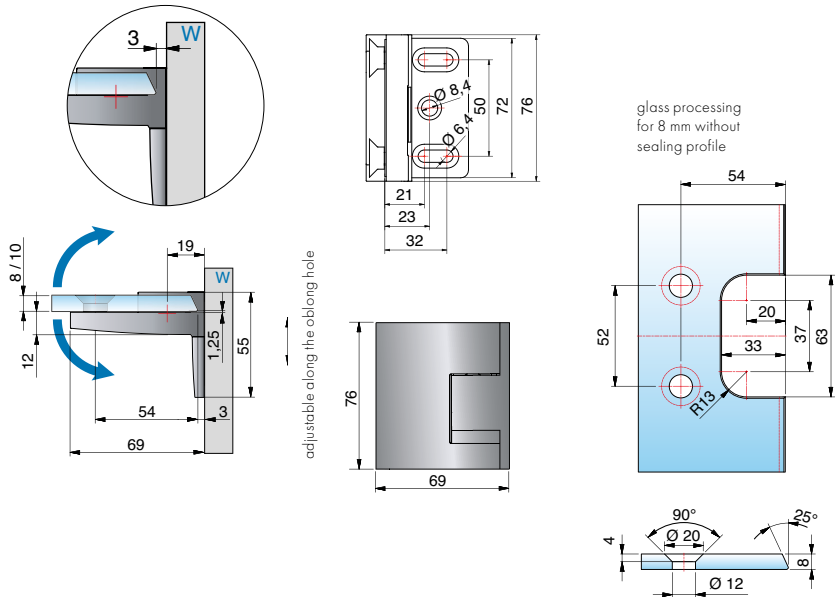

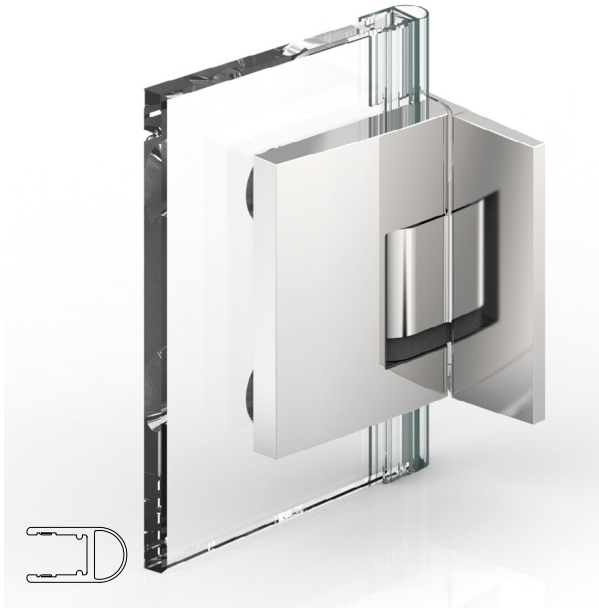

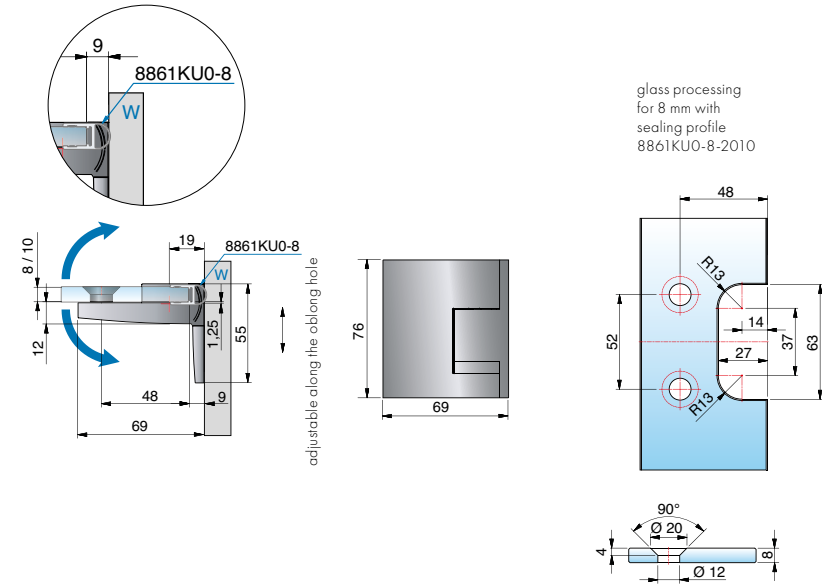

article no.	finish	glass thickness	article description	features	pu/pieces
8391 ZN5-R 8391 ZN1-R 8391 ZNPVD22-R 8391 ZNPVD35-R	gloss chrome matt chrome stainless steel optic black matt	8/10 mm	PAVONE – shower swing door hinge glass-wall 90° mounted on the right, opening in- and outwards wall plate outside	glass fixtures flush, concealed screws with cover plate, point fixture assembly adjustable independent of each other ± 2 mm in any direction, closed position adjustable	1/2

TF = door panel I W = wall

PAVONE – flush lifting swing door hinge

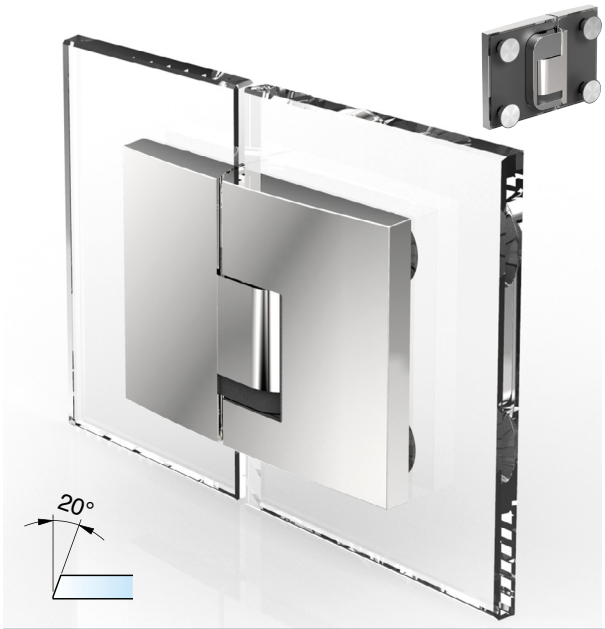

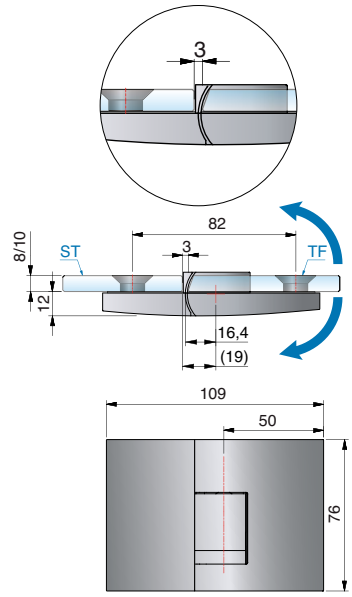

glass processing for 8 mm
without sealing profile

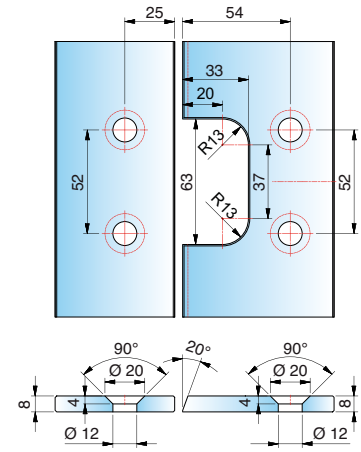

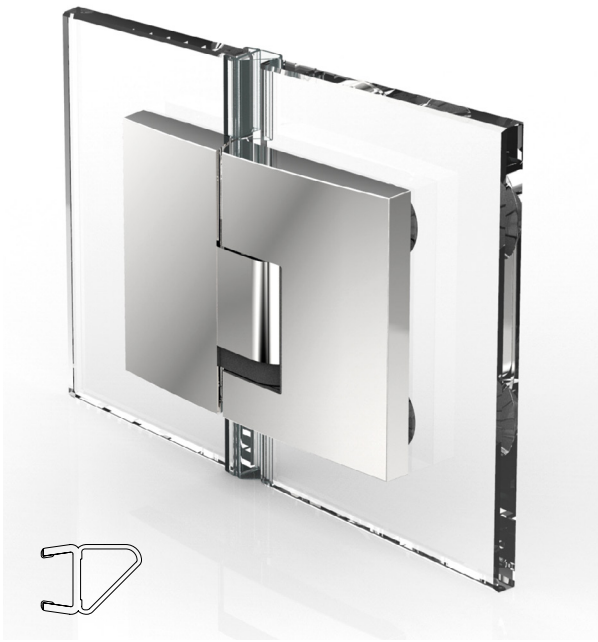

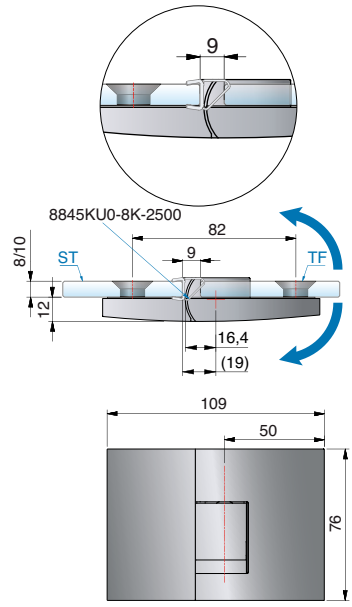

glass processing for 8 mm with
sealing profile 8861KU0-8-2010

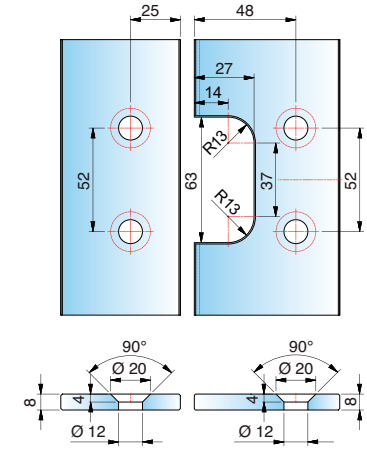

article no.	finish	glass thickness	article description	features	pu/pieces
8392ZN5-L 8392ZN1-L 8392ZNPVD22-L 8392ZNPVD35-L	gloss chrome matt chrome stainless steel optic black matt	8/10	PAVONE – shower swing door hinge glass-glass 180°, mounted on the left, opening in- and outwards	glass fixtures flush, concealed screws with cover plate, point fixture assembly adjustable independent of each other ± 2 mm in any direction, closed position adjustable	1/2

Attention: Please note the information on page 68!

PAVONE – flush lifting swing door hinge

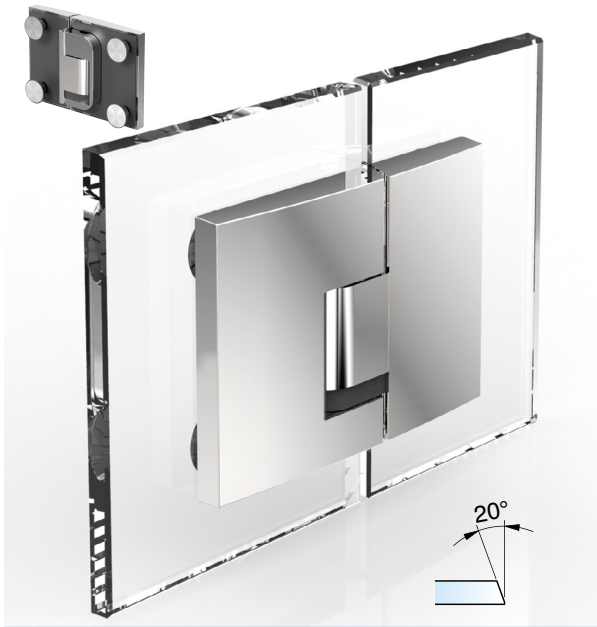

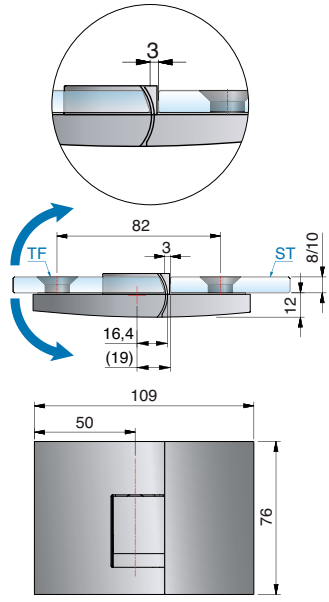

glass processing for 8 mm
without sealing profile

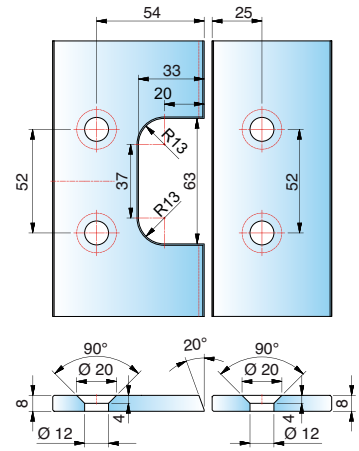

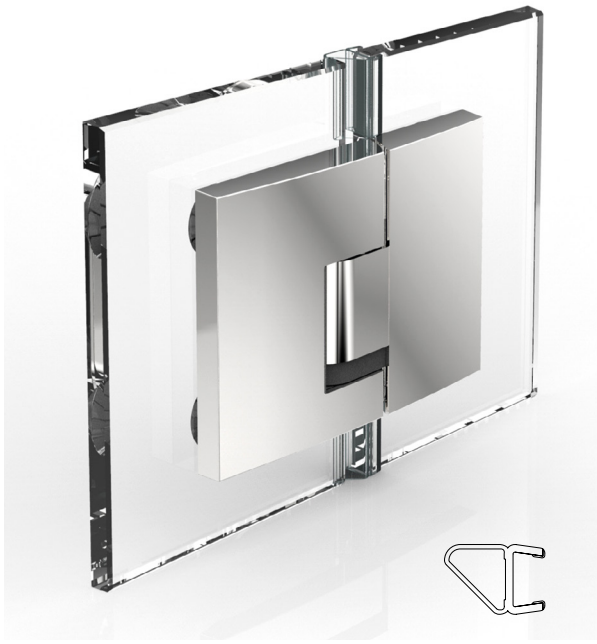

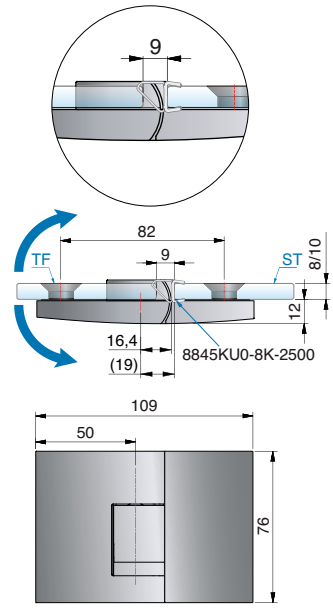

glass processing for 8 mm with
sealing profile 8861KU0-8-2010

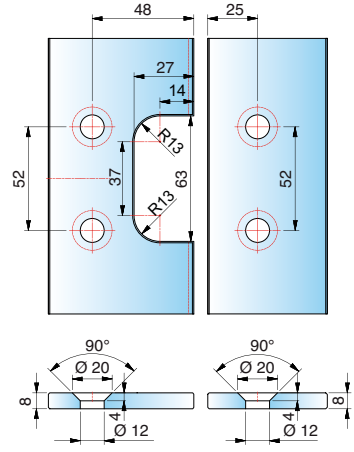

article no.	finish	glass thickness	article description	features	pu/pieces
8392ZN5-R 8392ZN1-R 8392ZNPVD22-R 8392ZNPVD35-R	gloss chrome matt chrome stainless steel optic black matt	8/10	PAVONE – shower swing door hinge glass-glass 180°, mounted on the right, opening in- and outwards	glass fixtures flush, concealed screws with cover plate, point fixture assembly adjustable independent of each other ± 2 mm in any direction, closed position adjustable	1/2

TF = door panel I W = wall

PAVONE – flush lifting swing door hinge

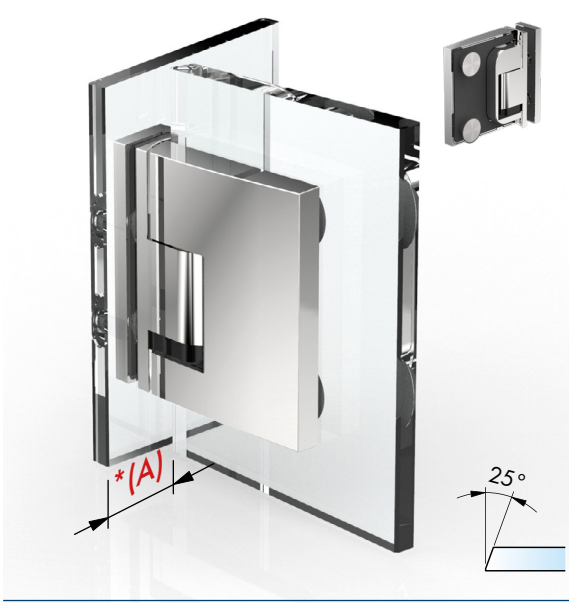

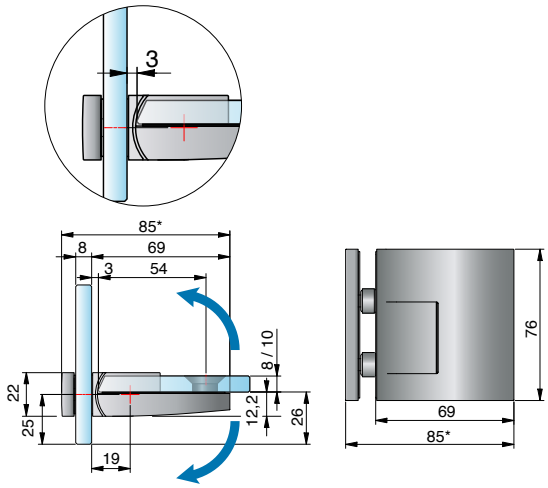

glass processing for 8 mm
without sealing profile

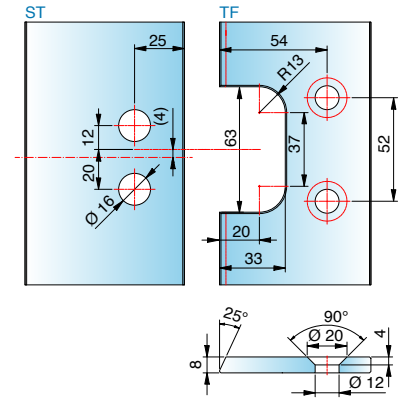



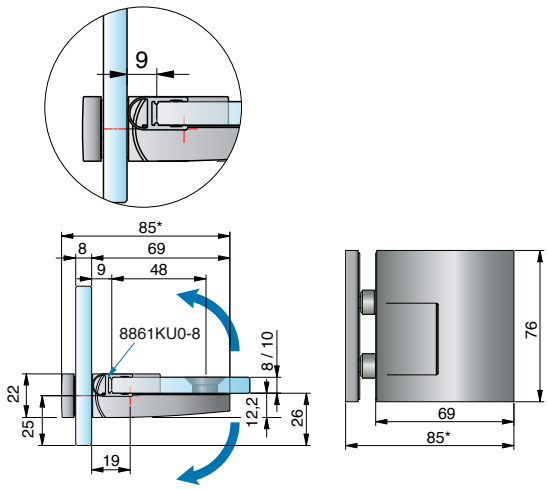

glass processing for 8 mm
with sealing profile 8861KU0-8-2010

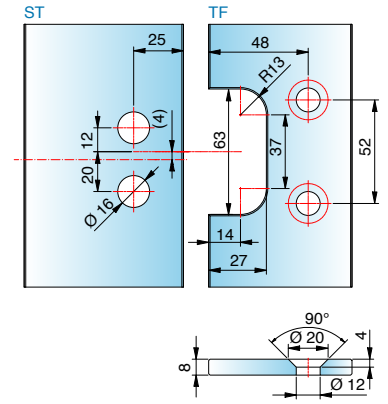

article no.	finish	glass thickness	article description	features	pu/pieces
8393ZN5-L 8393ZN1-L 8393ZNPVD22-L 8393ZNPVD35-L	gloss chrome matt chrome stainless steel optic black matt	8/10 mm	PAVONE – shower swing door hinge glass-glass 90°, mounted on the left, opening in- and outwards	glass fixtures flush, concealed screws with cover plate, point fixture assembly adjustable independent of each other ± 2 mm in any direction, closed position adjustable *offset dimension (A) on the side panel can be determined by the installer max. door width: 750 mm max. door weight: 30 kg	1/2

Attention: Please note the information on page 68!

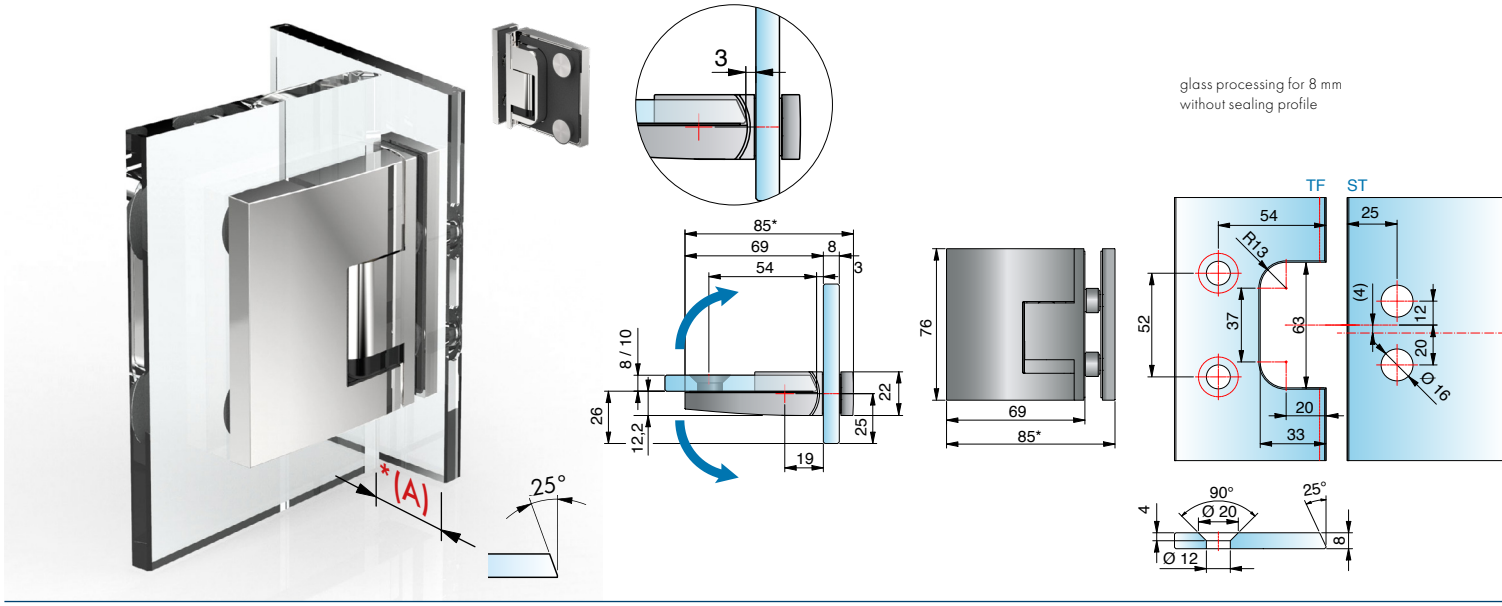

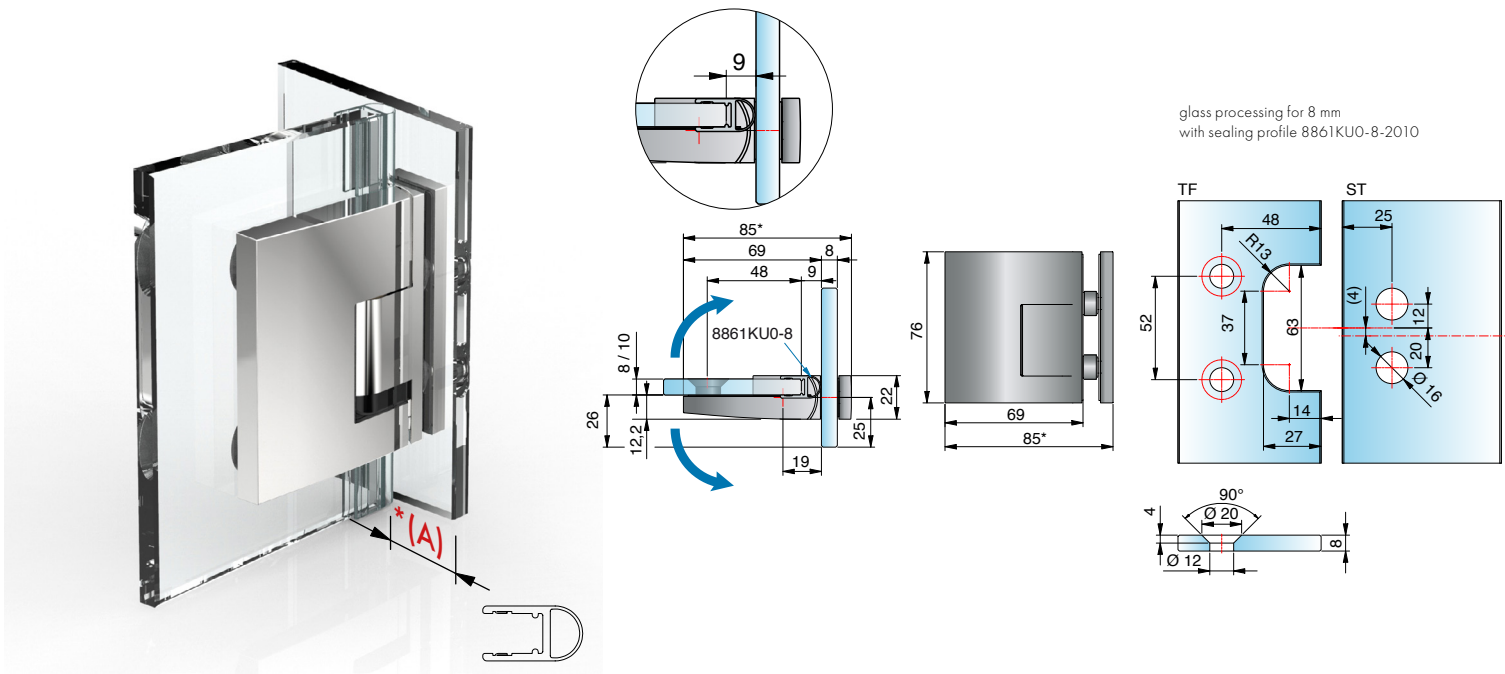

article no.	finish	glass thickness	article description	features	pu/pieces
8393ZN5-R	gloss chrome	8/10 mm	PAVONE – shower swing door hinge glass-glass 90°, mounted on the right, opening in- and outwards	glass fixtures flush, concealed screws with cover plate, point fixture assembly adjustable independent of each other ± 2 mm in any direction, closed position adjustable *offset dimension (A) on the side panel can be determined by the installer max. door width: 750 mm max. door weight: 30 kg	1/2
8393ZN1-R	matt chrome				
8393ZNPVD22-R	stainless steel optic				
8393ZNPVD35-R	black matt				

TF = door panel I W = wall

PAVONE – flush lifting swing door hinge

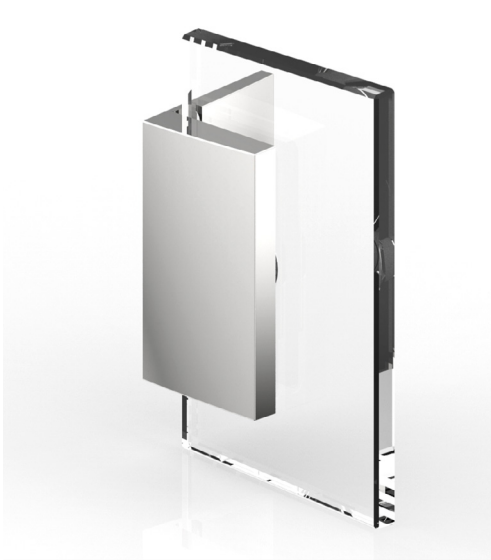



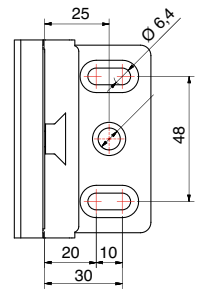

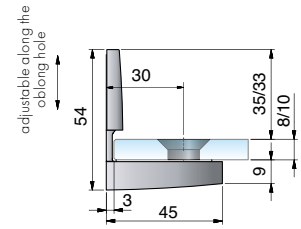

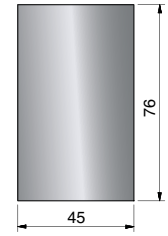

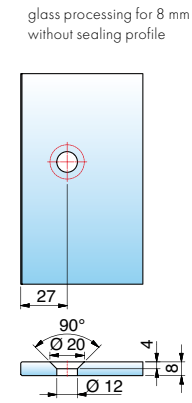

article no.	finish	glass thickness	article description	features	pu/pieces
8398ZN5 8398ZN1 8398ZNPVD22 8398ZNPVD35	gloss chrome matt chrome stainless steel optic black matt	8/10 mm	PAVONE – angle bracket glass-wall 90°	glass mount flush, bracket inside with oblong adjustment, cover plate, point fixtures adjustable ± 2mm in any direction	1/2





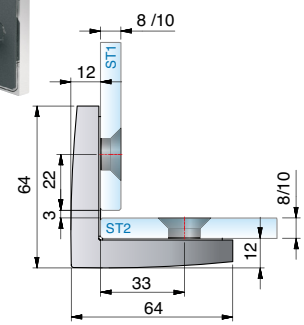

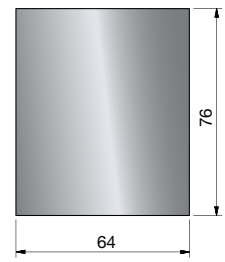

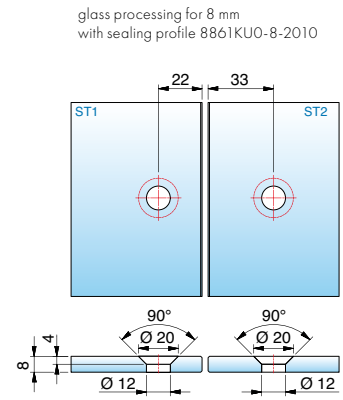

article no.	finish	glass thickness	article description	features	pu/pieces
8399ZN5 8399ZN1 8399ZNPVD22 8399ZNPVD35	gloss chrome matt chrome stainless steel optic black matt	8/10 mm	PAVONE – angle bracket glass-glass 90°	glass mount flush, cover plate, point fixtures adjustable ± 2mm in any direction	1/2

ST = side panel I TF = door panel I W = wall





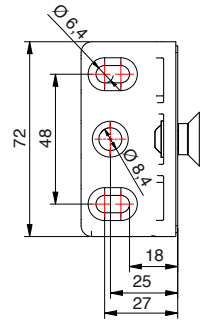

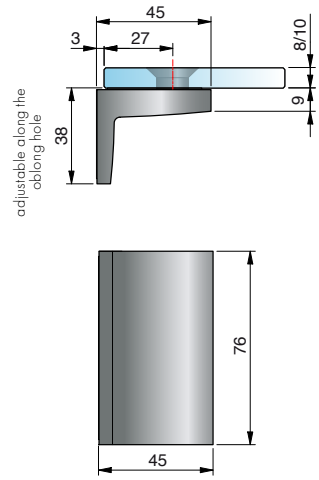

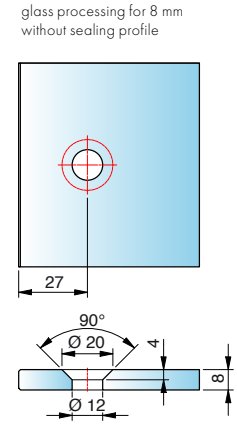

article no.	finish	glass thickness	article description	features	pu/pieces
8397ZN5 8397ZN1 8397ZNPVD22 8397ZNPVD35	gloss chrome matt chrome stainless steel optic black matt	8/10 mm	PAVONE – angle bracket glass-wall 90°	glass mount flush, bracket inside with oblong adjustment, cover plate, point fixtures adjustable ± 2mm in any direction	1/2

Attention: please take into account when planning!

The hinges lifts the door 6mm when opened. This could lead to a collision with the stabilizer-bar.
Here we offer you various options:

new stabilizer angle brackets

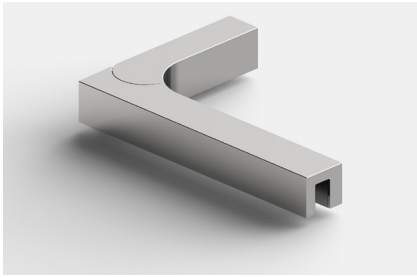

8439ZN_L-180/280 – see page 340

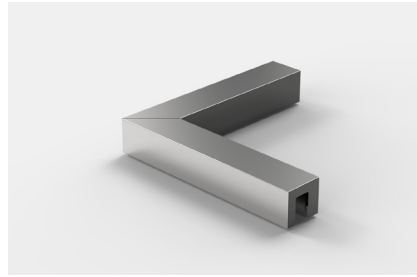

8438ZN5 -150/250 – see page 342

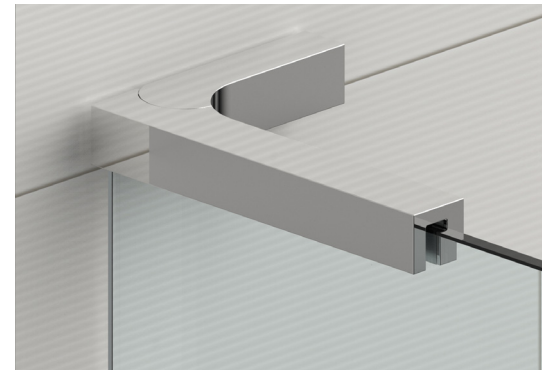

glass connections for railing system



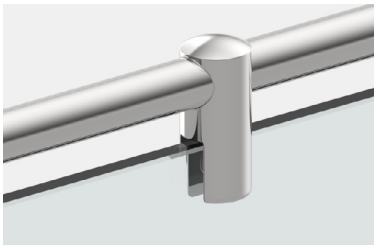



8744ZN5-GTL – see page 330

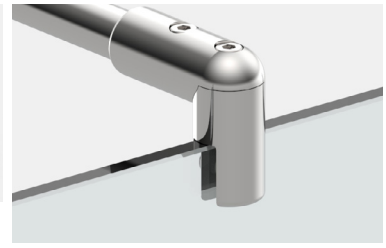



8744ZN5-GL – see page 330

glass wall stabilizer-bar 45°



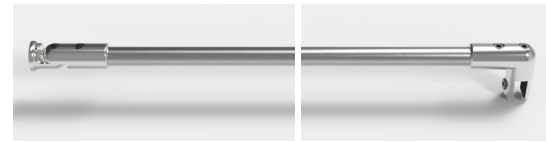

8746ZN_-460 – see page 328

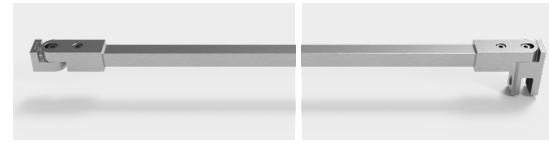

8796ZN_-460 – see page 320



8432MS_
different lengths, see on page 332



8474MS_
different lengths, see on page 334

set for flush applications





8471MS7 – see page 323
for 8474MS and 8475MS



8794ZN5-GF – see page 323

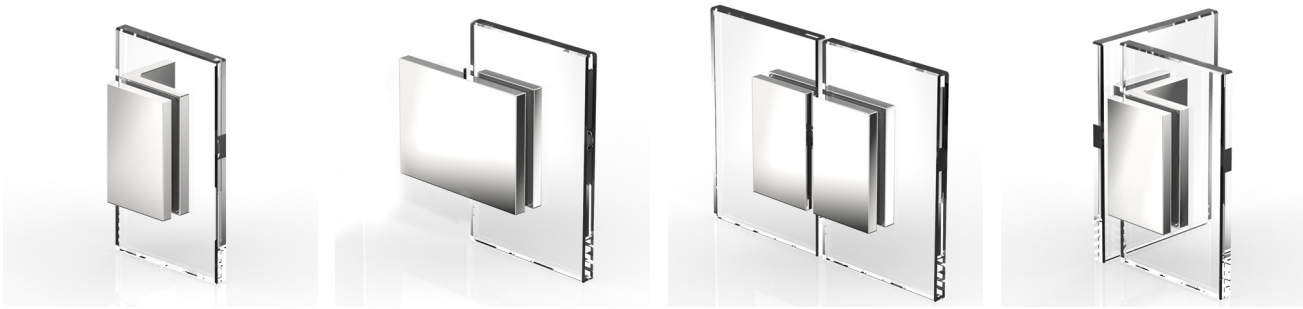

corresponding angle brackets

for FLAMEA+ can be found on page 84.

our service for you!

On **www.pauli.de**, you can find many different measurement sheets for all standard installations.

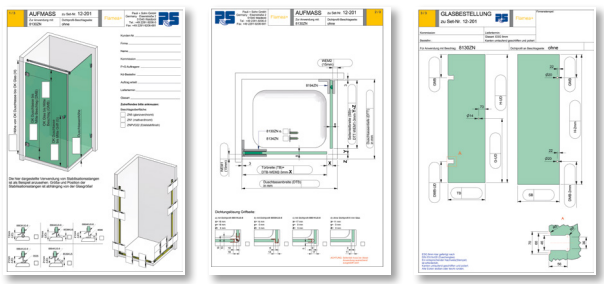

MADE IN GERMANY

Black EDITION

Gold EDITION



shower swing door hinge FLAMEA+



FLAMEA+ – uncompromising and strong

MADE IN GERMANY

The FLAMEA+ series was developed for showers of the top class. the optimum installation situation: glass showers in XL-format. FLAMEA+ meets all aesthetic and functional requirements for projects and private homes.

- 90° shower swing door hinge
- self-closing during the last 15 - 20°
- centered pivot-point, therefore usage as swing door possible
- fully adjustable closed position
- loading capacity (2 hinges): 45 kg
  corresponding to a glass door with the dimension 900 x 2000 mm and a glass thickness of 10 mm
- optimized for installation without sealing profile
- concealed screws
- minimized gap distance
- the durability of the hardware has been tested internally according to DIN EN 14428:2015 5.5.



8130ZN 8132ZN

- finish: gloss nickel



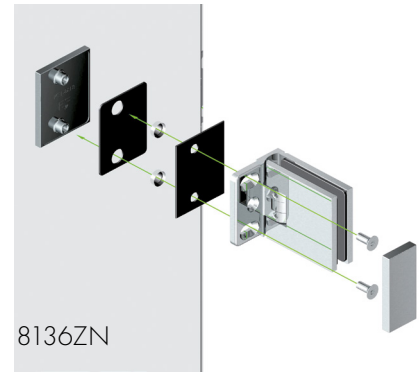

- for glass-glass 90°, only drilled holes are required in the side panel, so that the glass door panel is set inwards and the overhang (A) can be determined by the installer.
- the higher loading capacity allows generous and fascinating glass-situations

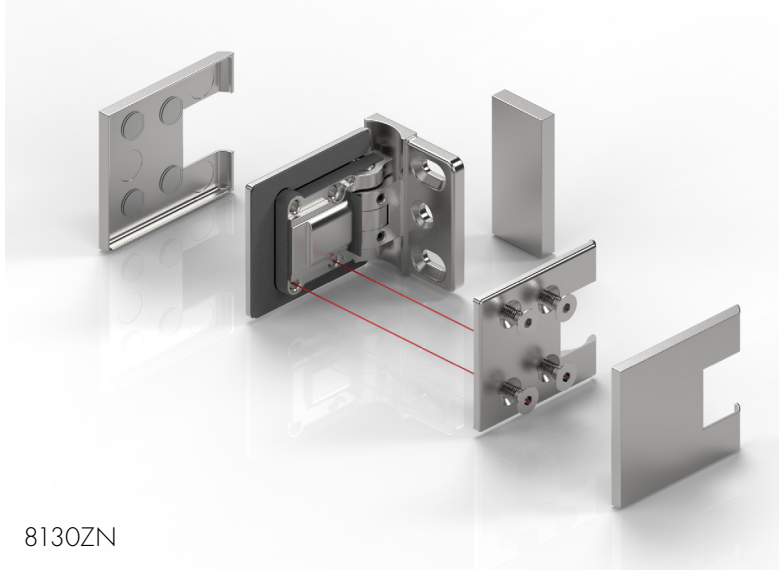

8130ZN

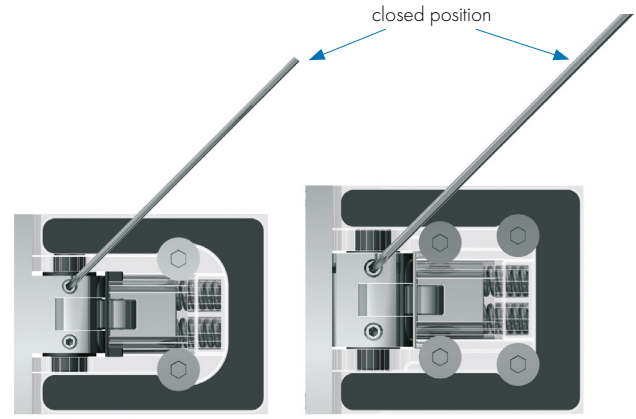

8180ZN 8130ZN

- 10% larger than FLAMEA but with a 25% higher loading capacity
- four fastening screws for a powerful connection
- stable and strong plate for wall-connection
- concealed screws

Please note that the instruction manual can be found on page 382.

shower swing door hinge - FLAMEA+



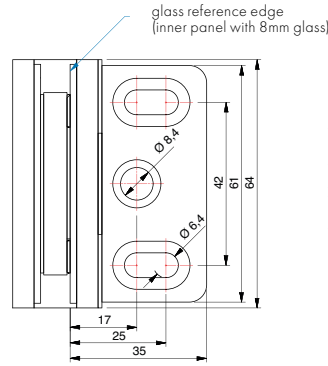

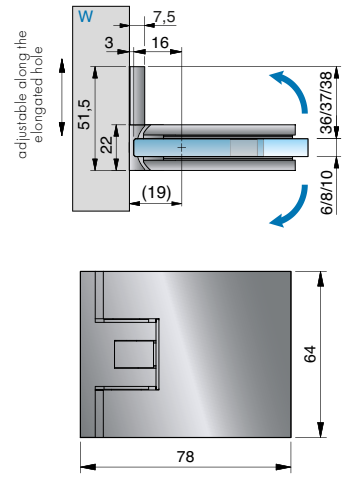

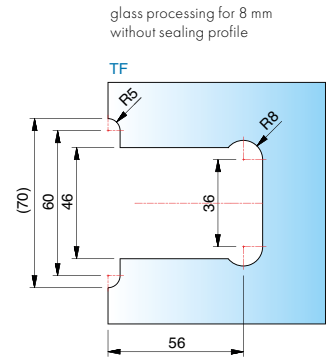



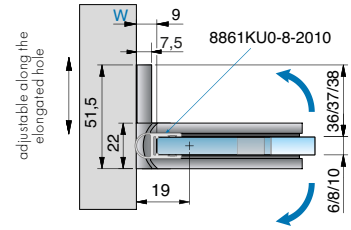

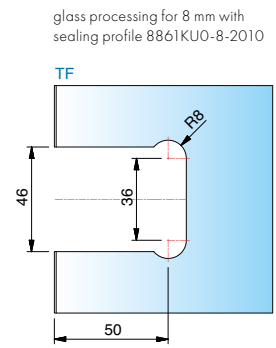

article no.	finish	glass thickness	article description	features	pu/pieces
8130ZN5	gloss chrome	6/8/10 mm	shower swing door hinge FLAMEA+ glass-wall 90°	opens in- and outwards 90°, with adjustable closed position, adjustable anlong the oblong hole, single sided mounting plate, concealed screws shim plates in thicknesses 2/3/5/10 mm can be found on page 74. When using the hinges for 6 or 10 mm glass thickness, please use the insert set Art. No. HZ-SET3 per hinge free of charge.	1/2
8130ZN1	matt chrome				
8130ZN10	gloss nickel				
8130ZNPVD22	stainless steel optic				
8130ZNPVD20	gold optic				
8130ZNPVD35	black matt				
8130ZN135	deep black matt				
8130ZN134	white matt				



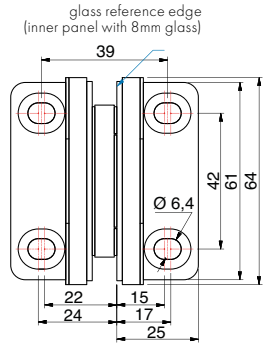

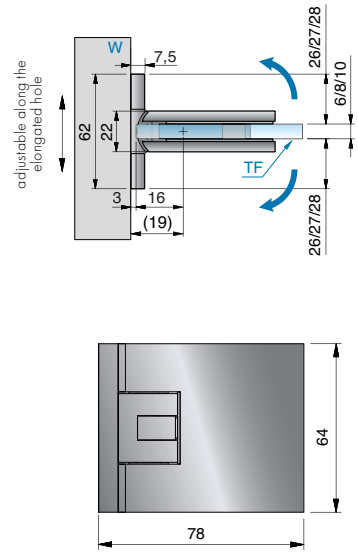

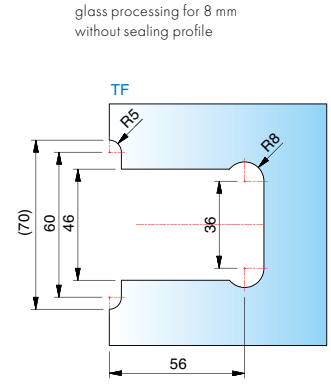



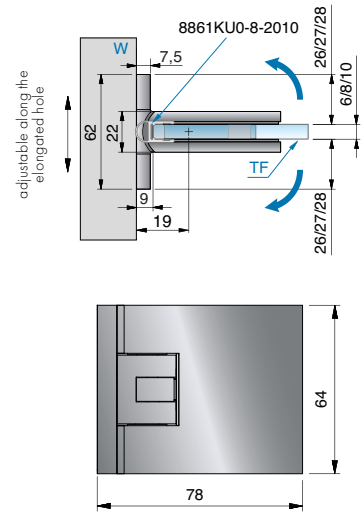

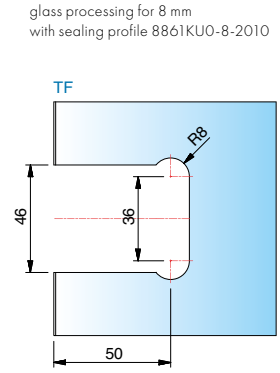

article no.	finish	glass thickness	article description	features	pu/pieces
8134ZN5	gloss chrome	6/8/10 mm	shower swing door hinge FLAMEA+ glass-wall 90°	opens in- and outwards 90°, with adjustable closed position, adjustable anlong the oblong hole, double sided mounting plate, concealed screws shim plates in thicknesses 2/3/5/10 mm can be found on page 75. When using the hinges for 6 or 10 mm glass thickness, please use the insert set Art. No. HZ-SET3 per hinge free of charge.	1/2
8134ZN1	matt chrome				
8134ZN10	gloss nickel				
8134ZNPVD22	stainless steel optic				
8134ZNPVD20	gold optic				
8134ZNPVD35	black matt				

ST = side panel I TF = door panel I W = wall

shower swing door hinge - FLAMEA+



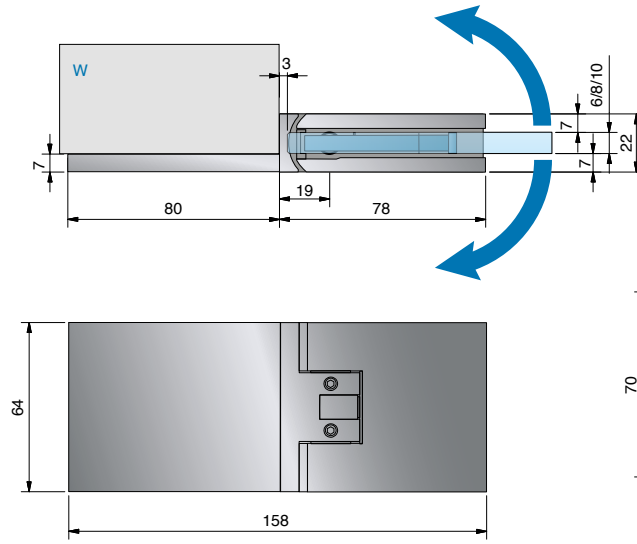

glass processing for 8 mm
without sealing profile

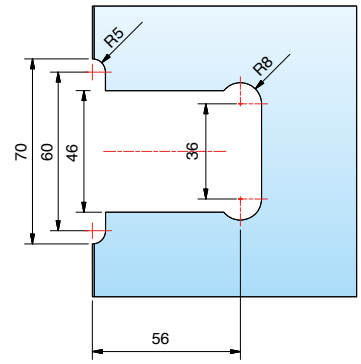



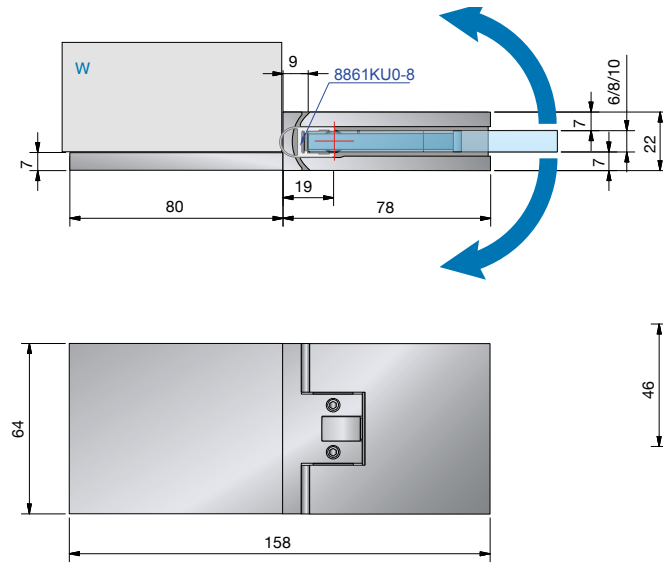

glass processing for 8 mm
with sealing profile 8857KU0-8-2010

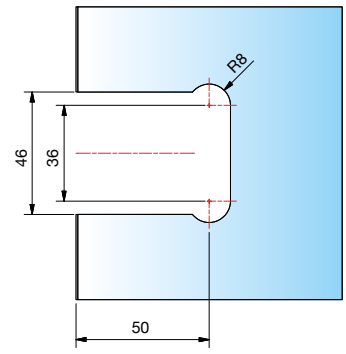



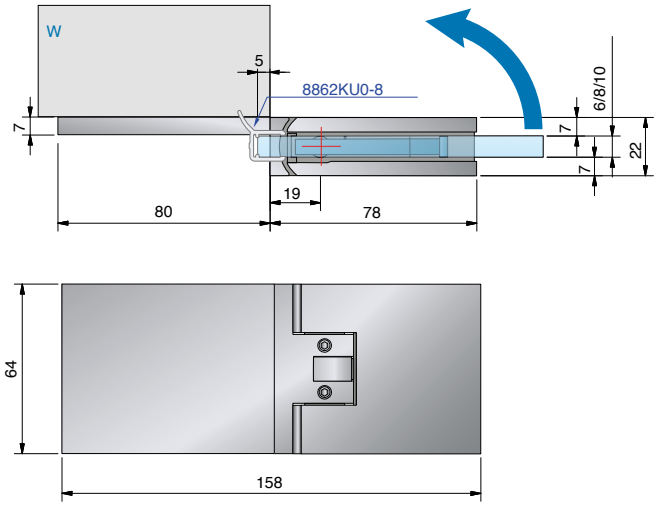

glass processing for 8 mm
with sealing profile 8861KU0-8-2010

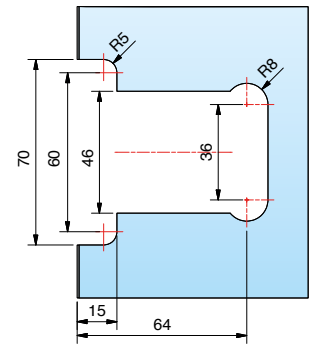

article no.	finish	glass thickness	article description	features	pu/pieces
8133ZN5	gloss chrome	6/8/10 mm	shower swing door hinge FLAMEA+ glass-wall 180°	opens in- and outwards 90° depending on sealing profile, with adjustable closed position, adjustable anlong the oblong hole, concealed screws max door panel width 900 mm, loading capacity (2 hinges): 40 kg when using max. 900 x 2200 x.8 mm When using the hinges for 6 or 10 mm glass thickness, please use the insert set Art. No. HZ-SET3 per hinge free of charge.	1/2
8133ZN1	matt chrome				
8133ZN10	gloss nickel				
8133ZNPVD22	stainless steel optic				
8133ZNPVD20	gold optic				
8133ZNPVD35	black matt				

mounting bracket for 8133ZN

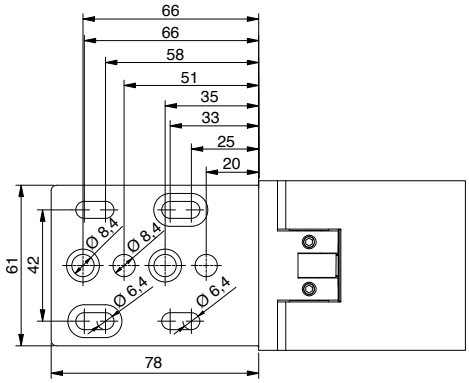

ST = side panel I TF = door panel I W = wall

shower swing door hinge - FLAMEA+



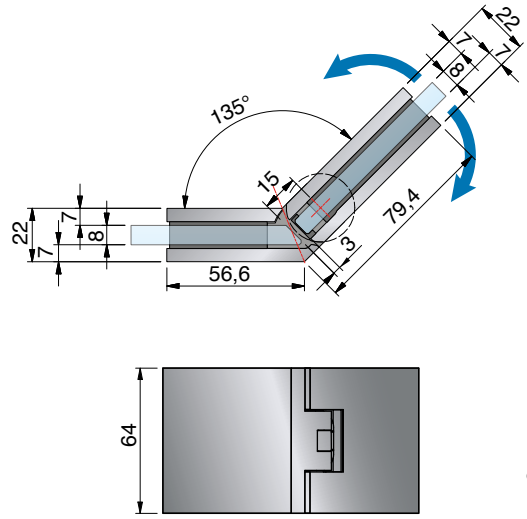

glass processing for 8 mm
without sealing profile

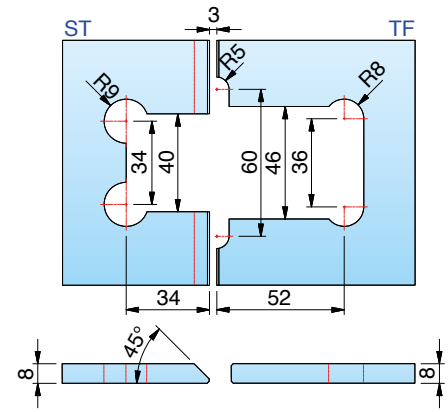



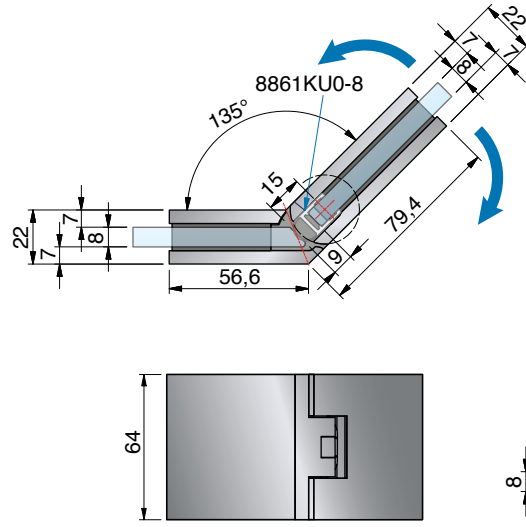

glass processing for 8 mm
with sealing profile 8861KU0-8-2010

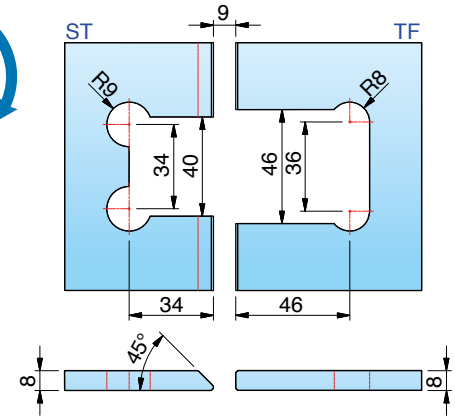



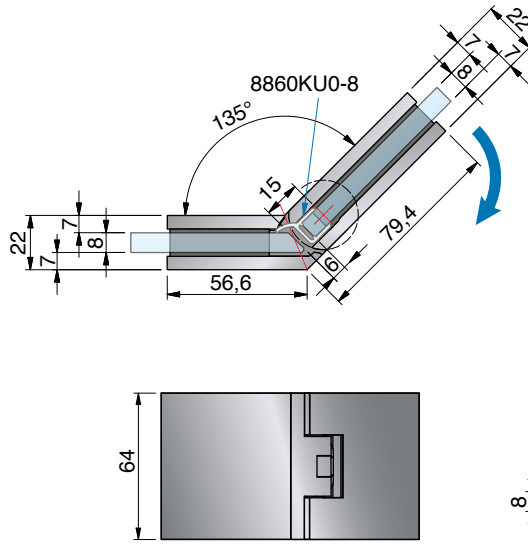

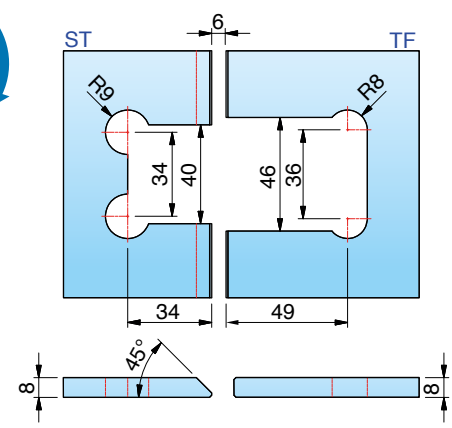

article no.	finish	glass thickness	article description	features	pu/pieces
8131ZN5	gloss chrome	6/8/10 mm	shower swing door hinge FLAMEA+ glass-glass 135°	opens in- and outwards 90° depending on sealing profile, with adjustable closed position, concealed screws with cover plate When using the hinges for 6 or 10 mm glass thickness, please use the insert set Art. No. HZ-SET4 per hinge free of charge.	1/2
8131ZN1	matt chrome				
8131ZN10	gloss nickel				
8131ZNPVD22	stainless steel optic				
8131ZNPVD20	gold optic				
8131ZNPVD35	black matt				

ST = side panel I TF = door panel I W = wall

shower swing door hinge - FLAMEA+



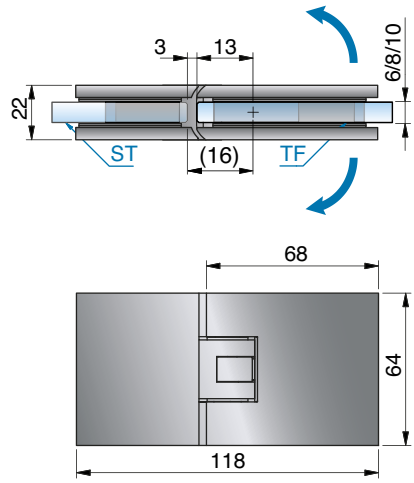

glass processing for 8 mm
without sealing profile

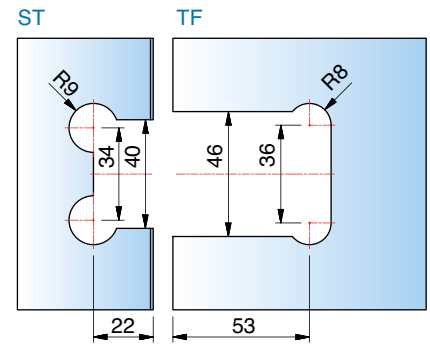

ST = side panel I TF = door panel I W = wall



c-edge

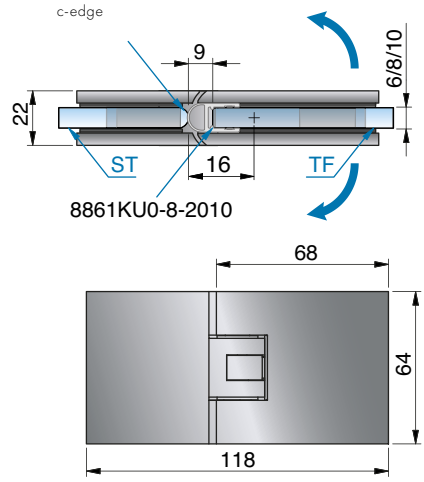

glass processing for 8 mm
with sealing profile 8861KU0-8-2010

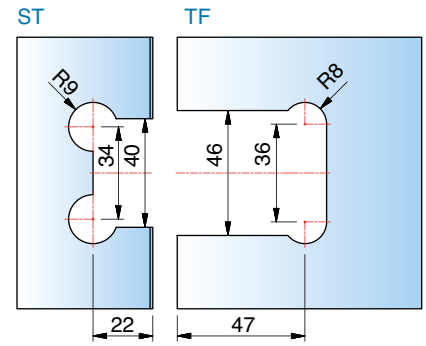



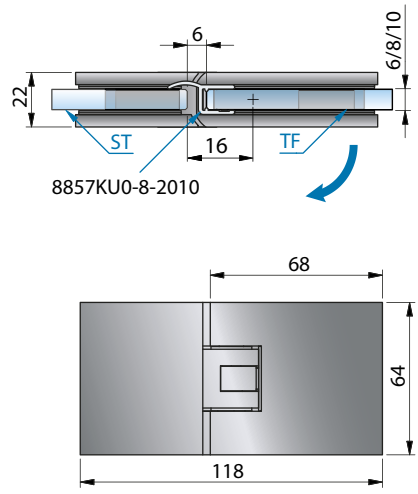

glass processing for 8 mm
with sealing profile 8857KU0-8-2010

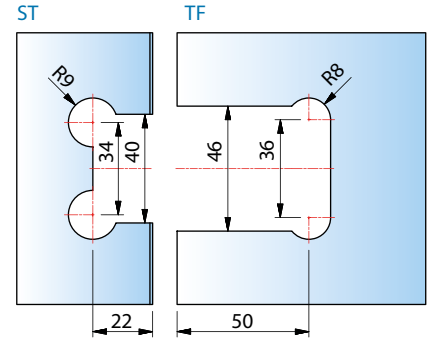

article no.	finish	glass thickness	article description	features	pu/pieces
8132ZN5	gloss chrome	6/8/10 mm	shower swing door hinge FLAMEA+ glass-glass 135°	opens in- and outwards 90° depending on sealing profile, with adjustable closed position, concealed screws with cover plate When using the hinges for 6 or 10 mm glass thickness, please use the insert set Art. No. HZ-SET4 per hinge free of charge.	1/2
8132ZN1	matt chrome				
8132ZN10	gloss nickel				
8132ZNPVD22	stainless steel optic				
8132ZNPVD20	gold optic				
8132ZNPVD35	black matt				
8132ZN135	deep black matt				
8132ZN134	white matt				

shower swing door hinge - FLAMEA+

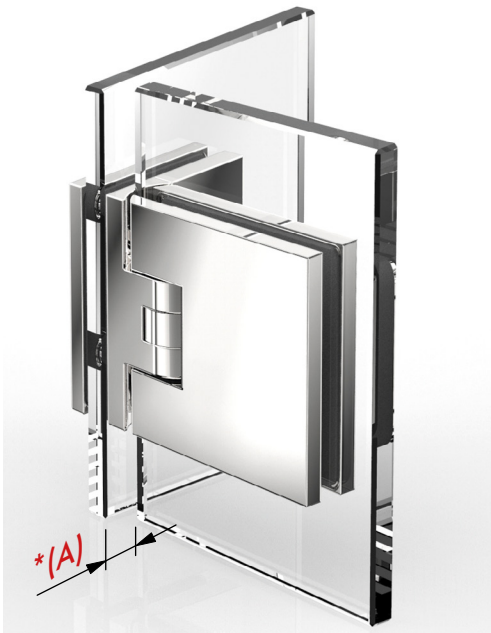

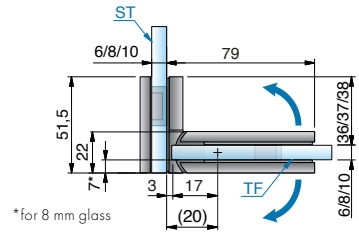

*for 8 mm glass

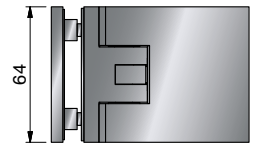

glass processing for 8 mm
without sealing profile

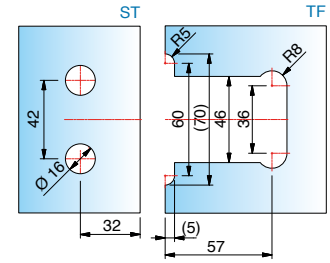



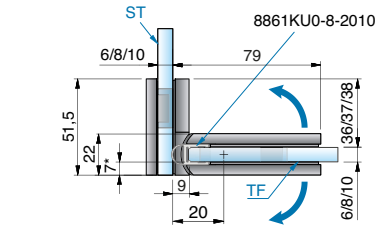

*for 8 mm glass

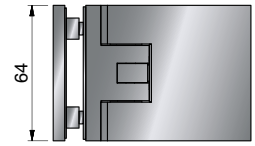

glass processing for 8 mm
with sealing profile 8861KU0-8-2010

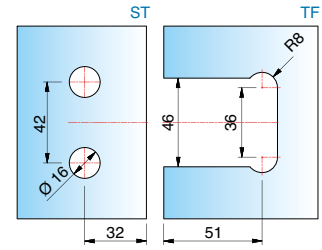

article no.	finish	glass thickness	article description	features	pu/pieces
8136ZN5	gloss chrome	6/8/10 mm	shower swing door hinge FLAMEA+ glass-glass 90°	opens in- and outwards 90°, with adjustable closed position, concealed screws with cover plate *offset dimension (A) on the side panel can be determined by the installer When using the hinges for 6 or 10 mm glass thickness, please use the insert set Art. No. HZ-SET4 per hinge free of charge.	1/2
8136ZN1	matt chrome				
8136ZN10	gloss nickel				
8136ZNPVD22	stainless steel optic				
8136ZNPVD20	gold optic				
8136ZNPVD35	black matt				
8136ZN135	deep black matt				
8136ZN134	white mat				

ST = side panel I TF = door panel I W = wall



- for glass-glass 90°, only drilled holes are required in the side panel, so that the glass door panel is set inwards and the overhang (A) can be determined by the installer.

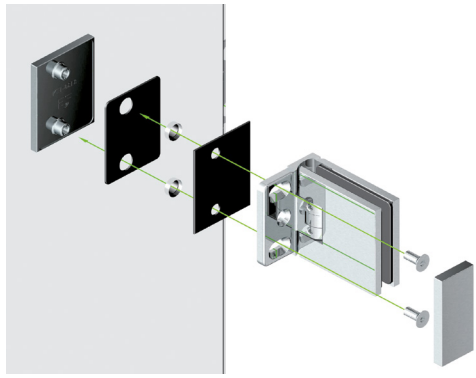



angle bracket - FLAMEA+



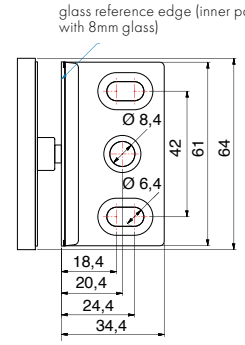

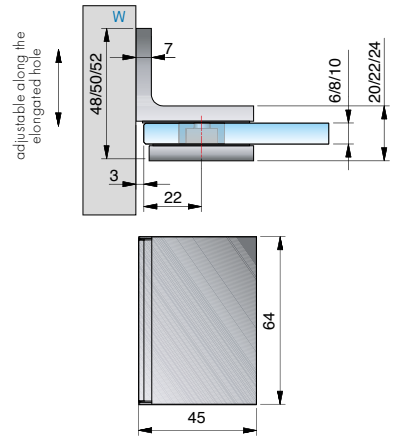

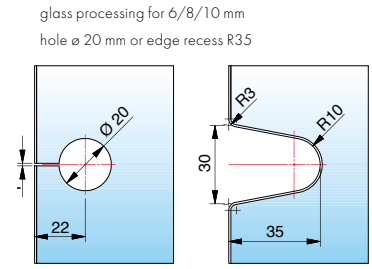

article no.	finish	glass thickness	article description	features	pu/pieces
8194ZN5	gloss chrome	6/8/10 mm	angle bracket FLAMEA+ glass-wall 90°	adjustable anlong the oblong hole, concealed screws	1/2
8194ZN1	matt chrome				
8194ZN10	gloss nickel				
8194ZNPVD22	stainless steel optic				
8194ZNPVD20	gold optic				
8194ZNPVD35	black matt				
8194ZN135	deep black matt				
8194ZN134	white matt				



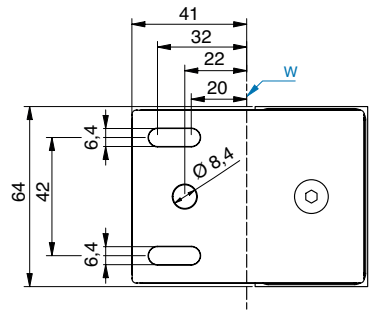

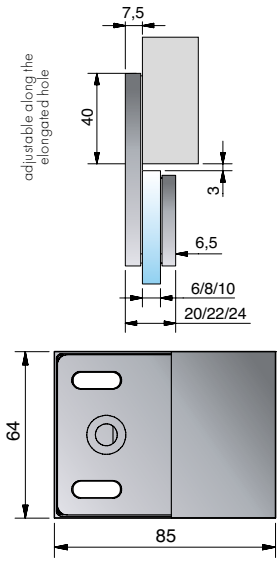

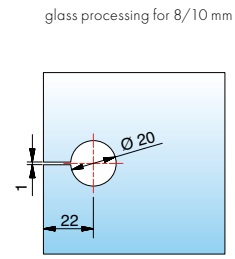

article no.	finish	glass thickness	article description	features	pu/pieces
8193ZN5	gloss chrome	6/8/10 mm	angle bracket FLAMEA+ glass-wall 180°	adjustable anlong the oblong hole, concealed screws	1/2
8193ZN1	matt chrome				
8193ZN10	gloss nickel				
8193ZNPVD22	stainless steel optic				
8193ZNPVD20	gold optic				
8193ZNPVD35	black matt				



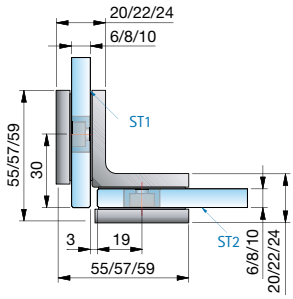

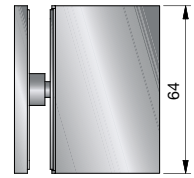

glass processing for 8 mm

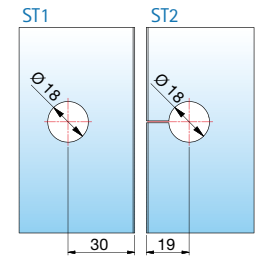

article no.	finish	glass thickness	article description	features	pu/pieces
8196ZN5	gloss chrome	6/8/10 mm	angle bracket FLAMEA+ glass-glass 90°	concealed screws	1/2
8196ZN1	matt chrome				
8196ZN10	gloss nickel				
8196ZNPVD22	stainless steel optic				
8196ZNPVD20	gold optic				
8196ZNPVD35	black matt				
8196ZN135	deep black matt				

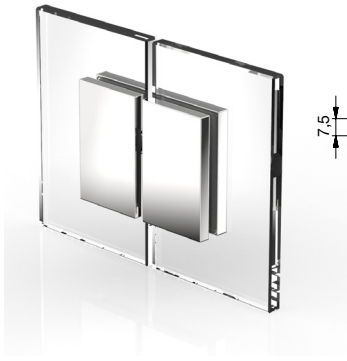

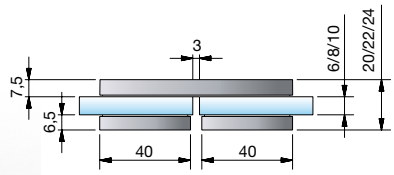

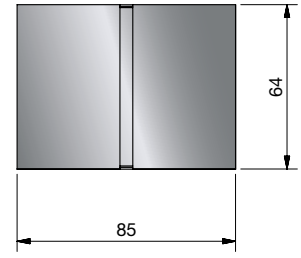

glass processing for 8/10 mm

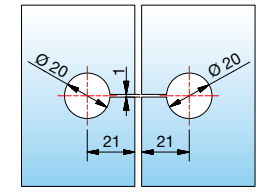

article no.	finish	glass thickness	article description	features	pu/pieces
8191ZN5	gloss chrome	6/8/10 mm	angle bracket FLAMEA+ glass-glass 180°	concealed screws	1/2
8191ZN1	matt chrome				
8191ZN10	gloss nickel				
8191ZNPVD22	stainless steel optic				
8191ZNPVD20	gold optic				
8191ZNPVD35	black matt				

ST = side panel I TF = door panel I W = wall

angle bracket - FLAMEA+



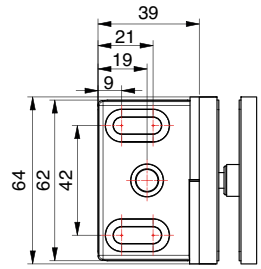

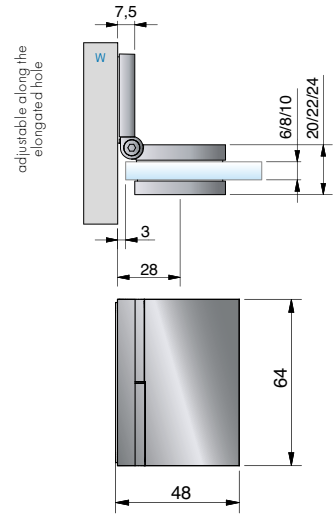

glass processing for 8 mm glass

with other angles the miter angle and/or hole distance is changing according to table.

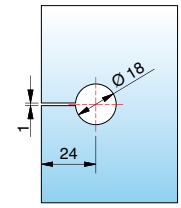

article no.	finish	glass thickness	article description	features	pu/pieces
8199ZN5	gloss chrome	6/8/10 mm	angle bracket FLAMEA+ glass-wall 90°	degree of angle is fully adjustable between 60° and 100°, concealed screws	1/2
8199ZN1	matt chrome				
8199ZN10	gloss nickel				
8199ZNPVD22	stainless steel optic				
8199ZNPVD20	gold optic				
8199ZNPVD35	black matt				

miter angle and hole distances for **8199ZN**

corner	hole distances from glass edge	miter angle	remarks
60°	33 mm	30°	-
65°	31 mm	25°	-
70°	30 mm	20°	-
75°	28 mm	15°	-
80°	27 mm	10°	-
85°	26 mm	5°	-
90°	24 mm	without miter angle	hole slotted
95°	23 mm	5°	hole slotted
100°	22 mm	10°	hole slotted



ST = side panel I TF = door panel I W = wall



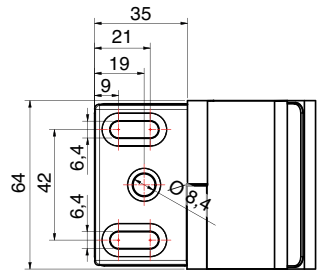

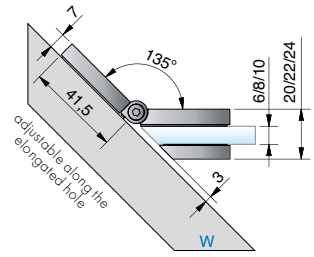

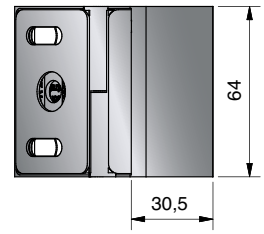

glass processing for 8 mm glass

with other angles the miter angle and/or hole distance is changing according to table.

edge recess R35

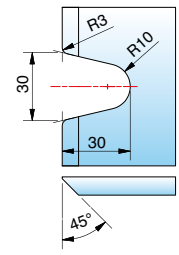

from 135°

hole dimension at 100°

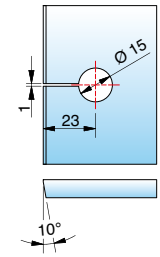

from 100° - 125°

article no.	finish	glass thickness	article description	features	pu/pieces
8189ZN5	gloss chrome	6/8/10 mm	angle bracket FLAMEA+ glass-wall	degree of angle is fully adjustable between 100° and 135°, concealed screws	1/2
8189ZN1	matt chrome				
8189ZN10	gloss nickel				
8189ZNPVD22	stainless steel optic				
8189ZNPVD20	gold optic				
8189ZNPVD35	black matt				

miter angle and hole distances for **8198ZN**

corner	hole distances from glass edge	miter angle	remarks
100°	23 mm	10°	hole slotted
105°	23 mm	15°	hole slotted
110°	22 mm	20°	hole slotted
115°	22 mm	25°	hole slotted
120°	21 mm	30°	hole slotted
125°	21 mm	35°	hole slotted
130°	-	40°	edge recess R30
135°	-	45°	edge recess R30

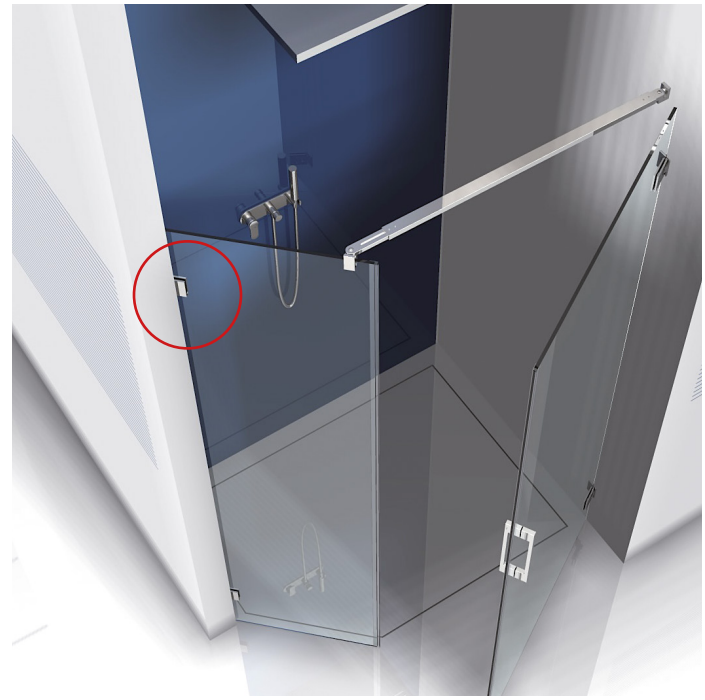

ST = side panel I TF = door panel I W = wall

angle bracket - FLAMEA+



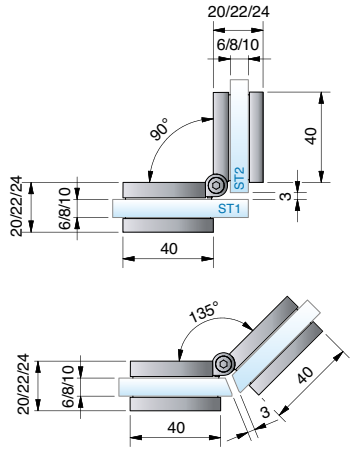

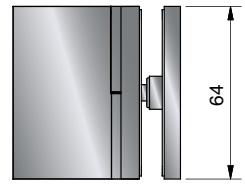

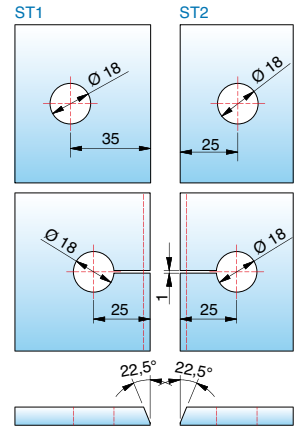

glass processing for 8 mm glass

with other angles the miter angle and/or hole distance is changing according to table.

article no.	finish	glass thickness	article description	features	pu/pieces
8198ZN5	gloss chrome	6/8/10 mm	angle bracket FLAMEA+ glass-glass	degree of angle is fully adjustable between 80° and 180°, concealed screws	1/2
8198ZN1	matt chrome				
8198ZN10	gloss nickel				
8198ZNPVD22	stainless steel optic				
8198ZNPVD20	gold optic				
8198ZNPVD35	black matt				

miter angle and hole distances for **8198ZN**

corner	hole distances from glass edge	miter angle	remarks
80°	36 mm	50°	-
85°	35 mm	47,5°	-
90°	33 mm	45°	-
95°	32 mm	42,5°	-
100°	31 mm	40°	hole slotted
105°	30 mm	37,5°	hole slotted
110°	29 mm	35°	hole slotted
115°	28 mm	32,5°	hole slotted
120°	28 mm	30°	hole slotted
125°	27 mm	27,5°	hole slotted
130°	26 mm	25°	hole slotted
135°	25 mm	22,5°	hole slotted
140°	25 mm	20°	hole slotted
145°	24 mm	17,5°	hole slotted
150°	23 mm	15°	hole slotted
155°	23 mm	12,5°	hole slotted
160	22 mm	10°	hole slotted
165°	22 mm	7,5°	hole slotted
170°	21 mm	5°	hole slotted
175°	20 mm	0°	hole slotted
180°	20 mm	0°	hole slotted

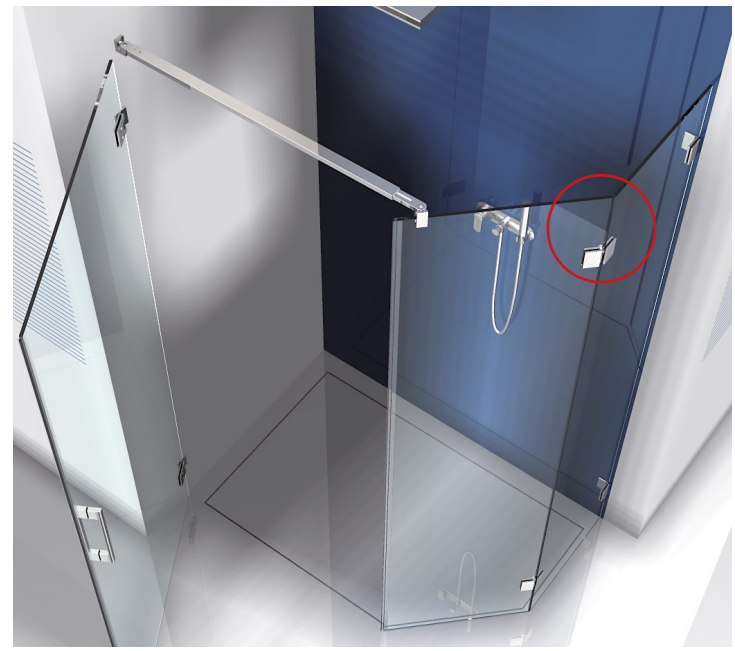



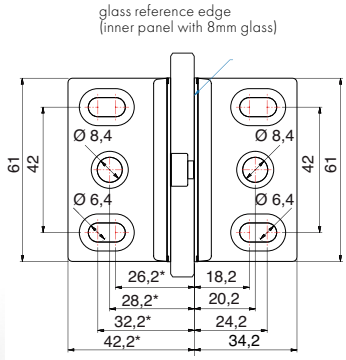

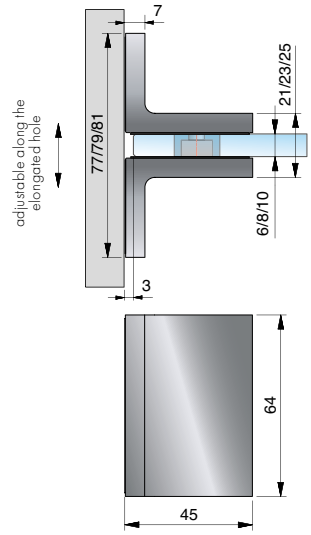

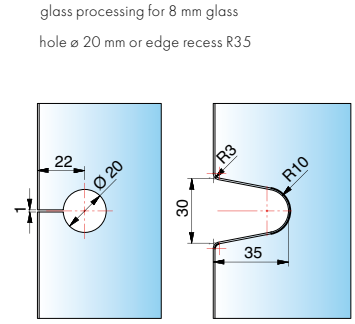

article no.	finish	glass thickness	article description	features	pu/pieces
8195ZN5	gloss chrome	6/8/10 mm	angle bracket FLAMEA+ wall-glass-wall 90°	double-sided fastening brackets, concealed screws	1/2
8195ZN1	matt chrome				
8195ZN10	gloss nickel				
8195ZNPVD22	stainless steel optic				
8195ZNPVD20	gold optic				
8195ZNPVD35	black matt				



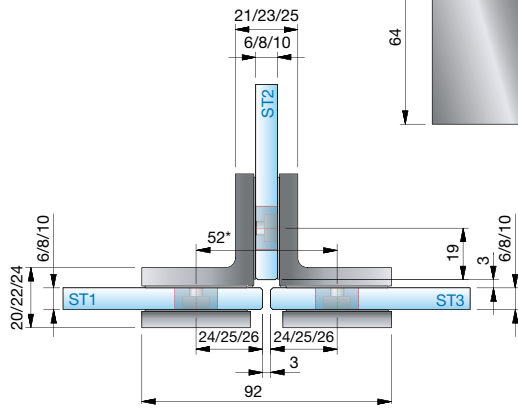

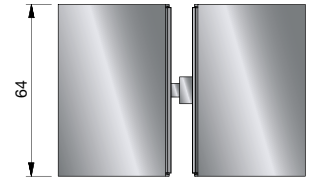

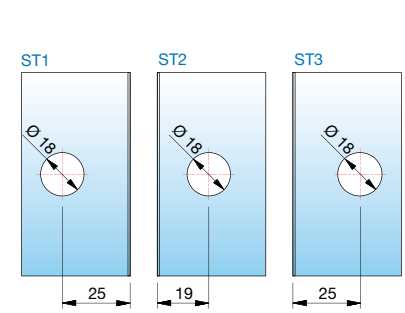

article no.	finish	glass thickness	article description	features	pu/pieces
8197ZN5	gloss chrome	6/8/10 mm	angle bracket FLAMEA+ glass-glass 90°	concealed screws	1/2
8197ZN1	matt chrome				
8197ZN10	gloss nickel				
8197ZNPVD22	stainless steel optic				
8197ZNPVD20	gold optic				
8197ZNPVD35	black matt				

ST = side panel I TF = door panel I W = wall

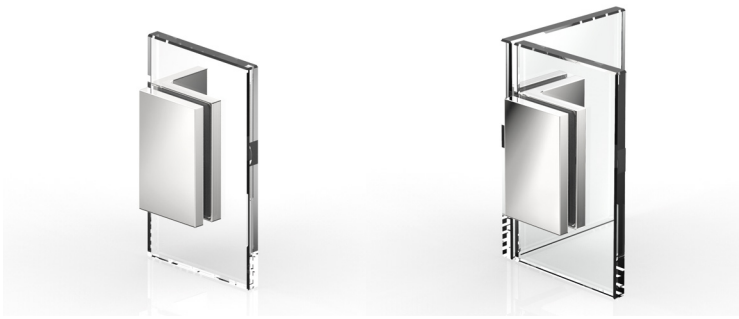

corresponding angle brackets

for FLAMEA+ Sauna can be found on page 97.

MADE IN GERMANY

Black EDITION

Gold EDITION

suited for saunas SN



sauna swing door hinge FLAMEA+



FLAMEA+ SAUNA – relentlessly and heat-resistant

With the sauna fitting FLAMEA+-SN from Pauli + Sohn, individual wellness oases can be planned - from the small private sauna up to the spacious sauna landscape. In-house tests confirm the optimal functionality when the prescribed door dimensions and their weights as well as the maximum permissible ambient temperature of 100° C are met.

- 90° swing door hinge
- minimized gap distances for the installation in a sauna
- self-closing during the last 15 - 20°
- centered pivot-point, therefore usage as swing door possible
- fully adjustable closed position
- concealed screws

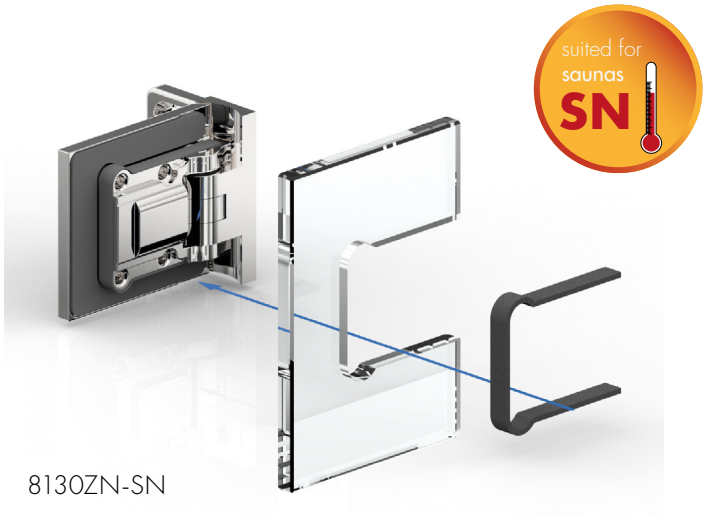

8130ZN-SN

- concealed screws

- max. temperature in height of the upper hinge (on the surface) 80°C (corresponds a general sauna heat adjustment temperature of 100°C)
- sauna pendulum hinges and glass are to be protected against damage. therefore, when planning sauna situations, take into account that the door panels are not over pressed during opening (maximum 90 °).





care instructions

The sauna hinges are to be cleaned only using warm water and a soft nonabrasive cloth for cleaning and drying. Sharp, aggressive, abrasive, alkaline or chlorine containing cleaners may not be used. While cleaning, the door must be held with one hand to prevent over opening.

For heavier stains (lime, grease, soap) we recommend our special cleaning agent "Gentle Care" for hardware - see page 331.

The door must be held firmly with one hand during cleaning to prevent over opening.

Please note that the instruction manual can be found on page 382.

sauna swing door hinge - FLAMEA+ SN



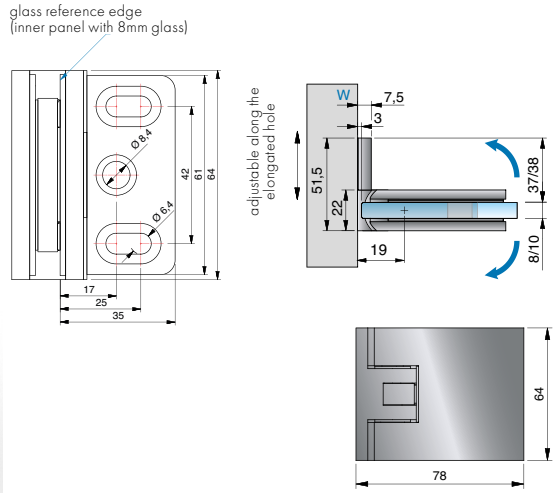

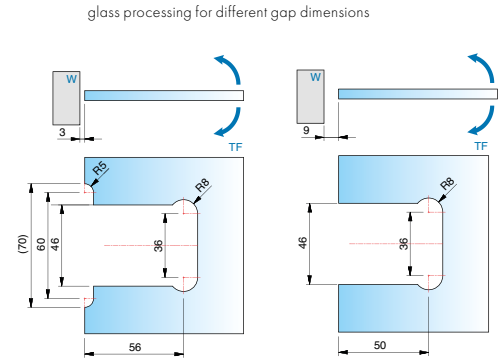

article no.	finish	glass thickness	article description	features	pu/pieces
8130ZN5-SN	gloss chrome	8/10 mm	sauna swing door hinge FLAMEA+ glass-wall 90°, max. door width 800 mm	opens in- and outwards 90°, with adjustable closed position, adjustable along the oblong hole, one sided mounting plate, concealed screws When using the hinges for 10 mm glass thickness, please use the insert set Art. No. HX-SET3 per hinge free of charge.	1/2
8130ZN1-SN	matt chrome				
8130ZN10-SN	gloss nickel				
8130ZNPVD22-SN	stainless steel optic				
8130ZNPVD20-SN	gold optic				
8130ZNPVD35-SN	black matt				



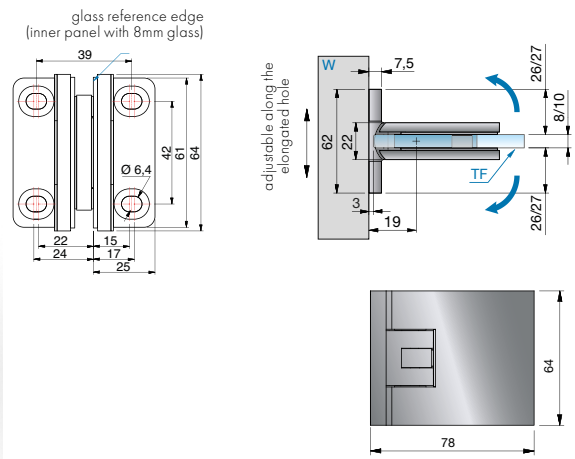

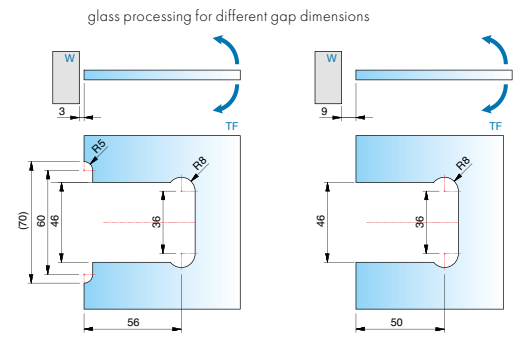

article no.	finish	glass thickness	article description	features	pu/pieces
8134ZN5-SN	gloss chrome	8/10 mm	sauna swing door hinge FLAMEA+ glass-wall 90°, max. door width 900 mm	opens in- and outwards 90°, with adjustable closed position, adjustable along the oblong hole, one sided mounting plate, concealed screws When using the hinges for 10 mm glass thickness, please use the insert set Art. No. HX-SET3 per hinge free of charge.	1/2
8134ZN1-SN	matt chrome				
8134ZN10-SN	gloss nickel				
8134ZNPVD22-SN	stainless steel optic				
8134ZNPVD20-SN	gold optic				
8134ZNPVD35-SN	black matt				



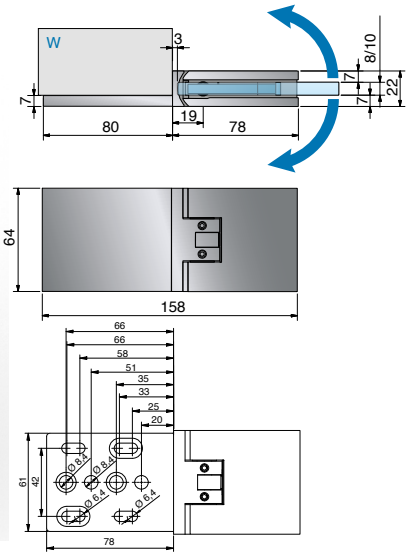

glass processing for different gap dimensions

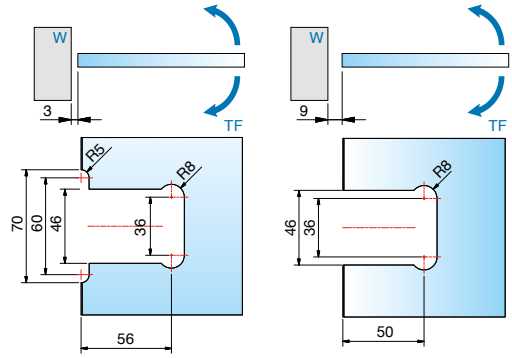

article no.	finish	glass thickness	article description	features	pu/pieces
8133ZN5-SN	gloss chrome	8/10 mm	sauna swing door hinge FLAMEA+, glass-wall 180°, max. door width 900 mm load capacity (2 hinges): 36 kg with max. 900 x 2000 x 8 mm	opens in- and outwards 90°, with adjustable closed position, adjustable along the oblong hole, concealed screws When using the hinges for 10 mm glass thickness, please use the insert set Art. No. HX-SET3 per hinge free of charge.	1/2
8133ZN1-SN	matt chrome				
8133ZN10-SN	gloss nickel				
8133ZNPVD22-SN	stainless steel optic				
8133ZNPVD20-SN	gold optic				
8133ZNPVD35-SN	black matt				



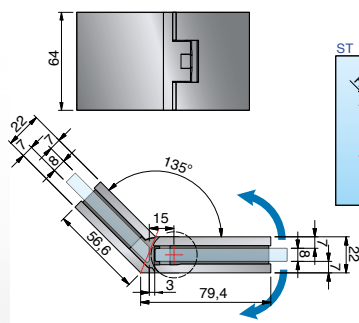

glass processing for different gap dimensions

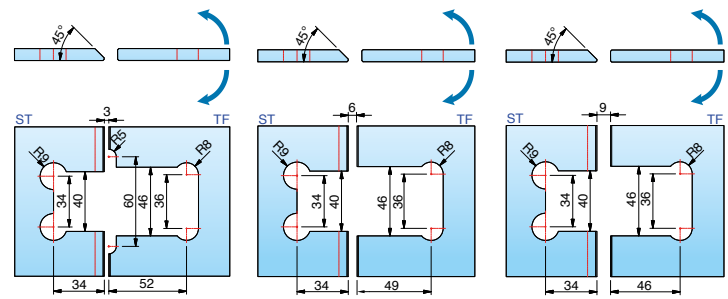

article no.	finish	glass thickness	article description	features	pu/pieces
8131ZN5-SN	gloss chrome	8/10 mm	sauna swing door hinge FLAMEA+, glass-glass 135°, max. door width 750 mm load capacity (2 hinges): 30 kg with max. 750 x 2000 x 8 mm	opens in- and outwards 90°, with adjustable closed position, adjustable along the oblong hole, concealed screws When using the hinges for 10 mm glass thickness, please use the insert set Art. No. HX-SET4 per hinge free of charge.	1/2
8131ZN1-SN	matt chrome				
8131ZN10-SN	gloss nickel				
8131ZNPVD22-SN	stainless steel optic				
8131ZNPVD20-SN	gold optic				
8131ZNPVD35-SN	black matt				

sauna swing door hinge - FLAMEA+ SN



glass processing for different gap dimensions

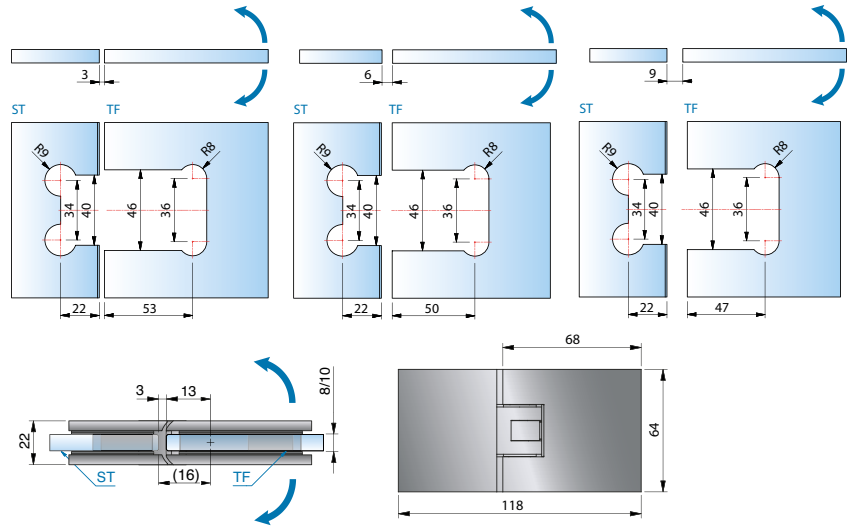

article no.	finish	glass thickness	article description	features	pu/pieces
8132ZN5-SN	gloss chrome	8/10 mm	sauna swing door hinge FLAMEA+, glass-glass 180°, max. door width 750 mm	opens in- and outwards 90°, with adjustable closed position, adjustable along the oblong hole, concealed screws the insert (8132-10KU-SN) which prevents the door leaf from sliding-down is included free of charge. When using the hinges for 10 mm glass thickness, please use the insert set Art. No. HX-SET4 per hinge free of charge.	1/2
8132ZN1-SN	matt chrome				
8132ZN10-SN	gloss nickel				
8132ZNPVD22-SN	stainless steel optic				
8132ZNPVD20-SN	gold optic				
8132ZNPVD35-SN	black matt				

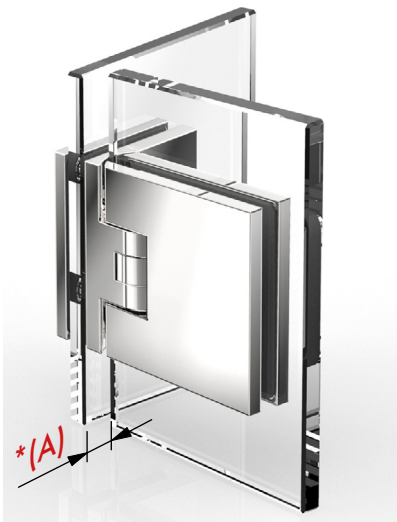

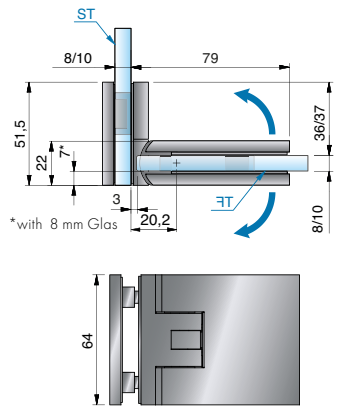

glass processing for different gap dimensions
*the offset dimension can be determined by the installer.

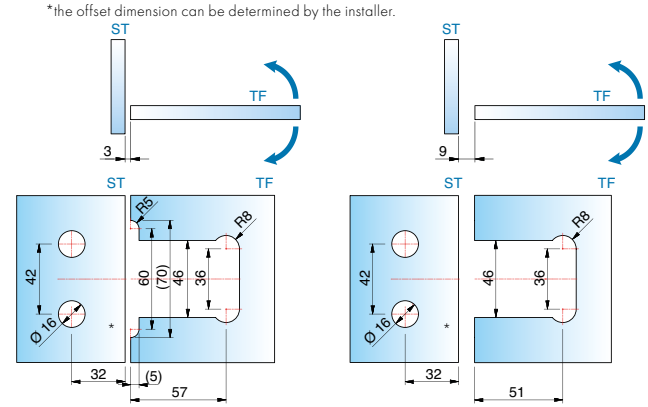

article no.	finish	glass thickness	article description	features	pu/pieces
8136ZN5-SN	gloss chrome	8/10 mm	sauna swing door hinge FLAMEA+, glass-glass 90°, max. door width 800 mm	opens in- and outwards 90°, with adjustable closed position, adjustable along the oblong hole, concealed screws * offset dimensions (A) on the side panel can be determined by the installer When using the hinges for 10 mm glass thickness, please use the insert set Art. No. HX-SET3 per hinge free of charge.	1/2
8136ZN1-SN	matt chrome				
8136ZN10-SN	gloss nickel				
8136ZNPVD22-SN	stainless steel optic				
8136ZNPVD20-SN	gold optic				
8136ZNPVD35-SN	black matt				



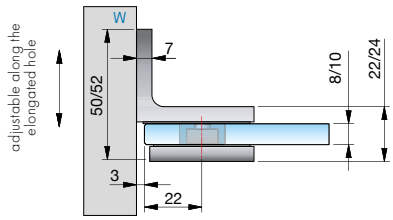

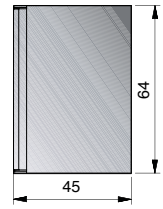

glass processing for 8/10 mm
hole ø 20 mm or edge recess R35

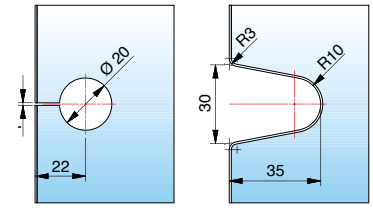

article no.	finish	glass thickness	article description	features	pu/pieces
8194ZN5-SN	gloss chrome	8/10 mm	sauna angle bracket FLAMEA+ glass-wall 90°	adjustable anlong the oblong hole, concealed screws with cover plate	1/2
8194ZN1-SN	matt chrome				
8194ZN10-SN	gloss nickel				
8194ZNPVD22-SN	stainless steel optic				
8194ZNPVD20-SN	gold optic				
8194ZNPVD35-SN	black matt				



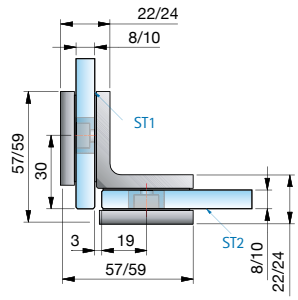

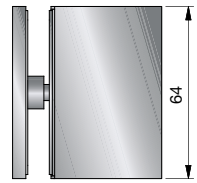

glass processing for 8 mm

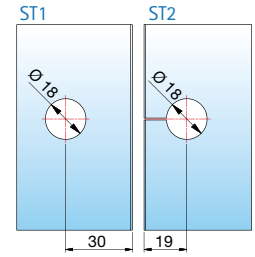

article no.	finish	glass thickness	article description	features	pu/pieces
8196ZN5-SN	gloss chrome	8/10 mm	sauna angle bracket FLAMEA+ glass-glass 90°	concealed screws with cover plate	1/2
8196ZN1-SN	matt chrome				
8196ZN10-SN	gloss nickel				
8196ZNPVD22-SN	stainless steel optic				
8196ZNPVD20-SN	gold optic				
8196ZNPVD35-SN	black matt				

TF = door panel I W = wall

sauna swing door hinge - FLAMEA+ SN

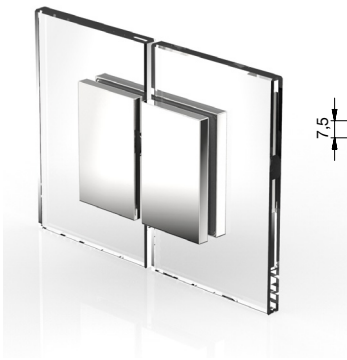

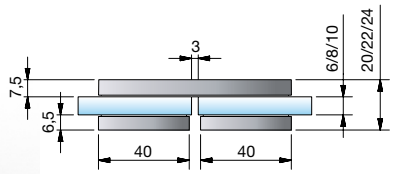

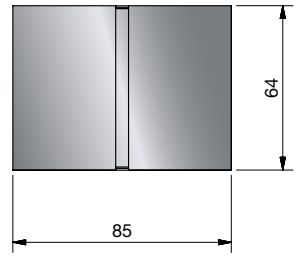

glass processing for 8/10 mm

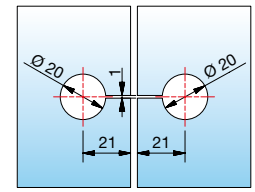

article no.	finish	glass thickness	article description	features	pu/pieces
8191ZN5-SN	gloss chrome	8/10 mm	sauna angle bracket FLAMEA+ glass-glass 90°	concealed screws with cover plate	1/2
8191ZN1-SN	matt chrome				
8191ZNPVD22-SN	stainless steel optic				



article no.	article description	pu/pieces
8132-10KU-SN	filler piece for glass cutout of the side panel mounting for	1/1
8132-3EPDM	8131ZN-SN and 8132ZN-SN (2 pieces per hinge included).	

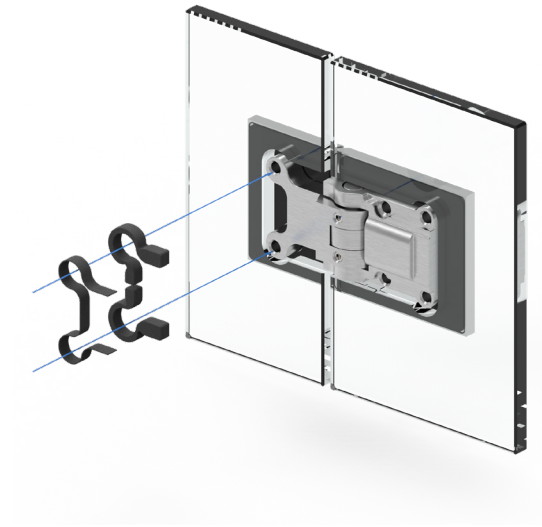



article no.	article description	pu/pieces
8878FKM-1	insert for glass recess, 300x8x1 mm	1/1
8878FKM-2	insert for glass recess, 300x8x2 mm	

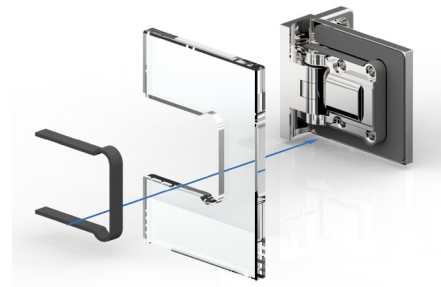

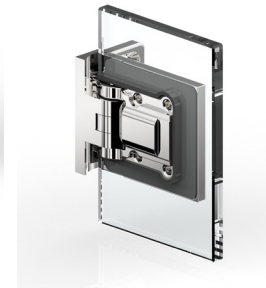

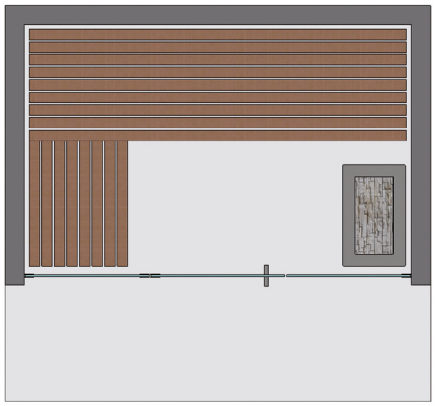

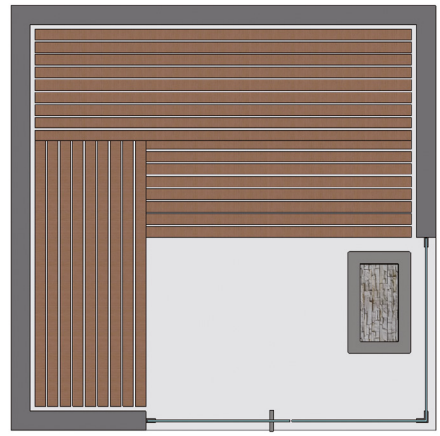

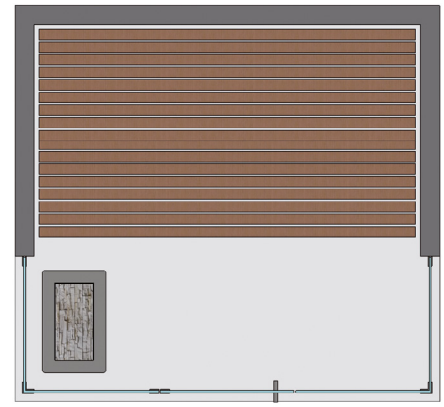

- many different installation situations are possible.
  when planning the system, make sure that the door panels are not to be over-opened (max.90°)!
  together, we can plan tailor-made solutions. - contact us!



8130ZN-SN
- max. door width 800 mm
- loading capacity (2 hinges): 32 kg (corresponding to a glass door with the dimension 800 x 2000 mm and a glass thickness of 8 mm)



8134ZN-SN
- max. door width 900 mm
- loading capacity (2 hinges): 36 kg (corresponding to a glass door with the dimension 900 x 2000 mm and a glass thickness of 8 mm)



8133ZN-SN
- max. door width 750 mm
- loading capacity (2 hinges): 30 kg (corresponding to a glass door with the dimension 750 x 2000 mm and a glass thickness of 8 mm)

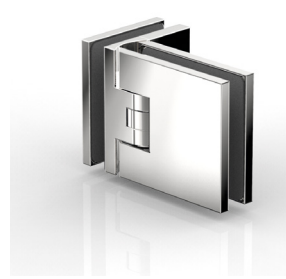

8136ZN-SN
- max. door width 800 mm
- loading capacity (2 hinges): 32 kg (corresponding to a glass door with the dimension 800 x 2000 mm and a glass thickness of 8 mm)



8132ZN-SN
- max. door width 750 mm
- loading capacity (2 hinges): 30 kg (corresponding to a glass door with the dimension 750 x 2000 mm and a glass thickness of 8 mm)



8131ZN-SN
- max. door width 750 mm
- loading capacity (2 hinges): 30 kg (corresponding to a glass door with the dimension 750 x 2000 mm and a glass thickness of 8 mm)



corresponding angle brackets

for FLAMEA can be found on page 168.

our service for you!

On **www.pauli.de**, you can find many different measurement sheets for all standard installations.

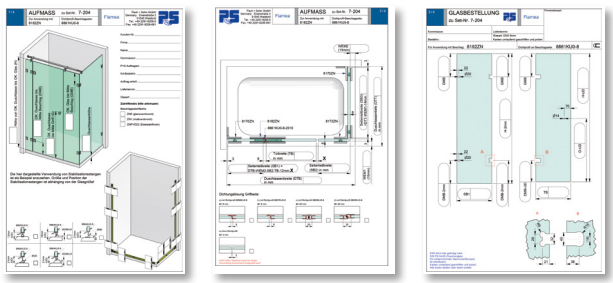

MADE IN GERMANY

Black EDITION



shower swing door hinge FLAMEA



FLAMEA - consequent: formal-aesthetic

MADE IN GERMANY

Sometimes little things make a big difference. the rectangular shower swing door hinge FLAMEA is for its size of 71 x 56 mm for a glass-wall hinge and 111 x 56 mm for a glass-glass hinge extremely compact and thus a particular unobtrusive solution. The fully adjustable closed position and the ability to work without a sealing profile ensures the perfect adaption to different situations.

- 90° shower swing door hinge
- self-closing during the last 15 - 20°
- centered pivot-point, therefore usage as swing door possible
- fully adjustable closed position
- load capacity (2 hinges): 36 kg
  corresponding to a glass door with the dimension 900 x 2000 mm and a glass thickness of 8 mm
- optimized for application without using sealing profiles
- the durability of the hardware has been tested internally according to DIN EN 14428:2015 5.5.







The closed position can be fully adjusted as often as needed. Due to the fully adjustable closed-position, the hinges can be mounted much faster, even on walls that are not aligned to each other.

general remarks:

- depending on the loading transfer to the wall, please also take the small mounting plate into consideration.
- perpendicular mounting of the shower door hinge on solid surfaces

Please note that the instruction manual can be found on page 382.

shower swing door hinge - FLAMEA



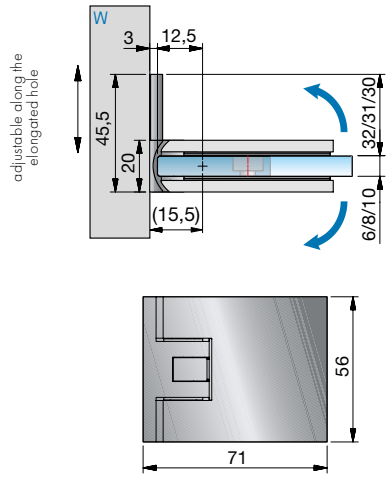

glass processing for 8 mm
without sealing profile

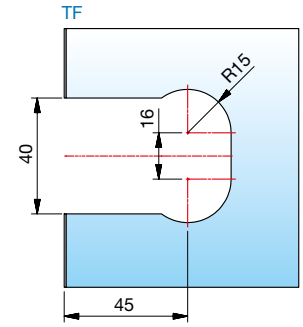



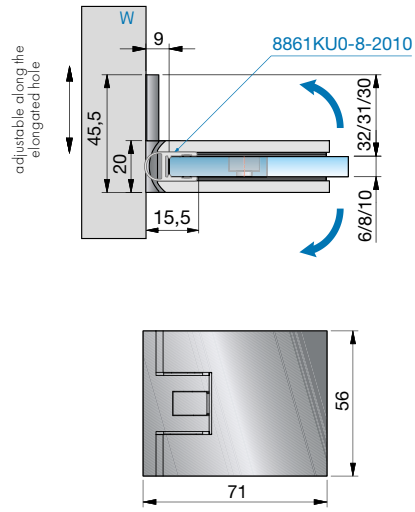

glass processing for 8 mm
with sealing profile 8861KU0-8-2010

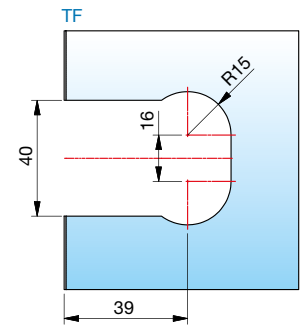

article no.	finish	glass thickness	article description	features	pu/pieces
8180ZN5	gloss chrome	6/8/10 mm	shower swing door hinge FLAMEA glass-wall 90°	opens in- and outwards 90°, with adjustable closed position, adjustable anlong the oblong hole, single sided mounting plate shim plates in thicknesses 2/3/5/10 mm can be found on page 375.	1/2
8180ZN1	matt chrome				
8180ZNPVD22	stainless steel optic				
8180ZNPVD35	black matt				
8180ZN135	deep black matt				

When using the hinges for 6 or 10 mm glass thickness, please use the insert set Art. No. HZ-SET1 per hinge free of charge.

TF = door panel I W = wall

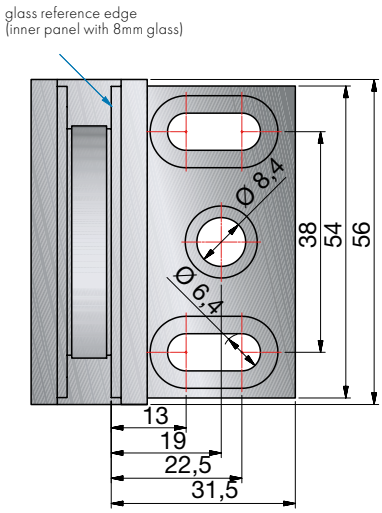



- by positioning the glass within the shower area, a natural splash guard is created.



shower swing door hinge - FLAMEA



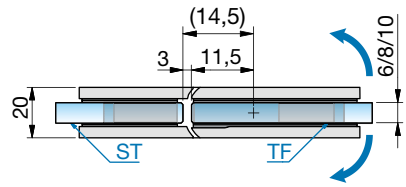

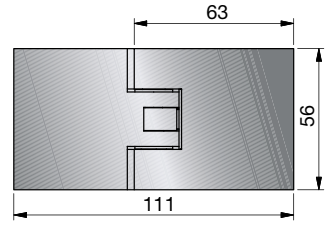

glass processing for 8 mm
without sealing profile

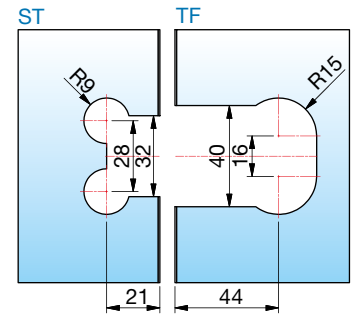

When using the hinges for 6 or 10 mm glass thickness, please use the insert set Art. No. HZ-SET2 per hinge free of charge.



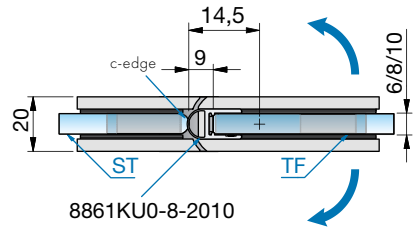

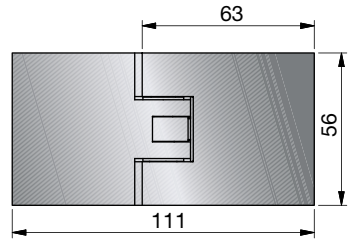

glass processing for 8 mm
with sealing profile 8857KU0-8-2010

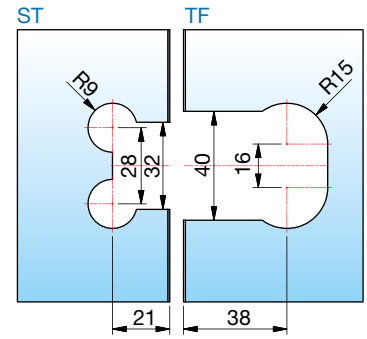



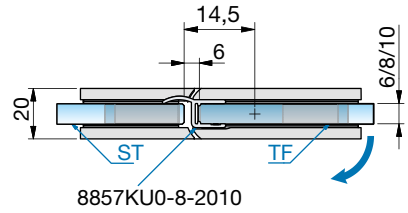

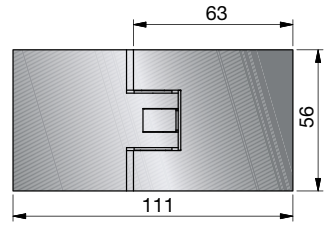

glass processing for 8 mm
with sealing profile 8861KU0-8-2010

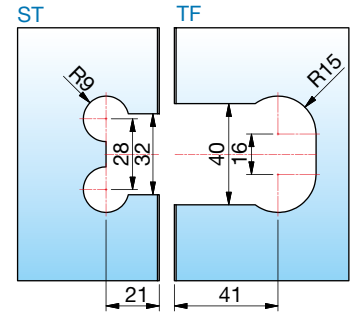

article no.	finish	glass thickness	article description	features	pu/pieces
8182ZN5	gloss chrome	6/8/10 mm	shower swing door hinge FLAMEA glass-glass 180°	depending on the used seal profile, opens in- and outwards 90°, with adjustable closed position	1/2
8182ZN1	matt chrome				
8182ZNPVD22	stainless steel optic				
8182ZNPVD35	black matt				
8182ZN135	deep black matt				

TF = door panel I W = wall



corresponding angle brackets

for FARDELLO can be found on page 168.

our service for you!

On **www.pauli.de**, you can find many different measurement sheets for all standard installations.

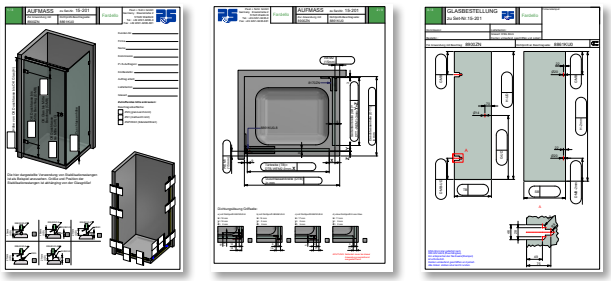

MADE IN GERMANY

Black EDITION



shower swing door hinge FARDELLO



FARDELLO

MADE IN GERMANY

High load-bearing capacity for modern bathroom architecture

The shower swing door hinge FARDELLO is characterized by high load capacity and compact dimensions. With a height of only 56 mm, two hinges can support a maximum of 42 kg. This is made possible by the intelligent construction of the hinge: counter plate and hinge body interlock and are securely fastened together. This ensures more safety. In combination with FLINTER, various folding door systems can also be implemented.

Please note that the instruction manual can be found on page 382.

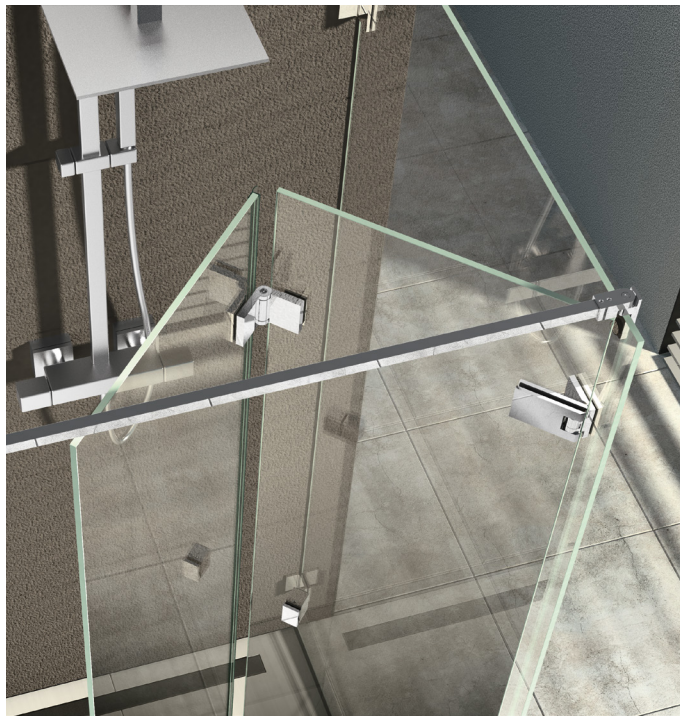

- load capacity (2 hinges): max. permissible weight: 42 kg
- max. door panel width: 1000 mm
- glass thickness: 6/8/10 mm
- swing door hinge: glass-wall / glass-glass
- suitable angle brackets
- optimized for installation without sealing profiles
- minimized gap dimensions
- closed position fully adjustable
- hinge height: 56 mm (like FLAMEA and FLINTER shower door hinge)
- fields of application:
  wellness area, barrier-free bathrooms, public areas
- **intelligent design:**
  fitting body and counter plate engage with interlocking fit and are firmly secured with 4 screws
- the durability of the hardware has been tested internally according to DIN EN 14428:2015 5.5.
- self-closing during the last 15 - 20°

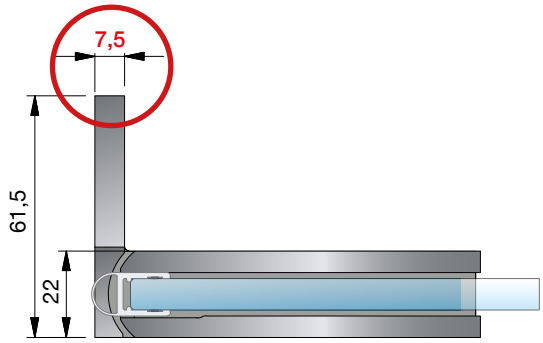

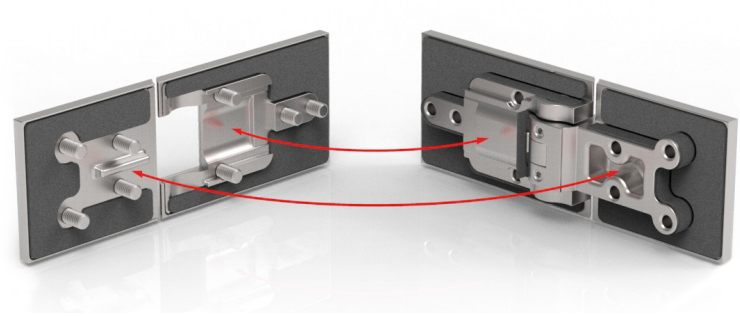

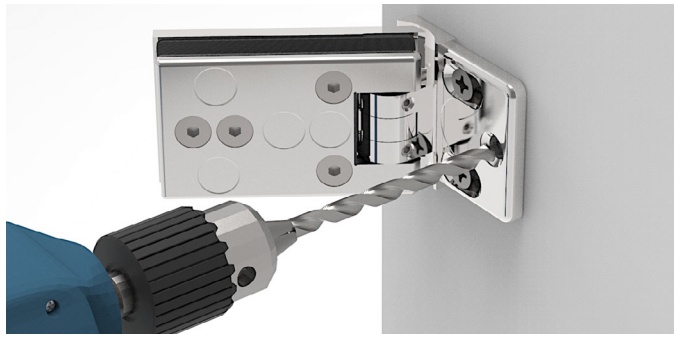

features

- the 7.5 mm thick wall mounting plate offers better load transfer
- the 3rd fixing hole prevents the fittings from warping on the wall
- the shower hinge is designed to allow this hole to be drilled with an 8 mm drill bit while already mounted

shower swing door hinge - FARDELLO



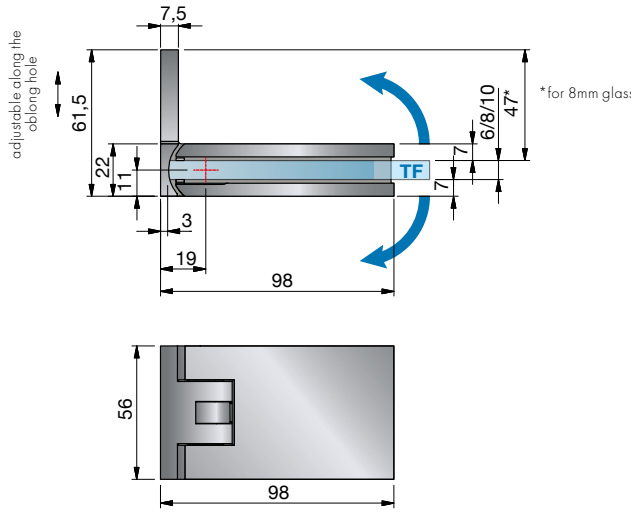

glass processing for 8 mm without sealing profile

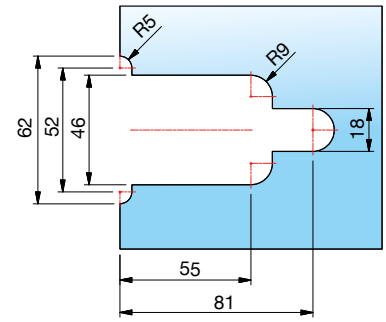



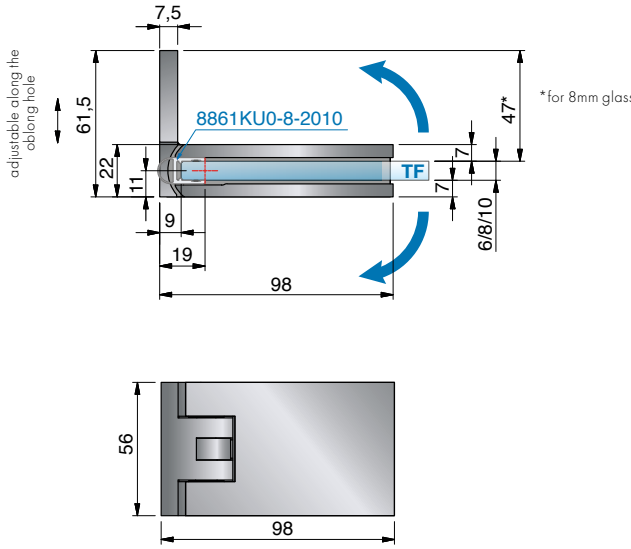

glass processing for 8 mm with sealing profile 8861KU0-8-2010

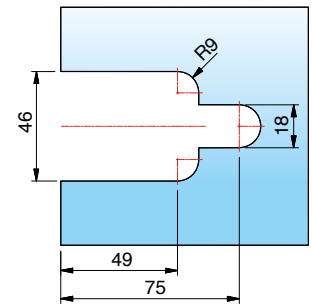

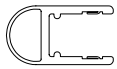

article no.	finish	glass thickness	article description	features	pu/pieces
8900ZN5 8900ZN1 8900ZNPVD22 8900ZNPVD35	gloss chrome matt chrome stainless steel optic black matt	6/8/10 mm	shower swing door hinge FARDELLO glass-wall 90°	90° swing door hinge, with or without sealing profile, concealed screws, wall mount inside with oblong hole adjustment, closed position fully adjustable, self-closing from approx. 15°-20°, seal profile cut in the hinge area.	1/2

When using the hinges for 6 or 10mm glass thickness, please use the insert set Art. No. HZ-SET5 per hinge free of charge.

dimensions wall bracket 8900ZN

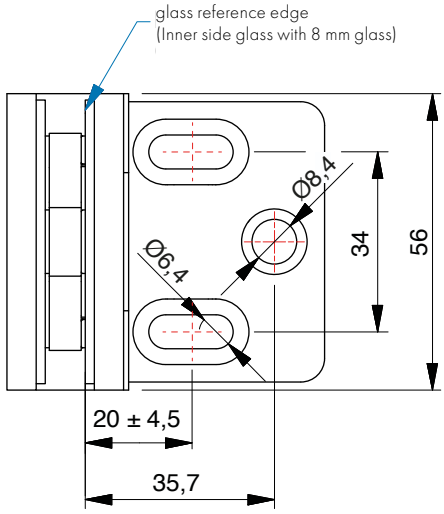



TF = door panel I W = wall

shower swing door hinge - FARDELLO



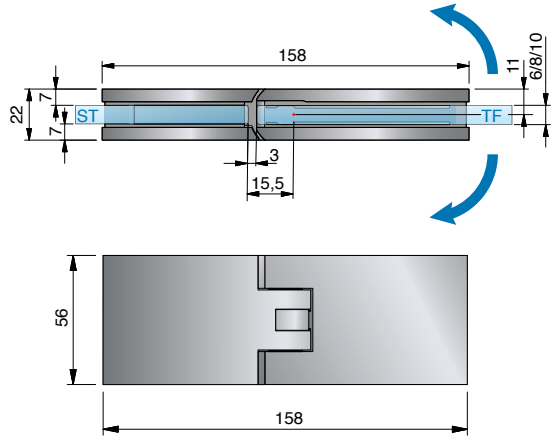

glass processing for 8 mm
without sealing profile

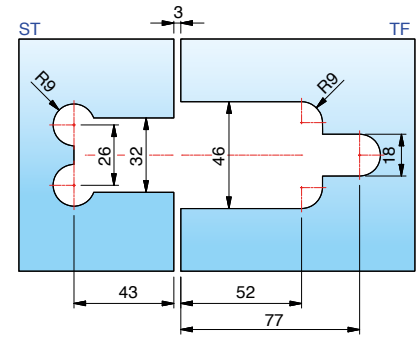



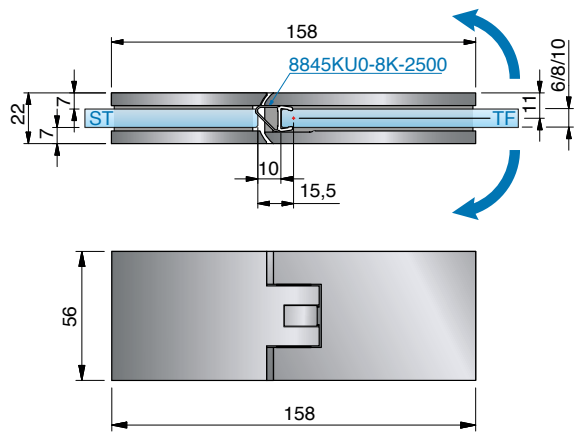

glass processing for 8 mm without
sealing profile

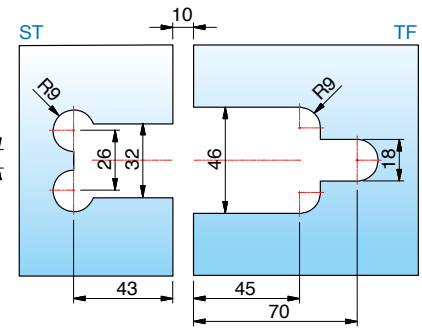



When using the hinges for 6 or 10 mm glass thickness, please use the insert set Art. No. HZ-SET6 per hinge free of charge.



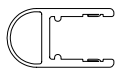

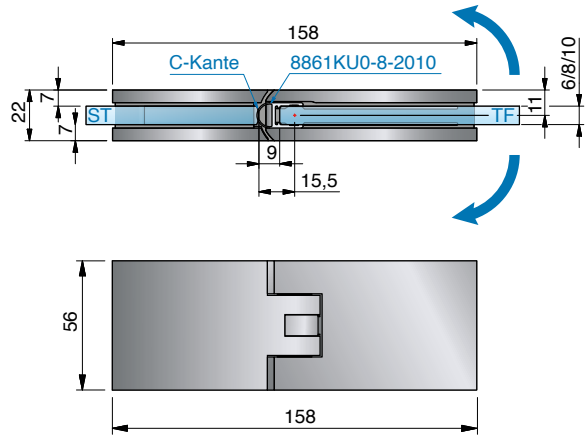

glass processing for 8 mm
with sealing profile 8861KU0-8-2010

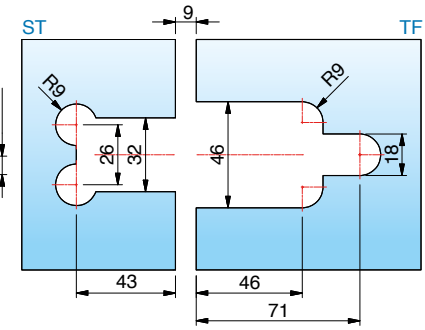



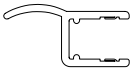

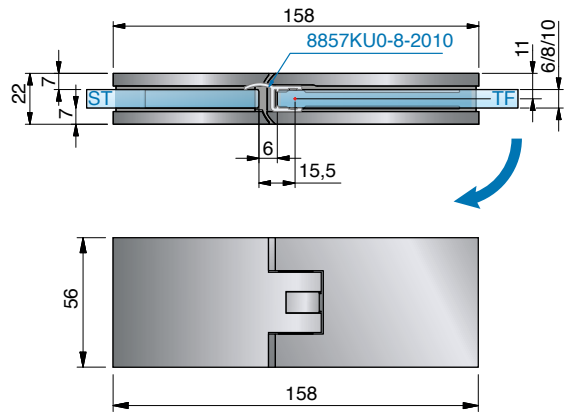

glass processing for 8 mm
with sealing profile 8861KU0-8-2010

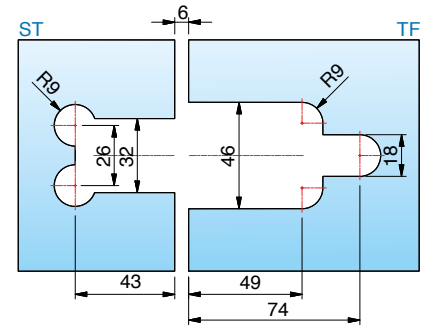

article no.	finish	glass thickness	article description	features	pu/pieces
8901ZN5	gloss chrome	6/8/10 mm	shower swing door hinge FARDELLO glass-glass 180°	90° swing door hinge, with or without sealing profile, concealed screws, closed position fully adjustable, self-closing from approx. 15°-20°, seal profile cut in the hinge area.	1/2
8901ZN1	matt chrome				
8901ZNPVD22	stainless steel optic				
8901ZNPVD35	black matt				

TF = door panel I W = wall

shower swing door hinge - FARDELLO

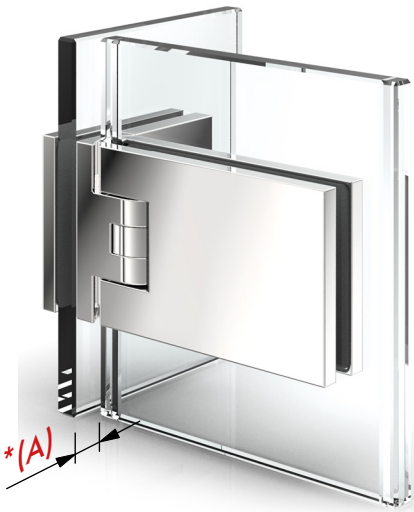

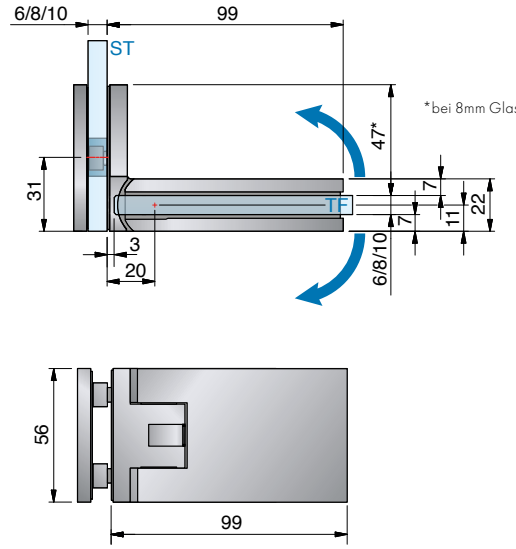

glass processing for 8 mm without sealing profile, 7 mm set inwards

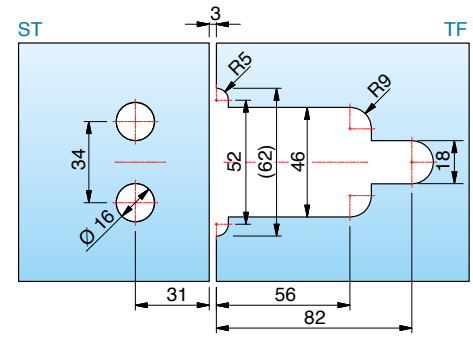



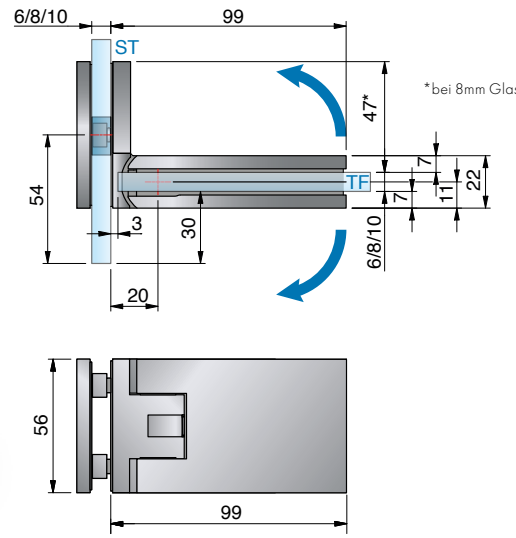

glass processing for 8 mm without sealing profile, 30 mm set inwards

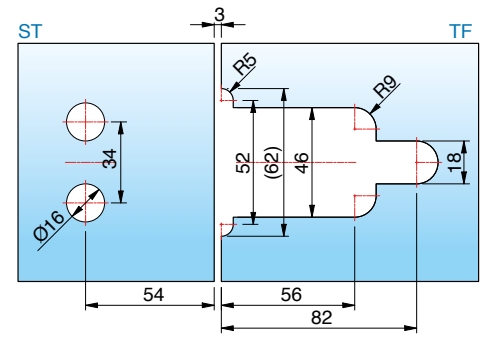

When using the hinges for 6 or 10 mm glass thickness, please use the insert set Art. No. HZ-SET5 per hinge free of charge.

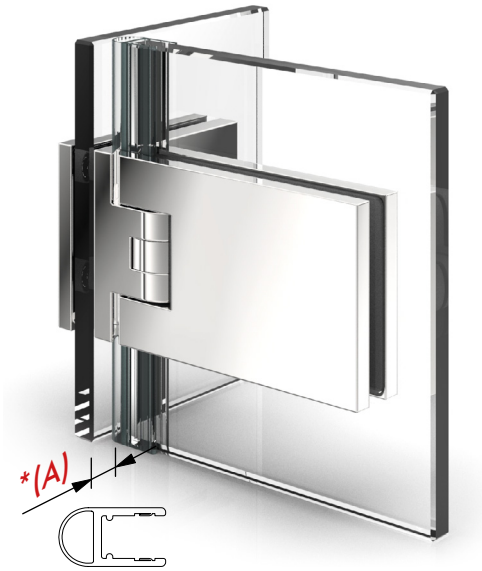

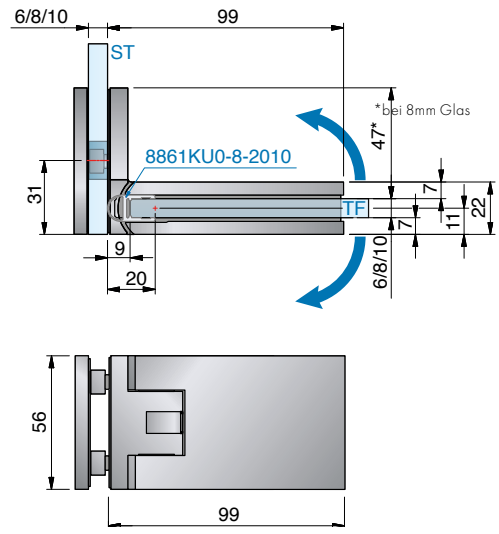

glass processing for 8 mm with sealing profile 8861KU0-8-2010, 7 mm set inwards

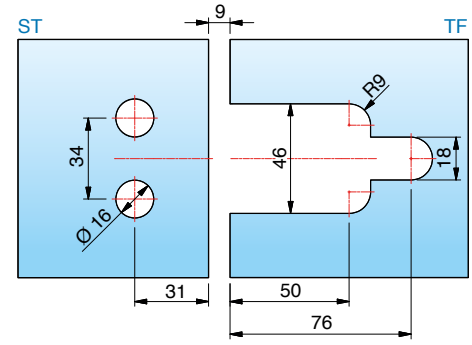

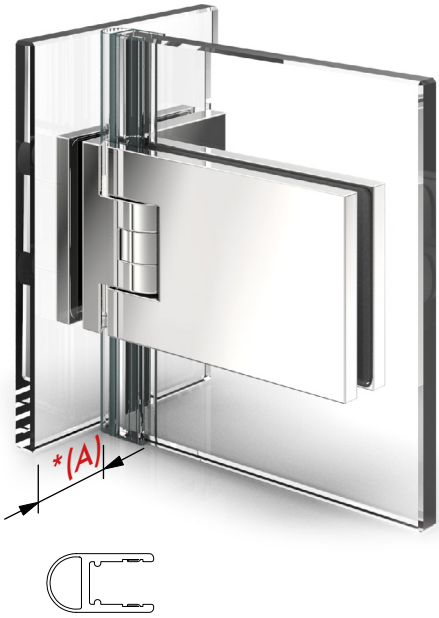

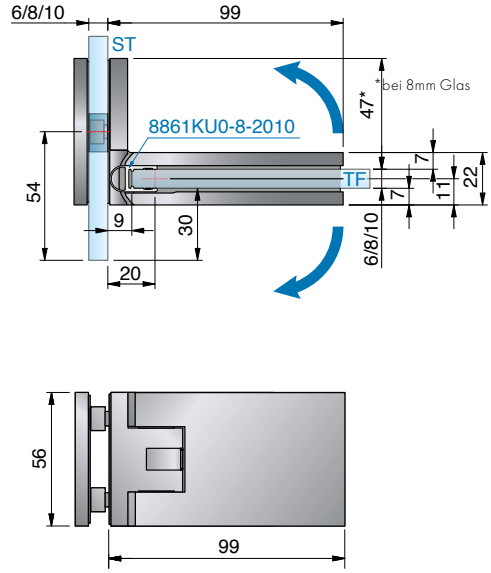

glass processing for 8 mm with sealing profile 8861KU0-8-2010, 30 mm set inwards

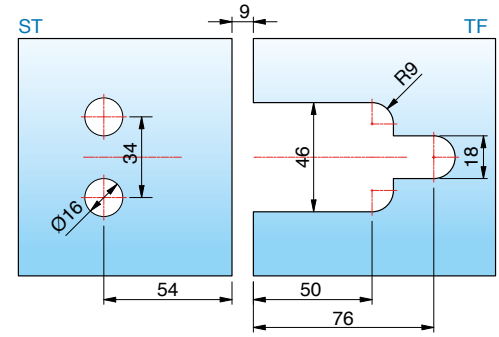

article no.	finish	glass thickness	article description	features	pu/pieces
8902ZN5 8902ZN1 8902ZNPVD22 8902ZNPVD35	gloss chrome matt chrome stainless steel optic black matt	6/8/10 mm	shower swing door hinge FARDELLO glass-glass 90°	90° swing door hinge, with or without sealing profile, concealed screws, closed position fully adjustable, self-closing from approx. 15°-20°, seal profile cut in the hinge area. *offset dimension (A) of the side panel can be determined by the user.	1/2

TF = door panel I W = wall

folding systems with FARDELLO/ FLINTER

FARDELLO is at its best in combination with the FLINTER series. The elegant eye-catcher with high load-bearing capacity and the smallpower pack with intelligent spring technology unfold their full capabilities and flexibility, particularly in combined bathtub andvarious folding door systems. The whole process is simple and uncomplicated to implement - with the specialist expertise of Pauli + Sohn.



FARDELLO – 8900ZN



FLINTER – 8160ZN – available with 0-3 springs

The spring technology of the FLINTER shower door hinge allows you to determine the closing force of your door yourself when ordering. In the chart on page 138, you can find Pauli + Sohn's recommendations on the optimum closing force of the hinges, based on the door size. Please always include these in your order.







- hinges with 1 spring for light doors
- hinges with 2 springs for medium-heavy doors
- hinges with 3 springs for heavy doors

oversizes with folding systems without risk of over opening

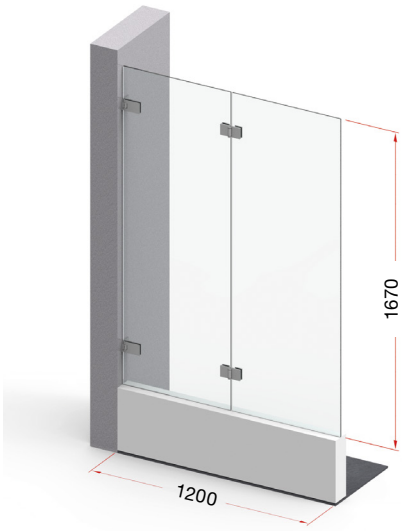

load capacity for system width 1200 mm: 40 kg

corresponds to a door height of 1670 mm with 8 mm glass

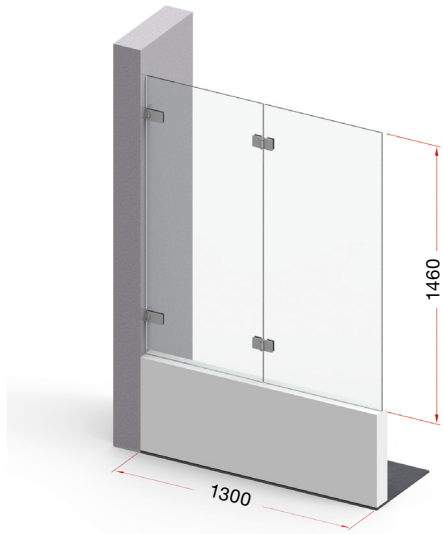

load capacity for system width 1300 mm: 38 kg

corresponds to a door height of 1460 mm with 8 mm glass

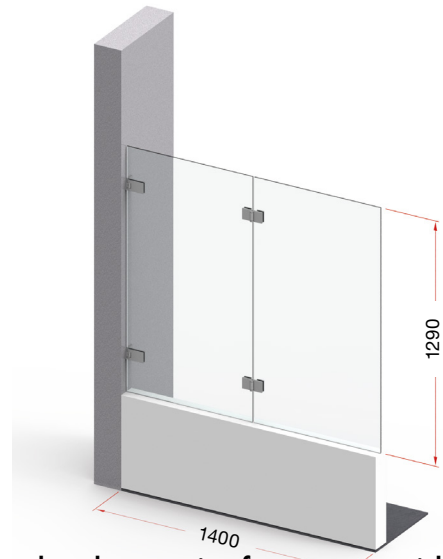

load capacity for system width 1400 mm: 36 kg

corresponds to a door height of 1290 mm with 8 mm glass

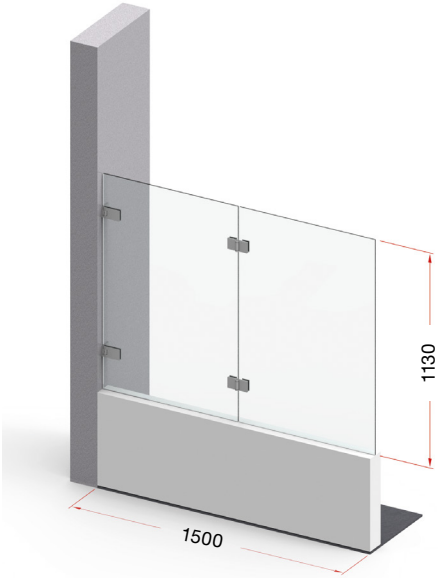

load capacity for system width 1500 mm: 34 kg

corresponds to a door height of 1130 mm with 8 mm glass







Attention: This data is only valid with optimal wall mounting and without the risk of over opening. Further information and examples of folding systems can be found on pages 120-121.

folding systems dimensions with FARDELLO/ FLINTER – glass-wall

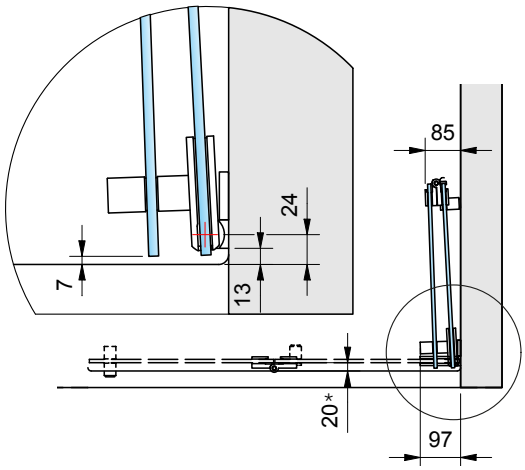

folding system 1: 8900ZN without seal profile and 8160ZN with seal profile 8865KU0

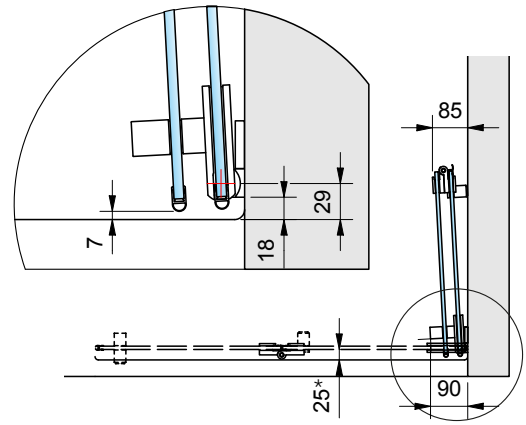

folding system 2: 8900ZN with seal profile 8861KU0 und 8160ZN with seal profile 8861KU0

* tray offset dimension









■ FARDELLO is also available in black!

folding systems dimensions with FARDELLO/ FLINTER – glass-glass

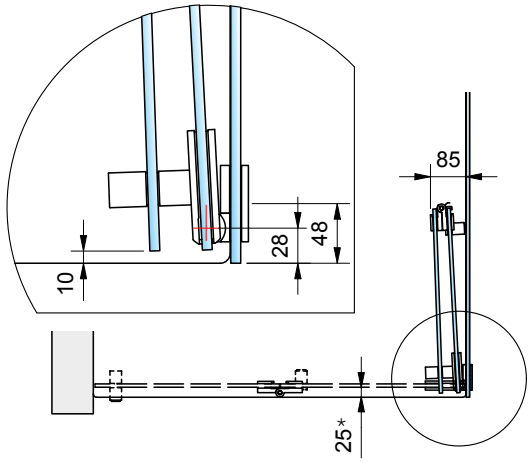

folding system 3: 8902ZN without seal profile and 8160ZN with seal profile 8865KU0

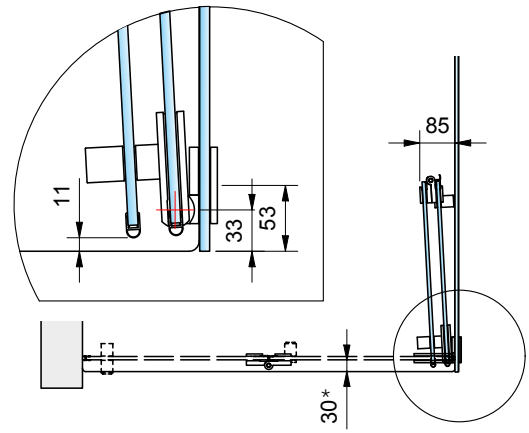

folding system 4: 8902ZN with seal profile 8861KU0 and 8160ZN with seal profile 8861KU0

* tray offset dimension







- we recommend the seal profile:

8865KU0 for folding door systems.

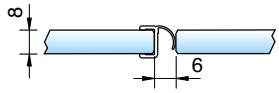

or 8857KU0

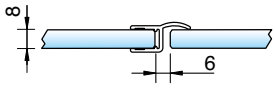

hole spacing for:



8273ZN



8271ZN

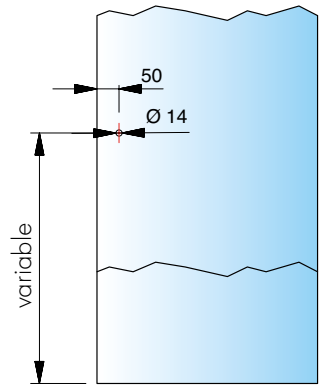

- for more information about the knobs 8271 and 8273 see page 301

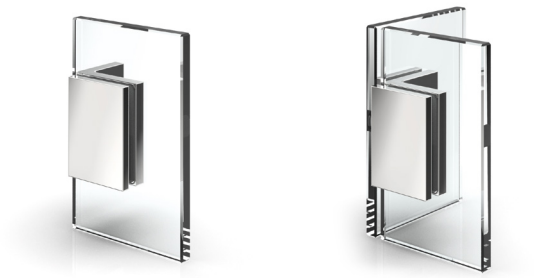

corresponding angle brackets

for FARDELLO Sauna can be found on page 128.

MADE IN GERMANY

Black EDITION

suited for saunas SN



sauna swing door hinge FARDELLO

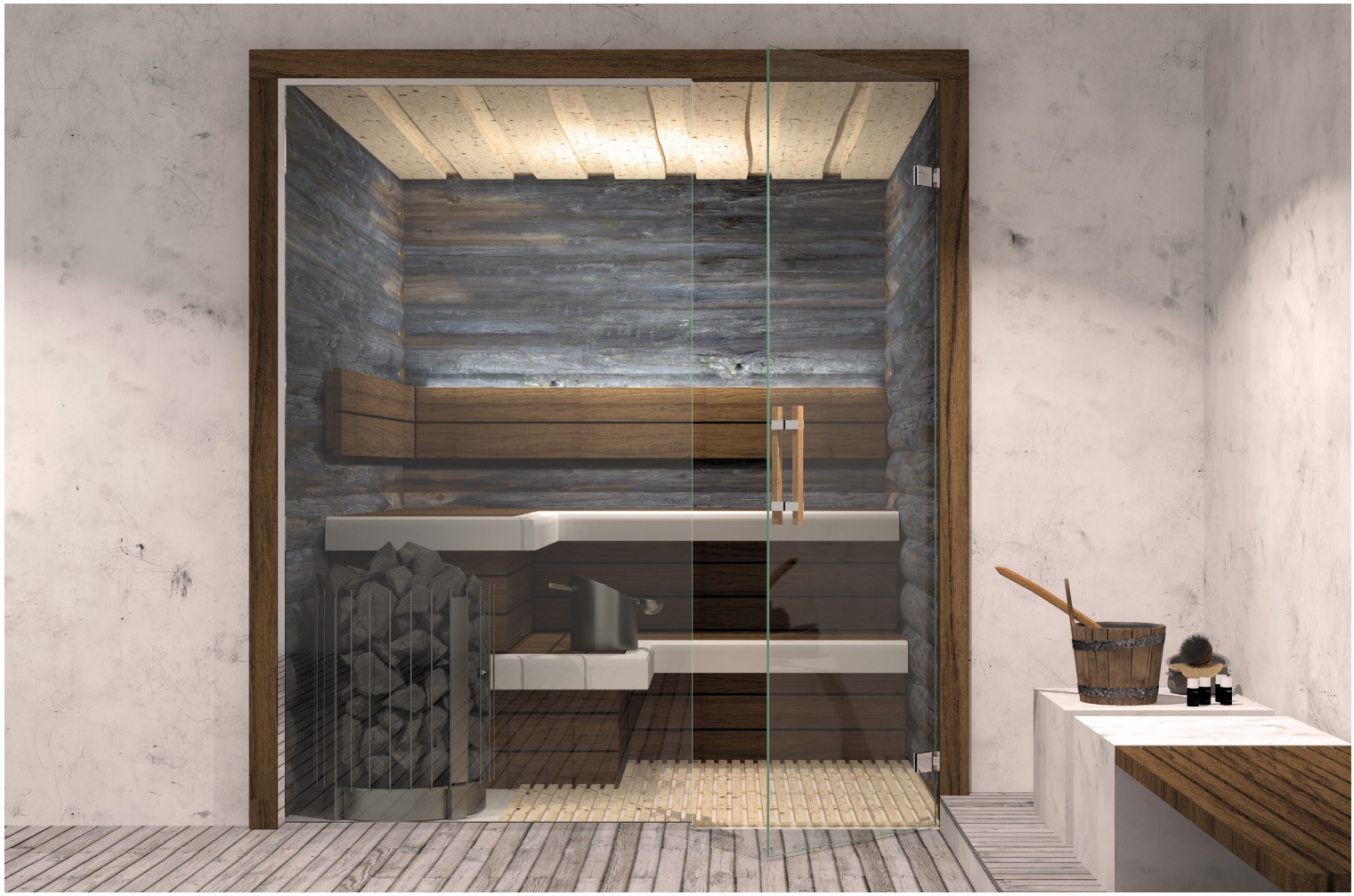

FARDELLO sauna – an expert for hot applications

MADE IN GERMANY

Whether compact private sauna or spacious sauna park - with FARDELLO SN, individual wellness oases can be realized. Our new hinge, specially designed for saunas, maintains its first-class functionality even at ambient temperatures of up to 100° C. This has been proven by our rigorous tests with the maximum permissible door dimensions.

- opens in- and outwards 90°
- minimized gap dimensions for use in the sauna area
- self-closing during the last 15 - 20°
- centrally located pivot point and therefore usable as swing door
- fully adjustable closed position
- excellent quality - "made in Germany" - during the production, materials are used which meet and withstand these special requirements.



- glass thickness: 8/10 mm
- suitable angle brackets
- max. temperature in height of the upper hinge 80°C (corresponds a general sauna heat adjustment temperature of 100°C)

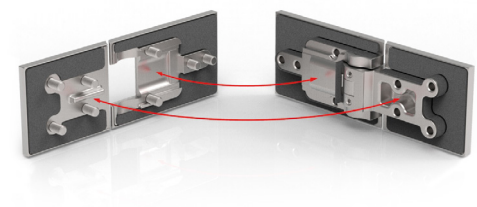

features

- **intelligent konstruiert:**
  The fitting body and counter plate interlock with each other and are firmly screwed together with 4 screws.
- the 7.5 mm thick wall mounting plate provides better load transfer
- the 3rd fixing hole prevents the fittings from twisting on the wall





8900ZN-SN

- max. door width 800 mm
- loading capacity (2 hinges): 32 kg (corresponding to a glass door with the dimension 800 x 2000 mm and a glass thickness of 8 mm)



8901ZN-SN

- max. door width 750 mm
- loading capacity (2 hinges): 30 kg (corresponding to a glass door with the dimension 750 x 2000 mm and a glass thickness of 8 mm)



8902ZN-SN

- max. door width 800 mm
- loading capacity (2 hinges): 32 kg (corresponding to a glass door with the dimension 800 x 2000 mm and a glass thickness of 8 mm)

sauna swing door hinge – FARDELLO SN



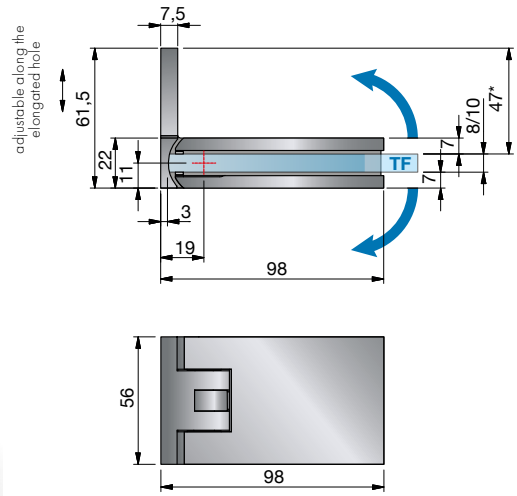

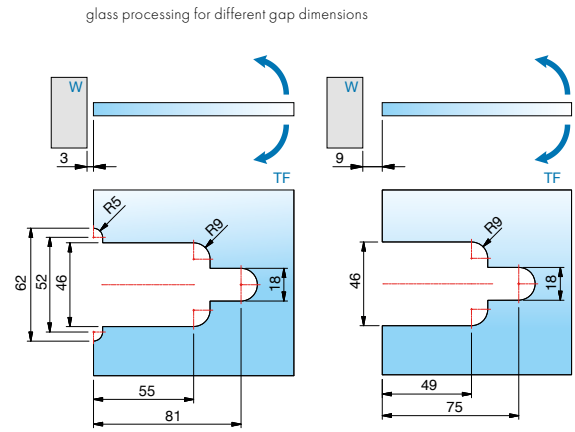

article no.	finish	glass thickness	article description	features	pu/pieces
8900ZN5-SN 8900ZN1-SN 8900ZNPVD22-SN 8900ZNPVD35-SN	gloss chrome matt chrome stainless steel optic black matt	8/10 mm	sauna swing door hinge FARDELLO glass-wall 90° max. door width 800 mm, loading capacity (2 hinges): 32 kg for max. 800 x 2000 x 8 mm	opens 90° inwards or outwards, concealed screws, wall mounting inside with oblong hole, closed position adjustable, self-closing at approx. 15° - 20°	1/2

Dimensions of wall bracket 8900ZN

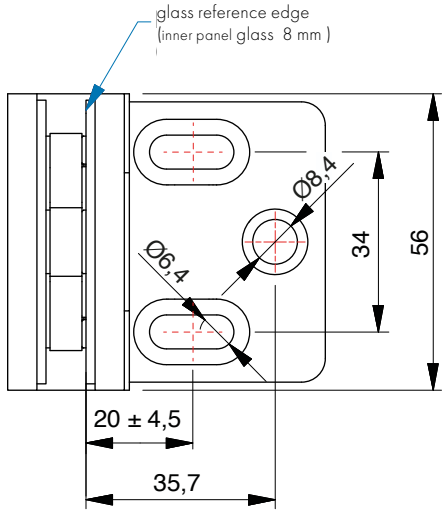

When using the hinges for 10 mm glass thickness, please use the insert set Art. No. HX-SET5 per hinge free of charge.



glass processing for different gap dimensions

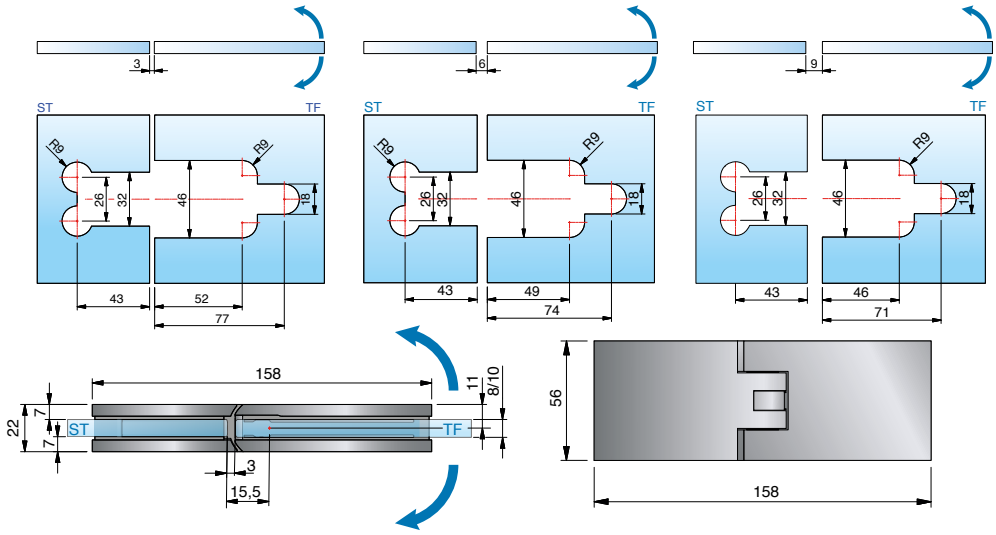

article no.	finish	glass thickness	article description	features	pu/pieces
8901ZN5-SN	gloss chrome	8/10 mm	sauna swing door hinge FARDELLO glass-glass 180° max. door width 750 mm, loading capacity (2 hinges): 30 kg for max. 750 x 2000 x 8 mm	opens 90° inwards or outwards, concealed screws, closed position adjustable, self-closing at approx. 15° - 20°	1/2
8901ZN1-SN	matt chrome				
8901ZNPVD22-SN	stainless steel optic				
8901ZNPVD35-SN	black matt				

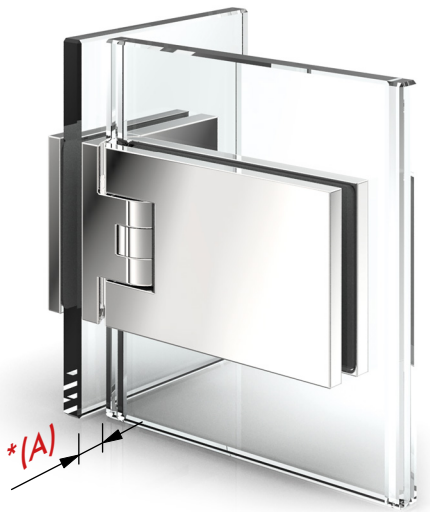

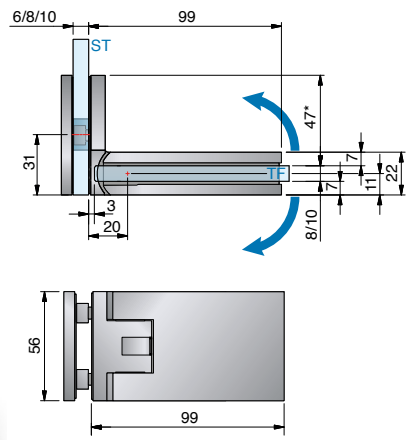

glass processing for different gap dimensions

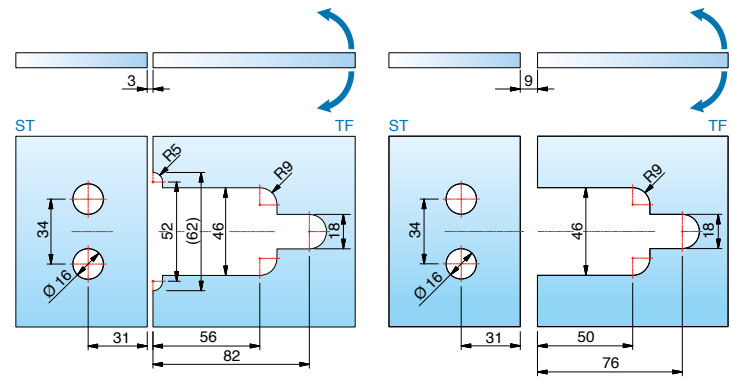

article no.	finish	glass thickness	article description	features	pu/pieces
8902ZN5-SN	gloss chrome	8/10 mm	sauna swing door hinge FARDELLO glass-glass 90° max. door width 800 mm, loading capacity (2 hinges): 32 kg for max. 800 x 2000 x 8 mm	opens 90° inwards or outwards, concealed screws, closed position adjustable, self-closing at approx. 15° - 20°, *offset dimension (A) of the side panel can be determined by the user.	1/2
8902ZN1-SN	matt chrome				
8902ZNPVD22-SN	stainless steel optic				
8902ZNPVD35-SN	black matt				

sauna angle bracket – FARDELLO SN



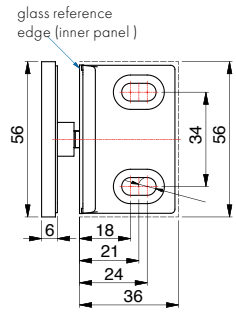

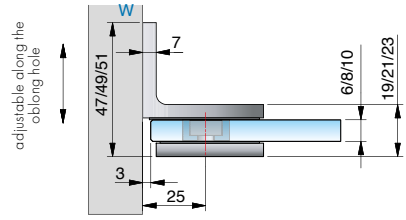

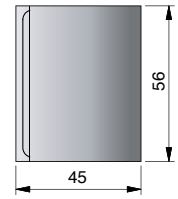

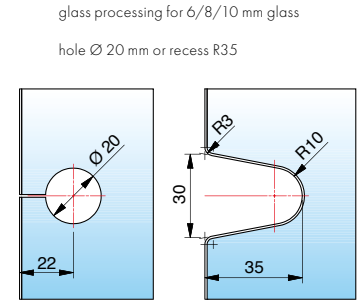

article no.	finish	glass thickness	article description	features	pu/pieces
8187ZN5-SN	gloss chrome	6/8/10 mm	FARDELLO Sauna angle bracket	wall mounting with oblong hole,	1/2
8187ZN1-SN	matt chrome		glass-wall 90°	concealed screws with cover plate	
8187ZNPVD22-SN	stainless steel optic				
8187ZNPVD35-SN	black matt				

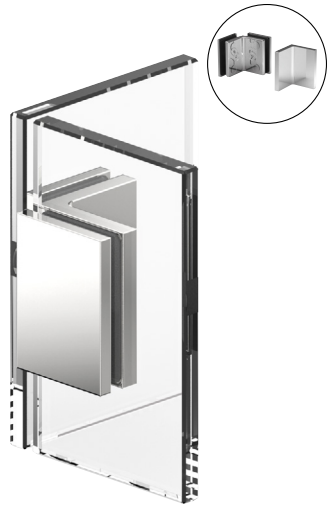

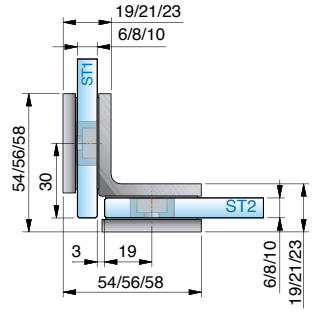

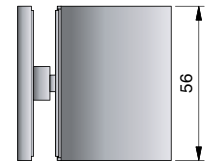

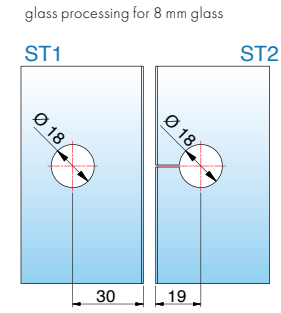

article no.	finish	glass thickness	article description	features	pu/pieces
8188ZN5-SN	gloss chrome	6/8/10 mm	FARDELLO Sauna angle bracket	concealed screws with cover plate	1/2
8188ZN1-SN	matt chrome		glass-glass 90°		
8188ZNPVD22-SN	stainless steel optic				
8188ZNPVD35-SN	black matt				

ST = side panel I TF = door panel I W = wall

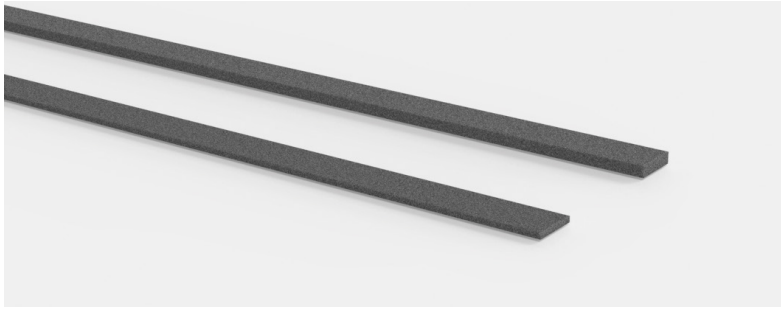

article no.	article description	pu/pieces
8878FKM-1	insert for glass cutout, 300x8x1 mm	1/1
8878FKM-2	insert for glass cutout, 300x8x2 mm	

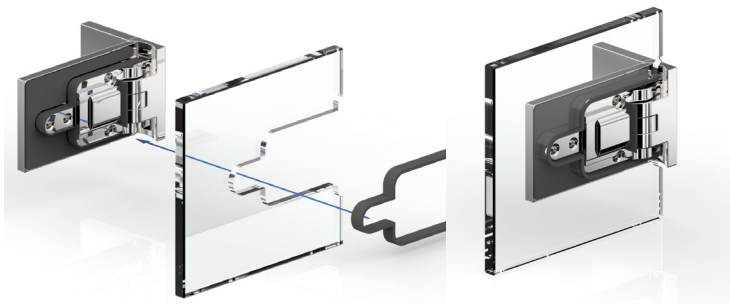





- care instructions

The sauna hardware may only be cleaned with warm water andwiped and dried with a soft cloth. Aggressive, alkaline or chlorinatedcleaners, scouring agents or solvents may not can be used.

For heavier soiling (lime, grease, soap stains) we recommend our special cleaning agent "Gentle Care" for shower hardware - see page 331. During cleaning, the door must be held with one hand to prevent over opening.

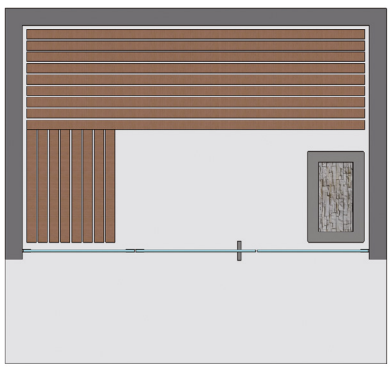

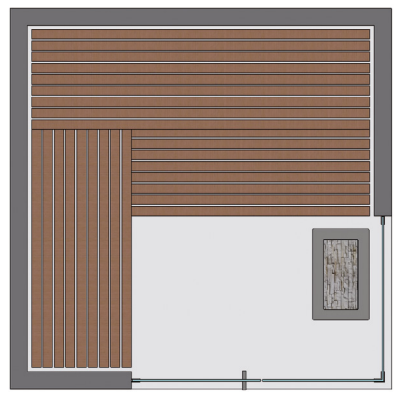

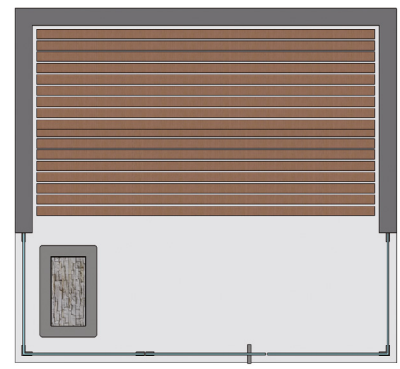

- many different installation situations are possible
- sauna swing door hinges and glass must be protected from damage. Therefore, when planning the sauna situation, it must be taken into account that the door panels are not over opend (max. 90°). Together, we can plan tailor-made solutions. - contact us!

Please note that the instruction manual can be found on page 382.



corresponding angle brackets

for FLINTER can be found on page 168.

our service for you!

On **www.pauli.de**, you can find many different measurement sheets for all standard installations.

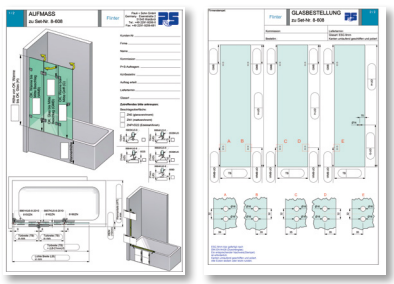

MADE IN GERMANY

Black EDITION



shower door hinge FLINTER



FLINTER – great, small

MADE IN GERMANY

FLINTER unfolds its full power in bathtubs and folding systems. The spring technology ensures a firm snap-in function of the door panel. Depending on size and weight and type of the door stop, you have the choice between 0 and 3 springs. For folding systems we recommend the combination with FLAMEA^{+} as a wall fixture. This allows the door panel while cleaning to be opened optimally to the outside. Incorrect operation is impossible!

- concealed screws due to cover plates
- self-closing during the last 15 - 20°
- full-length sealing profile on the hinge side
- adjustable closed position (snap-in at the closed position)
- very flat counterplates
- oblong hole adjustment in the wall mount
- glass thickness: 6, 8 and 10 mm
- loading capacity (2 hinges): 36 kg
  corresponds to a maximum glass door size of 900 x 2000 mm with a glass thickness of 8 mm
- the durability of the hardware has been tested internally according to DIN EN 14428:2015 5.5.



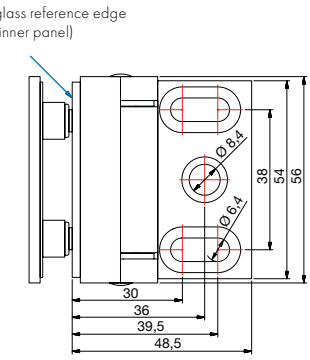

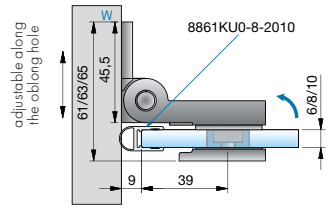

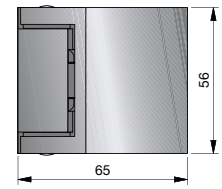

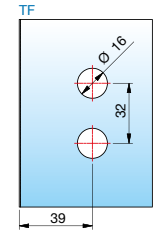

article no.	finish	glass thickness	article description	springs technology	features	pu/pieces
8150__	ZN5 – gloss chrome	6/8/10 mm	shower door hinge FLINTER glass-wall 90°	with 3 springs with 2 springs with 1 spring without springs	one-sided opening inwards 90°, with one-sided bracket, concealed screws due to cover plates	1/2
8150__-2F	ZN1 – matt chrome					
8150__-1F	ZNPVD22 – stainless steel optic					
8150__-0F	ZNPVD35 – black matt					



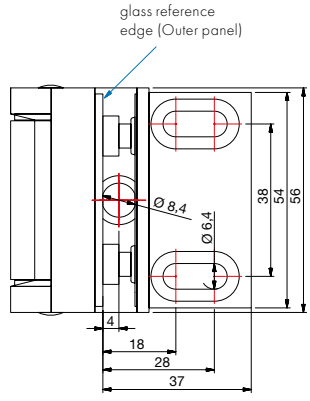

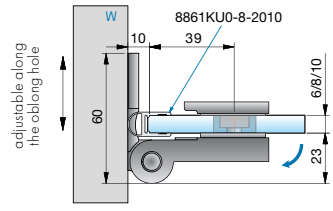

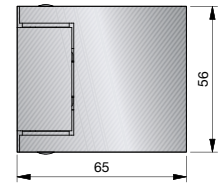

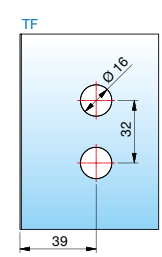

article no.	finish	glass thickness	article description	springs technology	features	pu/pieces
8152__	ZN5 – gloss chrome	6/8/10 mm	shower door hinge FLINTER glass-wall 90°	with 3 springs with 2 springs with 1 spring without springs	one-sided opening inwards 90°, with one-sided bracket, concealed screws due to cover plates	1/2
8152__-2F	ZN1 – matt chrome					
8152__-1F	ZNPVD22 – stainless steel optic					
8152__-0F	ZNPVD35 – black matt					

ST = side panel I TF = door panel I W = wall

shower door hinge - FLINTER



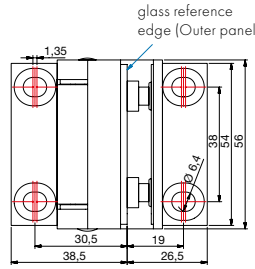

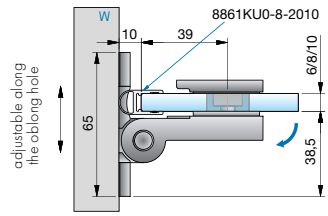

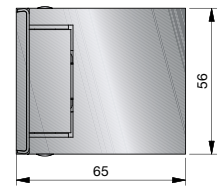

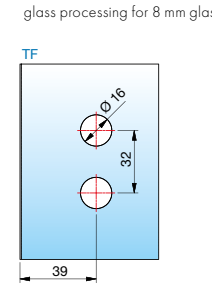

article no.	finish	glass thickness	article description	springs technology	features	pu/pieces
8154__	ZN5 – gloss chrome	6/8/10 mm	shower door hinge FLINTER glass-wall 90°	with 3 springs	one-sided opening outwards 90°, with with two-sided bracket, concealed screws due to cover plates	1/2
8154__-2F	ZN1 – matt chrome			with 2 springs		
8154__-1F	ZNPVD22 – stainless steel optic			with 1 spring		
8154__-0F	ZNPVD35 – black matt			without springs		

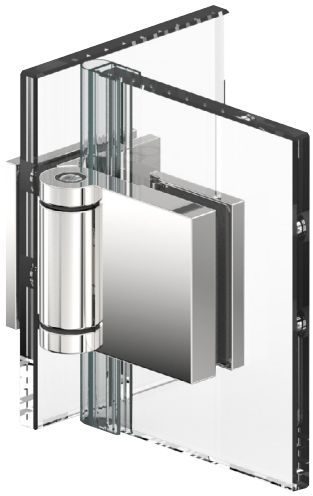

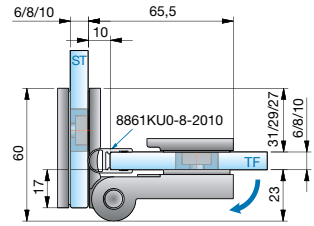

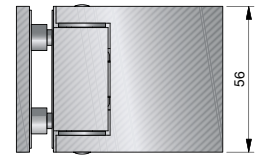

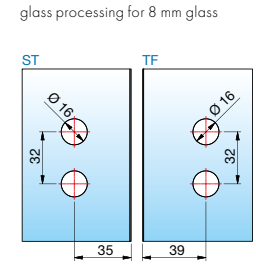

article no.	finish	glass thickness	article description	springs technology	features	pu/pieces
8158__	ZN5 – gloss chrome	6/8/10 mm	shower door hinge FLINTER glass-glass 90°	with 3 springs	one-sided opening outwards 90°, concealed screws due to cover plates (screws on the side panel part visible)	1/2
8158__-2F	ZN1 – matt chrome			with 2 springs		
8158__-1F	ZNPVD22 – stainless steel optic			with 1 spring		
8158__-0F	ZNPVD35 – black matt			without springs		

ST = side panel TF = door panel W = wall



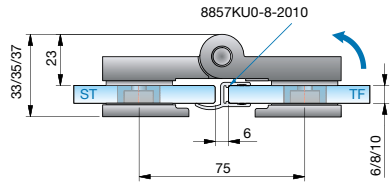

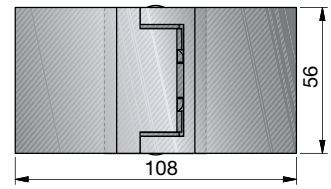

glass processing for 8 mm glass

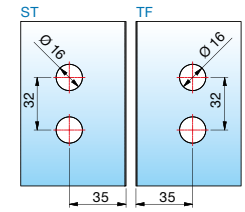

article no.	finish	glass thickness	article description	springs technology	features	pu/pieces
8160__	ZN5 – gloss chrome	6/8/10 mm	shower door hinge FLINTER glass-glass 180°	with 3 springs	one-sided opening inwards 180°, concealed screws due to cover plates	1/2
8160__-2F	ZN1 – matt chrome			with 2 springs		
8160__-1F	ZNPVD22 – stainless steel optic			with 1 spring		
8160__-0F	ZNPVD35 – black matt			without springs		



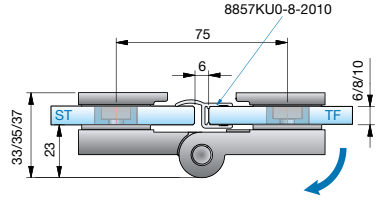

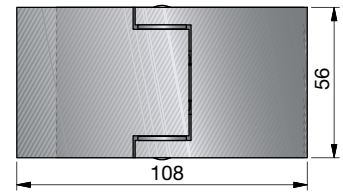

glass processing for 8 mm glass

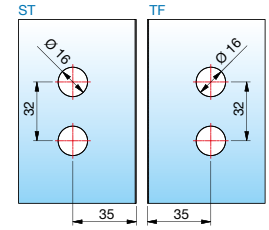

article no.	finish	glass thickness	article description	springs technology	features	pu/pieces
8162__	ZN5 – gloss chrome	6/8/10 mm	shower door hinge FLINTER glass-glass 180°	with 3 springs	one-sided opening outwards 180°, concealed screws due to cover plates	1/2
8162__-2F	ZN1 – matt chrome			with 2 springs		
8162__-1F	ZNPVD22 – stainless steel optic			with 1 spring		
8162__-0F	ZNPVD35 – black matt			without springs		

shower door hinge - FLINTER



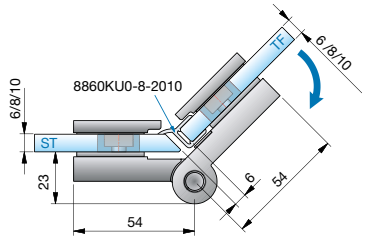



glass processing for 8 mm glass

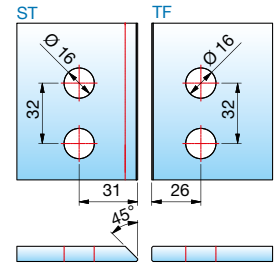

article no.	finish	glass thickness	article description	springs technology	features	pu/pieces
8164__	ZN5 – gloss chrome	6/8/10 mm	shower door hinge FLINTER glass-glass 135°	with 3 springs	one-sided opening outwards 225° concealed screws due to cover plates	1/2
8164__-2F	ZN1 – matt chrome			with 2 springs		
8164__-1F	ZNPVD22 – stainless steel optic			with 1 spring		
8164__-0F	ZNPVD35 – black matt			without springs		

We recommend to install all available striker hinges with sealing profiles to avoid damage to the glass.
Please note that the instruction manual can be found on page 382.

ST = side panel I TF = door panel I W = wall



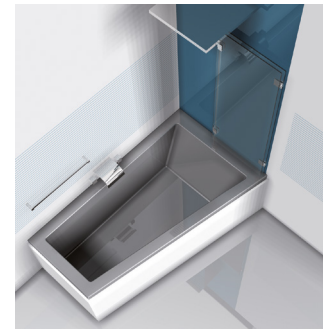

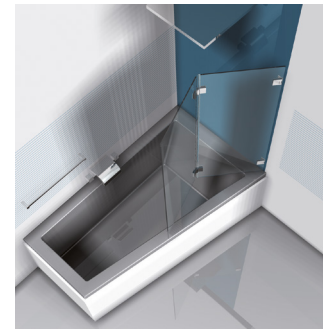

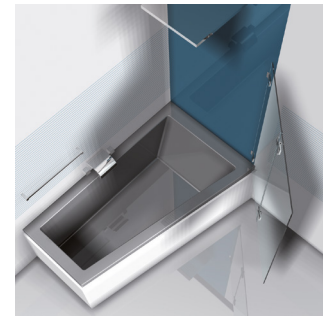



8162ZN



8900ZN



8130ZN

application with FLINTER (8162ZN) and the FLAMEA or FLAMEA+

- this avoids any mistakes while opening the door outwards.
- the door panel can be cleaned outside the shower.
- for the maximum glass dimensions, please refer to the overview on page 119.
- when used as a folding partition with "glass-glass 180° outward-opening" (8162ZN) and "glass-wall 90° inward-opening" (8150ZN) hinges, these automatically align themselves near the closed position

General note

- due to the system, a superficial matting may occur in the area of the rollers on the visible surface due to micro-scratches.

recommended number of springs for doors using FLINTER

- hinges with 1 spring for lightweight doors
- hinges with 2 springs for mediumweight doors
- hinges with 4 springs for heavyweight doors
- door is too heavy

			door width									
			450 mm	500 mm	550 mm	600 mm	650 mm	700 mm	750 mm	800 mm	850 mm	900 mm
door heigth	6 mm	1600 mm	10,8 kg	12,0 kg	13,2 kg	14,4 kg	15,6 kg	16,8 kg	18,0 kg	19,2 kg	20,4 kg	21,6 kg
		1700 mm	11,5 kg	12,8 kg	14,0 kg	15,3 kg	16,6 kg	17,9 kg	19,1 kg	20,4 kg	21,7 kg	23,0 kg
		1800 mm	12,2 kg	13,5 kg	14,9 kg	16,2 kg	17,6 kg	18,9 kg	20,3 kg	21,6 kg	23,0 kg	24,3 kg
		1900 mm	12,8 kg	14,3 kg	15,7 kg	17,1 kg	18,5 kg	20,0 kg	21,4 kg	22,8 kg	24,2 kg	25,7 kg
		2000 mm	13,5 kg	15,0 kg	16,5 kg	18,0 kg	19,5 kg	21,0 kg	22,5 kg	24,0 kg	25,5 kg	27,0 kg
		2100 mm	14,2 kg	15,8 kg	17,3 kg	18,9 kg	20,5 kg	22,1 kg	23,6 kg	25,2 kg	26,8 kg	28,4 kg
	8 mm	1600 mm	14,4 kg	16,0 kg	17,6 kg	19,2 kg	20,8 kg	22,4 kg	24,0 kg	25,6 kg	27,2 kg	28,8 kg
		1700 mm	15,3 kg	17,0 kg	18,7 kg	20,4 kg	22,1 kg	23,8 kg	25,5 kg	27,2 kg	28,9 kg	30,6 kg
		1800 mm	16,2 kg	18,0 kg	19,8 kg	21,6 kg	23,4 kg	25,2 kg	27,0 kg	28,8 kg	30,6 kg	32,4 kg
		1900 mm	17,1 kg	19,0 kg	20,9 kg	22,8 kg	24,7 kg	26,6 kg	28,5 kg	30,4 kg	32,3 kg	34,2 kg
		2000 mm	18,0 kg	20,0 kg	22,0 kg	24,0 kg	26,0 kg	28,0 kg	30,0 kg	32,0 kg	34,0 kg	36,0 kg
		2100 mm	18,9 kg	21,0 kg	23,1 kg	25,2 kg	27,3 kg	29,4 kg	31,5 kg	33,6 kg	35,7 kg	37,8 kg
	10 mm	1600 mm	18,0 kg	20,0 kg	22,0 kg	24,0 kg	26,0 kg	28,0 kg	30,0 kg	32,0 kg	34,0 kg	36,0 kg
		1700 mm	19,1 kg	21,3 kg	23,4 kg	25,5 kg	27,6 kg	29,8 kg	31,9 kg	34,0 kg	36,1 kg	38,3 kg
		1800 mm	20,3 kg	22,5 kg	24,8 kg	27,0 kg	29,3 kg	31,5 kg	33,8 kg	36,0 kg	38,3 kg	40,5 kg
		1900 mm	21,4 kg	23,8 kg	26,1 kg	28,5 kg	30,9 kg	33,3 kg	35,6 kg	38,0 kg	40,4 kg	42,8 kg
		2000 mm	22,5 kg	25,0 kg	27,5 kg	30,0 kg	32,5 kg	35,0 kg	37,5 kg	40,0 kg	42,5 kg	45,0 kg
		2100 mm	23,6 kg	26,3 kg	28,9 kg	31,5 kg	34,1 kg	36,8 kg	39,4 kg	42,0 kg	44,6 kg	47,3 kg

The spring technology of the FLINTER shower door hinge allows you to determine how strong the closing force of your door should be yourself. In the chart on page 138, you can find the recommendations of Pauli + Sohn on the optimal closing force of the hinges in relation to the size of the door. Please always include this in your order.



spring technology - 1 spring



spring technology - 2 springs



spring technology - 3 springs

for door panel sizes up to a maximum of 900 mm:



2-panels = 1 spring



1-door panel/1-side panel = 2 springs



1-panel = 3 springs



corresponding angle brackets

for NIVELLO+ can be found on page 150.
for NIVELLO can be found on page 168.

our service for you!

On **www.pauli.de**, you can find many different measurement sheets for all standard installations.

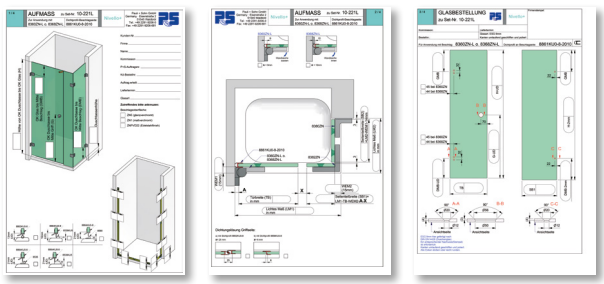

MADE IN GERMANY



shower door hinge with lifting function NIVELLO



NIVELLO und NIVELLO+ – perfect: transparent

MADE IN GERMANY

NIVELLO, the lifting & lowering shower door hinge offers perfection in detail. NIVELLO lifts the door comfortably during opening and closes automatically during lowering. In addition, the shower door hinge is very versityle - flush or with counter plate - NIVELLO is focused on design and functionality.

- load capacity (2 hinges): 36 kg
  corresponds to a glass door of 900 x 2000 mm with a glass thickness of 8 mm
- maximum panel size for bathtub applications 1200 x 1500 mm
- full-length sealing profile on the hinge side
- the durability of the hardware has been tested internally according to DIN EN 14428:2015 5.5.









flush

with counter plate

- lifting function – lifting height 6 mm, after approx. 54°
- self-closing during lowering
- wall fixation either on the inside or outside
- elegant design – concealed screws



NIVELLO+ - flush

Transparent design and harmonious alignment with adjacent areas are characteristics of modern architecture. The shower door hinge with a lift lowering-mechanism is flush on the inside and perfect for a comfortable cleaning. Moreover, the series offers a user-friendly mounting.

- the screw connection is made through the hinge body in a massive
- countersink bushing - this results in a particularly good surface flush
- independently adjustable in any direction (+/- 2 mm)
- flush glass mounting for easy cleaning
- infinitely adjustable closed position
- wall mounting with slotted hole adjustment
- concealed screws

mounted on the left, opening outwards 90°, mounting plate on the outside

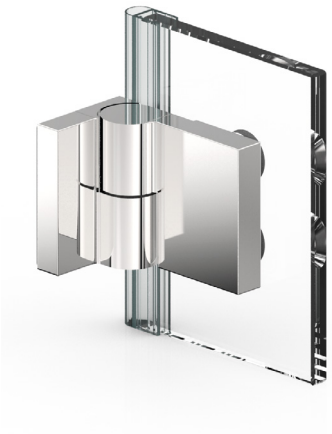

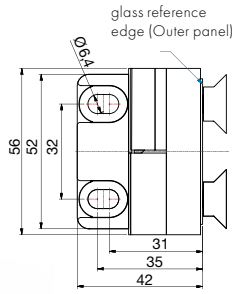

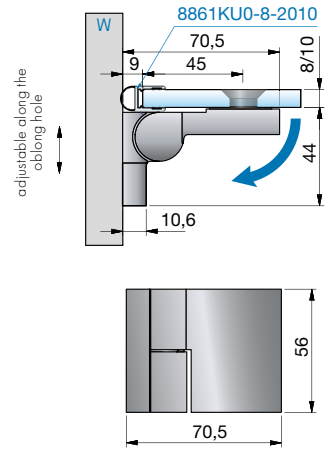

all dimensions/sealing profiles shown apply to 8 mm glass.

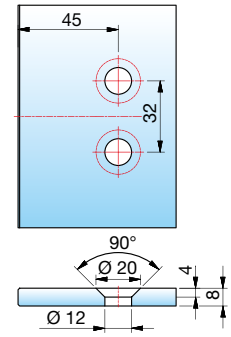

article no.	finish	glass thickness	article description	features	pu/pieces
8360ZN5-L	gloss chrome	8/10 mm	NIVELLO⁺ striker hinge with lifting function, glass-wall 90°	flush glass fastening, wall mounting outside with ob-long hole, concealed screws with cover cap, fix points independently adjustable ± 2 mm in every direction, closed position adjustable	1/2
8360ZN1-L	matt chrome				
8360ZNPVD22-L	stainless steel optic				

mounted on the right, opening outwards 90°, mounting plate on the outside

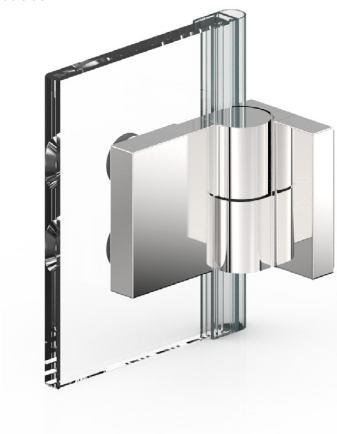

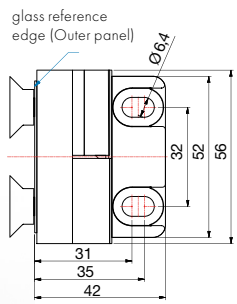

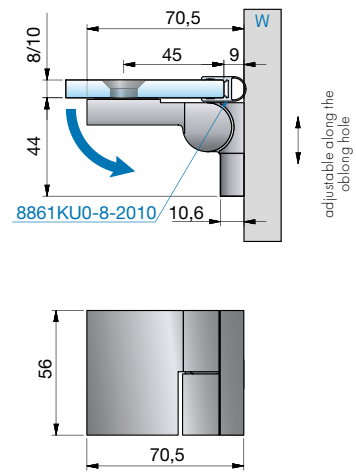

all dimensions/sealing profiles shown apply to 8 mm glass.

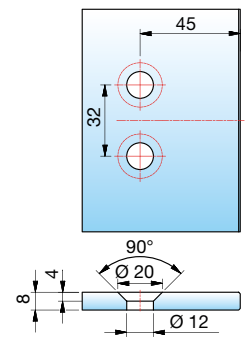

article no.	finish	glass thickness	article description	features	pu/pieces
8360ZN5-R	gloss chrome	8/10 mm	NIVELLO⁺ striker hinge with lifting function, glass-wall 90°	flush glass fastening, wall mounting outside with ob-long hole, concealed screws with cover cap, fix points independently adjustable ± 2 mm in every direction, closed position adjustable	1/2
8360ZN1-R	matt chrome				
8360ZNPVD22-R	stainless steel optic				

TF = door panel I W = wall

NIVELLO+ striker hinge – flush

mounted on the left, opening outwards 90°, mounting plate on the inside



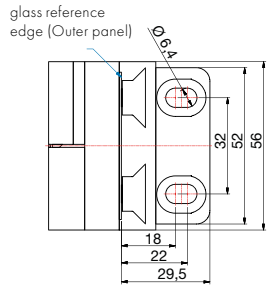

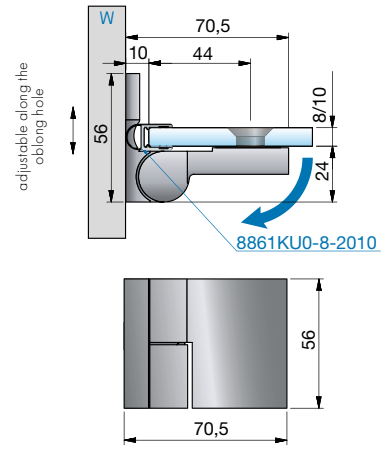

all dimensions/sealing profiles shown apply to 8 mm glass.

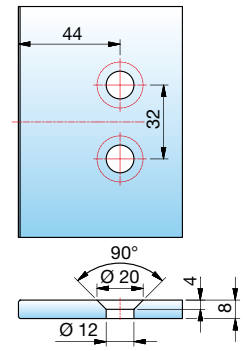

article no.	finish	glass thickness	article description	features	pu/pieces
8368ZN5-L	gloss chrome	8/10 mm	NIVELLO+ striker hinge with lifting function, glass-wall 90°	flush glass fastening, wall mounting inside with oblong hole, concealed screws with cover cap, fix points independently adjustable ± 2 mm in every direction, closed position adjustable	1/2
8368ZN1-L	matt chrome				
8368ZNPVD22-L	stainless steel optic				

mounted on the right, opening outwards 90°, mounting plate on the inside



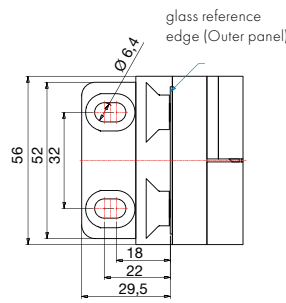

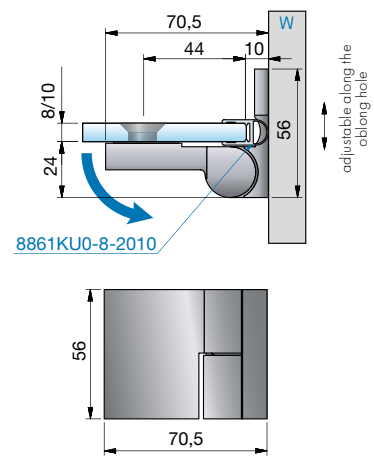

all dimensions/sealing profiles shown apply to 8 mm glass.

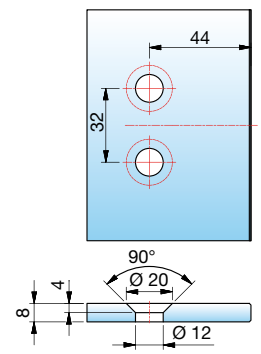

article no.	finish	glass thickness	article description	features	pu/pieces
8368ZN5-R	gloss chrome	8/10 mm	NIVELLO+ striker hinge with lifting function, glass-wall 90°	flush glass fastening, wall mounting inside with oblong hole, concealed screws with cover cap, fix points independently adjustable ± 2 mm in every direction, closed position adjustable	1/2
8368ZN1-R	matt chrome				
8368ZNPVD22-R	stainless steel optic				

TF = door panel I W = wall

mounted on the left,
opening outwards 180°

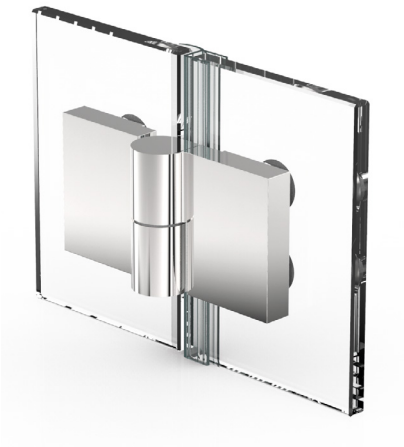

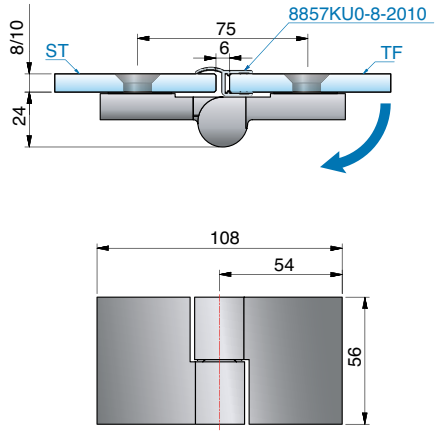

all dimensions/sealing
profiles shown apply to
8 mm glass.

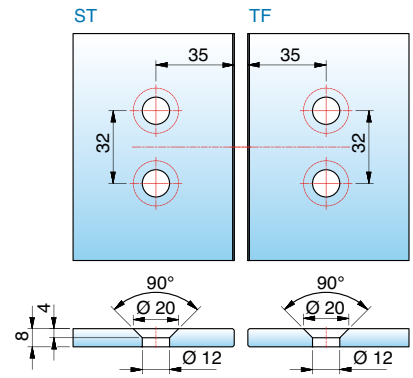

article no.	finish	glass thickness	article description	features	pu/pieces
8362ZN5-L	gloss chrome	8/10 mm	NIVELLO⁺ striker hinge with lifting function, glass-glass 180°	flush glass fastening, concealed screws with cover cap, fix points independently adjustable ± 2 mm in every direction, closed position adjustable	1/2
8362ZN1-L	matt chrome				
8362ZNPVD22-L	stainless steel optic				

mounted on the right,
opening outwards 180°

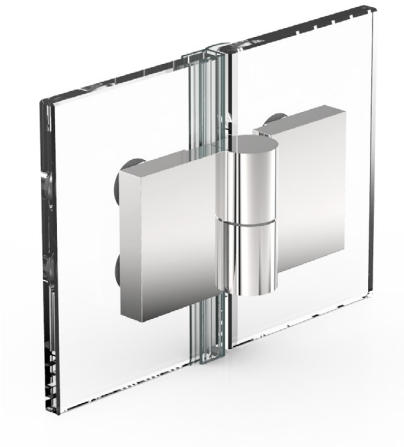

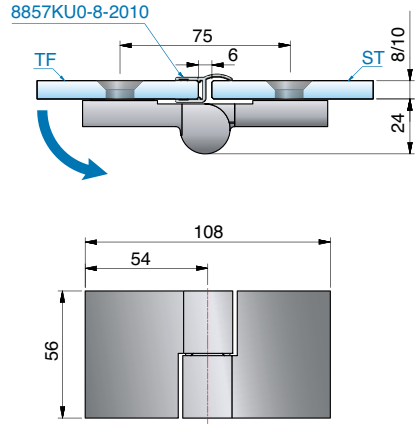

all dimensions/sealing
profiles shown apply to
8 mm glass.

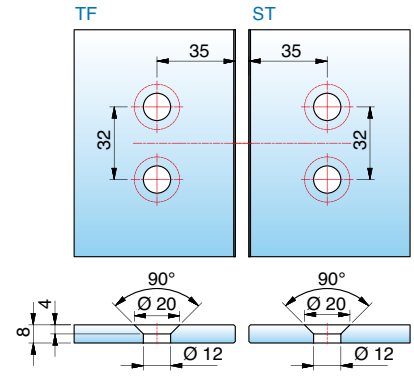

article no.	finish	glass thickness	article description	features	pu/pieces
8362ZN5-R	gloss chrome	8/10 mm	NIVELLO⁺ striker hinge with lifting function, glass-glass 180°	flush glass fastening, concealed screws with cover cap, fix points independently adjustable ± 2 mm in every direction, closed position adjustable	1/2
8362ZN1-R	matt chrome				
8362ZNPVD22-R	stainless steel optic				

ST = side panel I TF = door panel I W = wall

NIVELLO+ striker hinge – flush

mounted on the left,
opening outwards 180°
(2nd closed position)



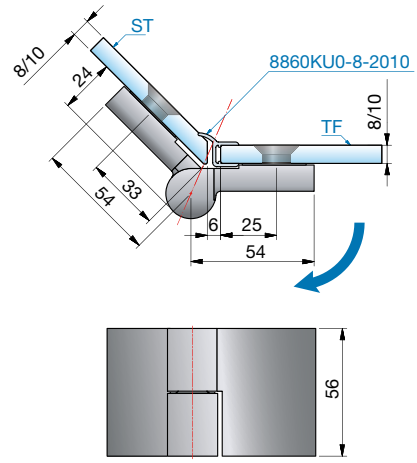

all dimensions/sealing profiles shown
apply to 8 mm glass.

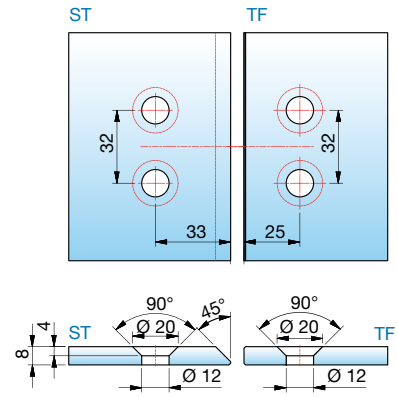

article no.	finish	glass thickness	article description	features	pu/pieces
8364ZN5-L	gloss chrome	8/10 mm	NIVELLO+ striker hinge with lifting function, glass-glass 135°	flush glass fastening, concealed screws with cover cap, fix points independently adjustable ± 2 mm in every direction, closed position adjustable	1/2
8364ZN1-L	matt chrome				
8364ZNPVD22-L	stainless steel optic				

mounted on the right,
opening outwards 180°
(2nd closed position)



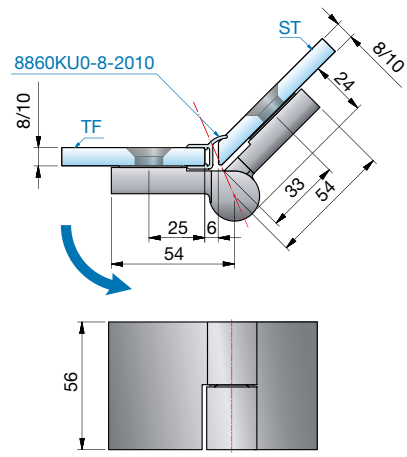

all dimensions/sealing profiles shown
apply to 8 mm glass.

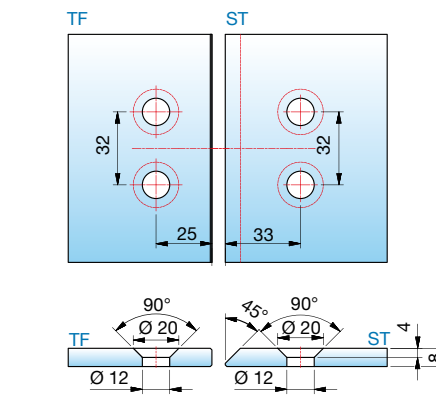

article no.	finish	glass thickness	article description	features	pu/pieces
8364ZN5-R	gloss chrome	8/10 mm	NIVELLO+ striker hinge with lifting function, glass-glass 135°	flush glass fastening, concealed screws with cover cap, fix points independently adjustable ± 2 mm in every direction, closed position adjustable	1/2
8364ZN1-R	matt chrome				
8364ZNPVD22-R	stainless steel optic				

ST = side panel I TF = door panel

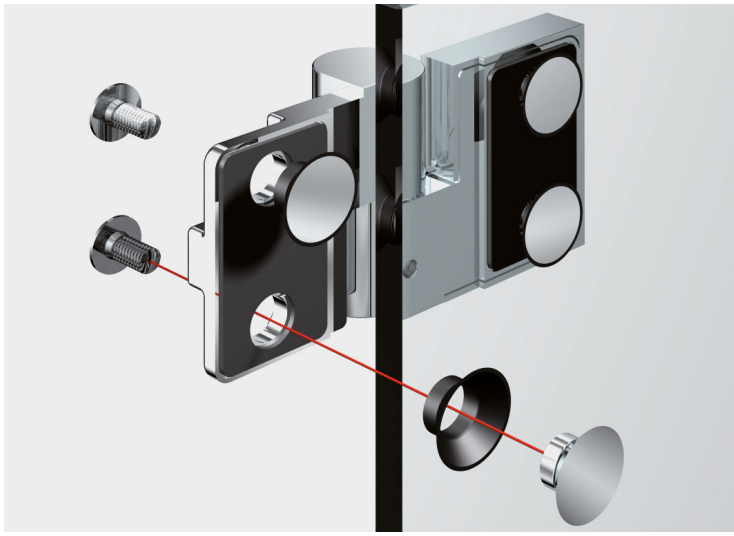

- the screws are installed through the hinge body into a massive countersink bushing – this creates a particularly good alignment with the adjacent areas
- independently adjustable in every direction (± 2 mm)

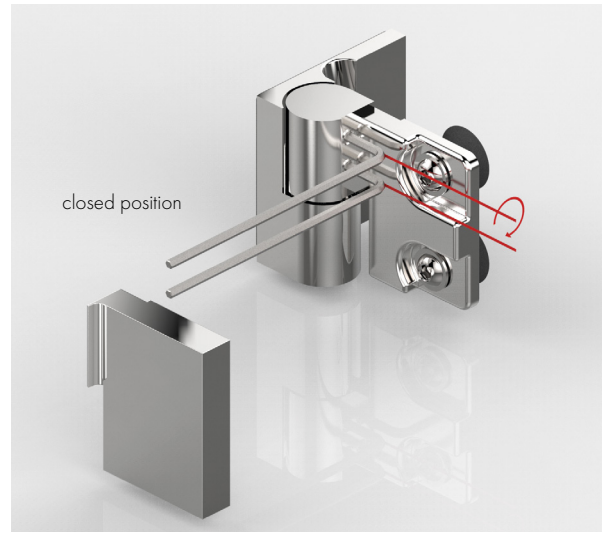

- infinitely adjustable closed position
- wall mounting with oblong holes
- elegant design – concealed screws

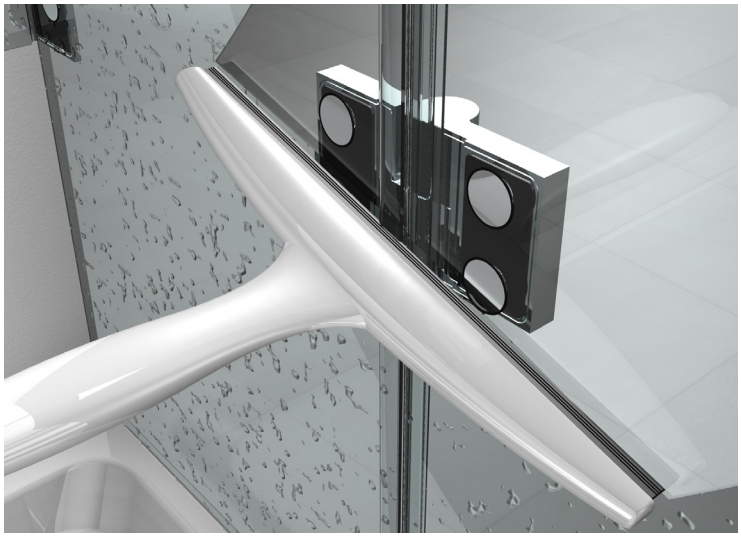

- flush-mounted glass fastening for simple cleaning

We recommend to install all available striker hinges with sealing profiles to avoid damage to the glass.
Please note that the instruction manual can be found on page 382.

NIVELLO+ striker hinge – flush



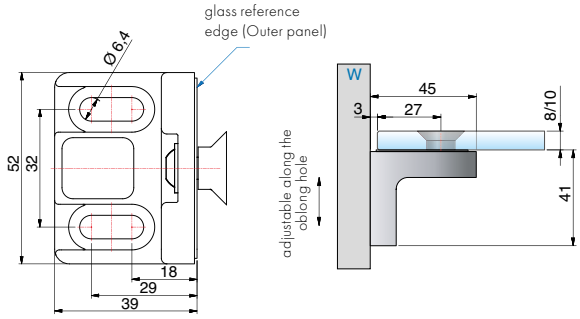

article no.	finish	glass thickness	article description	features	pu/pieces
8380ZN5	gloss chrome	8/10 mm	angle bracket NIVELLO+, glass-wall 90°, flush	mounting plate outside with oblong hole, cover cap, fix point independently adjustable ± 2 mm in every direction	1/2
8380ZN1	matt chrome				
8380ZNPVD22	stainless steel optic				



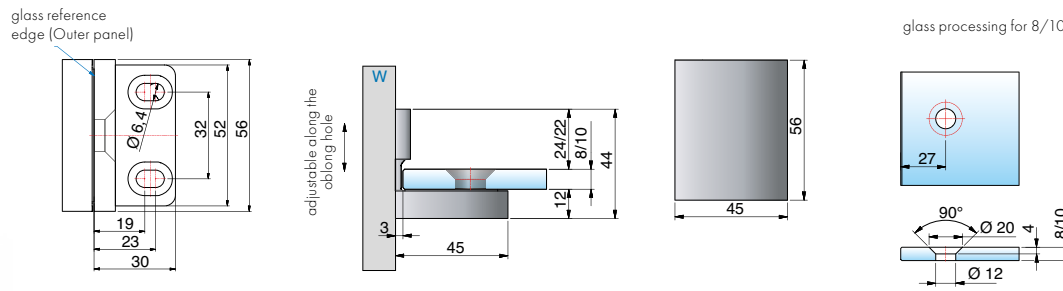

article no.	finish	glass thickness	article description	features	pu/pieces
8381ZN5	gloss chrome	8/10 mm	angle bracket NIVELLO+, glass-wall 90°, flush	mounting plate inside with oblong hole, cover cap, fix point independently adjustable ± 2 mm in every direction	1/2
8381ZN1	matt chrome				
8381ZNPVD22	stainless steel optic				

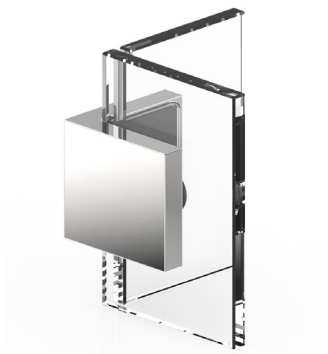

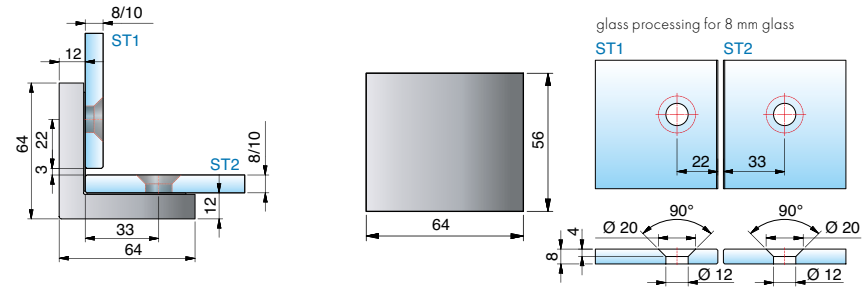

article no.	finish	glass thickness	article description	features	pu/pieces
8382ZN5	gloss chrome	8/10 mm	angle bracket NIVELLO+, glass-glass 90°, flush	cover cap, fix point independently adjustable ± 2 mm in every direction	1/2
8382ZN1	matt chrome				
8382ZNPVD22	stainless steel optic				

ST = side panel I W = wall









NIVELLO - with counter plate

NIVELLO combines the special technical possibilities of NIVELLO^{+} with a simple glass processing by the use of a very flat counter plate. The system plays its strengths for example in the use of bathtub folding partitions.

- mounting plate inside or outside
- glass fastening with counter plate
- hinges mountable on the right and on the left
- suitable for 6, 8 + 10 mm glass
- good adjustability within the hole
- fully adjustable closed position
- wall mounting with oblong hole
- elegant design – concealed screws

mounted on the left,
opening outwards 90°,
mounting plate on
the outside



glass reference
edge (Outer panel)

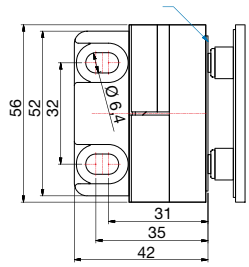

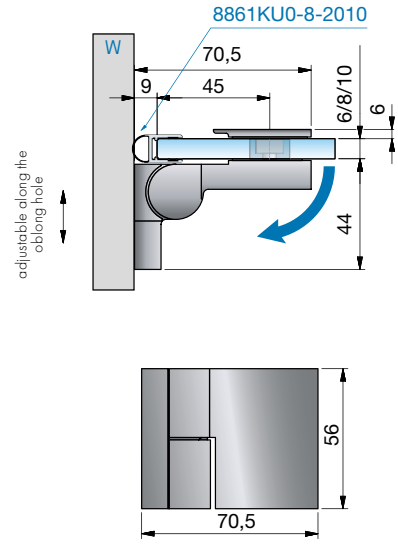

all dimensions/sealing
profiles shown apply to
8 mm glass.

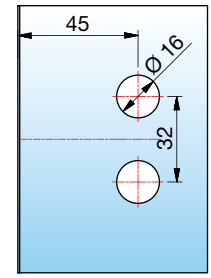

NIVELLO

mounted on the right,
opening inwards 90°,
mounting plate on
the inside

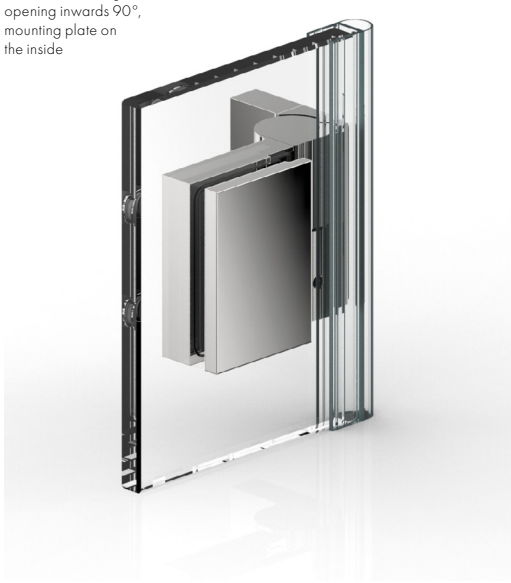

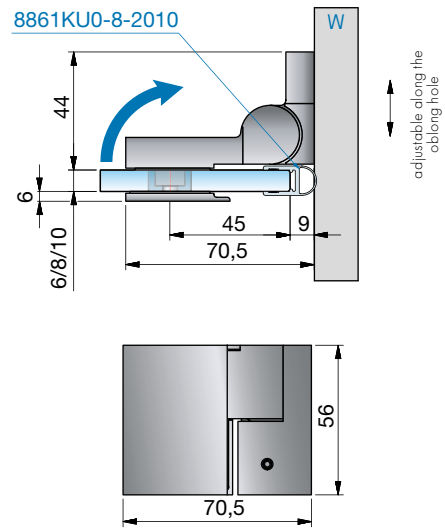

all dimensions/sealing
profiles shown apply to
8 mm glass.

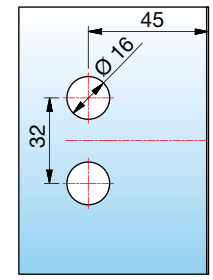

article no.	finish	glass thickness	article description	features	pu/pieces
8361ZN5-L	gloss chrome	6/8/10 mm	NIVELLO⁺ striker hinge with lifting function, glass-wall 90°	glass fastening with counter plate, wall mounting with oblong hole, concealed screws with cover cap, mountable in both situations, closed position adjustable	1/2
8361ZN1-L	matt chrome				
8361ZNPVD22-L	stainless steel optic				

ST = side panel I TF = door panel I W = wall

NIVELLO striker hinge – with counter plate

mounted on the right,
opening outwards 90°
mounting plate on the outside

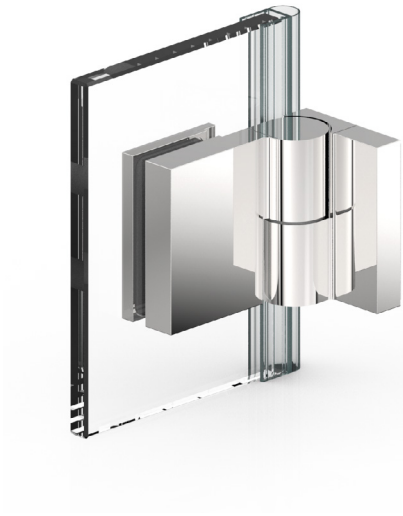

glass reference
edge (inner panel)

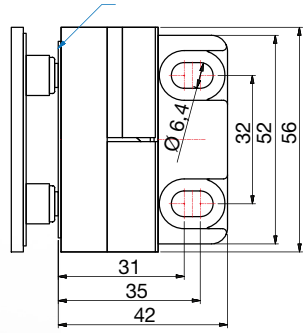

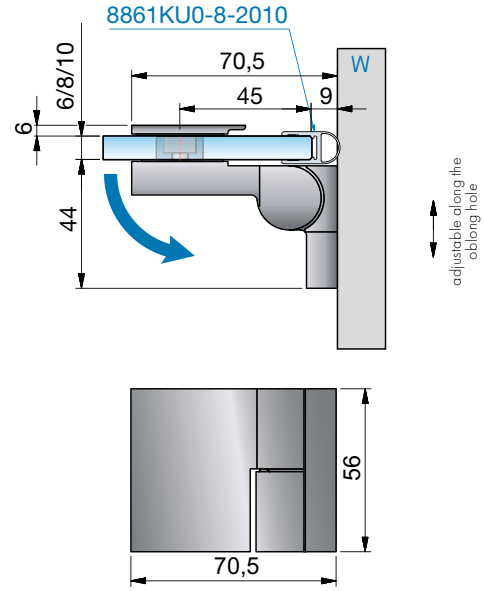

all dimensions/sealing
profiles shown apply to
8 mm glass.

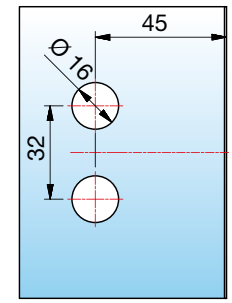

mounted on the left,
opening inwards 90°
mounting plate on the inside

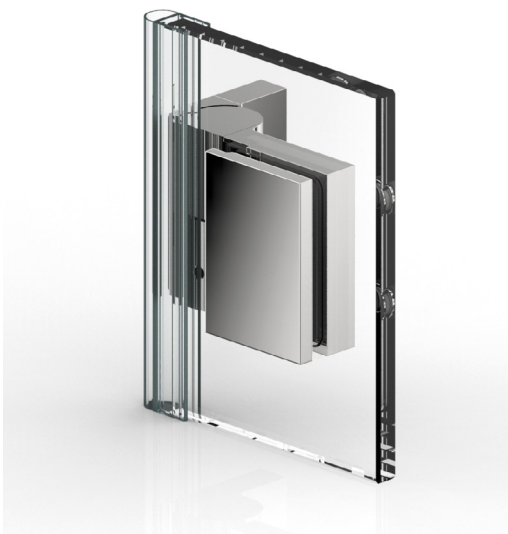

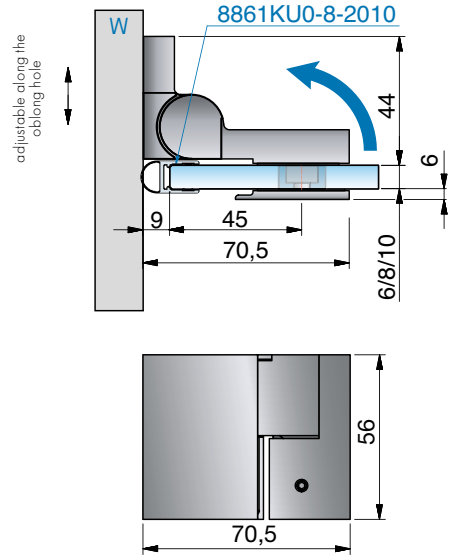

all dimensions/sealing
profiles shown apply to
8 mm glass.

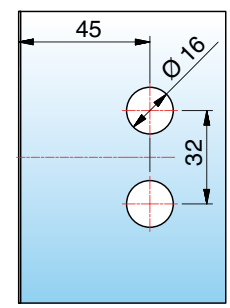

article no.	finish	glass thickness	article description	features	pu/pieces
8361ZN5-R	gloss chrome	6/8/10 mm	NIVELLO striker hinge with lifting function, glass-wall 90°	glass fastening with counter plate, wall mounting with oblong hole, concealed screws with cover cap, mountable in both situations, closed position adjustable	1/2
8361ZN1-R	matt chrome				
8361ZNPVD22-R	stainless steel optic				

TF = door panel W = wall

mounted on the left,
opening outwards 90°
mounting plate on the inside



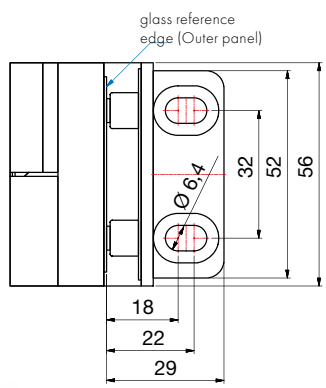

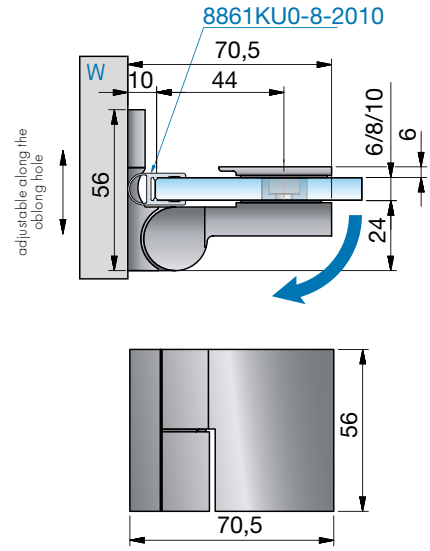

all dimensions/sealing profiles shown apply to 8 mm glass.

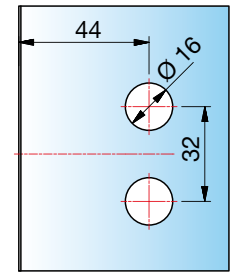

article no.	finish	glass thickness	article description	features	pu/pieces
8369ZN5-L	gloss chrome	6/8/10 mm	NIVELLO striker hinge with lifting function, glass-wall 90°	glass fastening with counter plate, wall mounting inside with oblong hole, concealed screws with cover cap, closed position adjustable	1/2
8369ZN1-L	matt chrome				
8369ZNPVD22-L	stainless steel optic				

mounted on the right,
opening outwards 90°
mounting plate on the inside



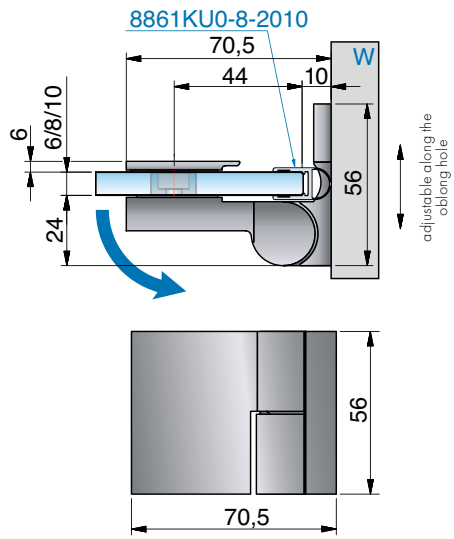

all dimensions/sealing profiles shown apply to 8 mm glass.

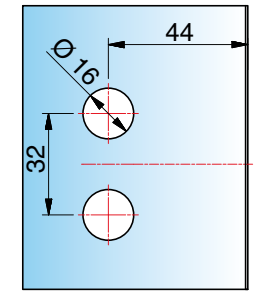

article no.	finish	glass thickness	article description	features	pu/pieces
8369ZN5-R	gloss chrome	6/8/10 mm	NIVELLO striker hinge with lifting function, glass-wall 90°	glass fastening with counter plate, wall mounting inside with oblong hole, concealed screws with cover cap, closed position adjustable	1/2
8369ZN1-R	matt chrome				
8369ZNPVD22-R	stainless steel optic				

TF = door panel I W = wall

NIVELLO striker hinge – with counter plate

mounted on the left,
opening outwards 180°



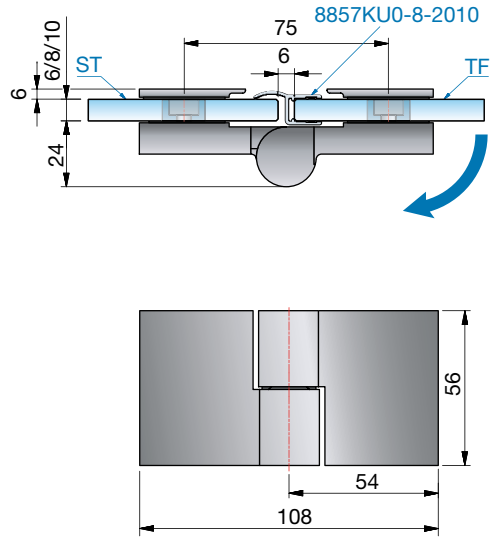

all dimensions/sealing
profiles shown apply to
8 mm glass.

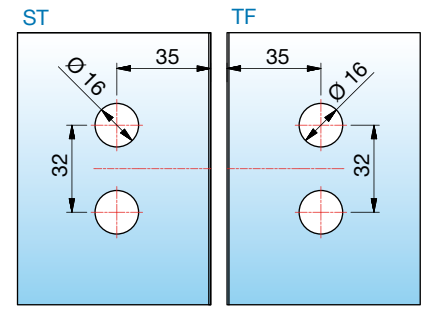

mounted on the right,
opening inwards 180°



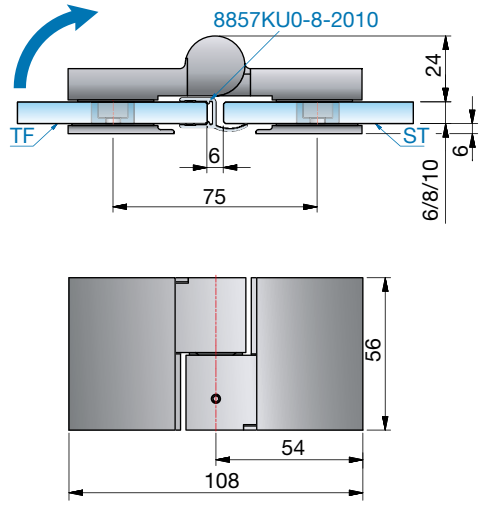

all dimensions/sealing
profiles shown apply to
8 mm glass.

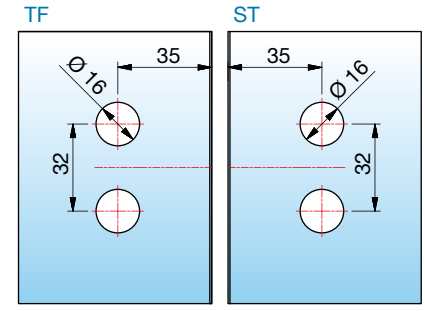

article no.	finish	glass thickness	article description	features	pu/pieces
8363ZN5-L	gloss chrome	6/8/10 mm	NIVELLO striker hinge with lifting function, glass-glass 180°	glass fastening with counter plate, concealed screws with cover cap, mountable in both situations, closed position adjustable	1/2
8363ZN1-L	matt chrome				
8363ZNPVD22-L	stainless steel optic				

ST = side panel I TF = door panel

mounted on the right,
opening outwards 180°



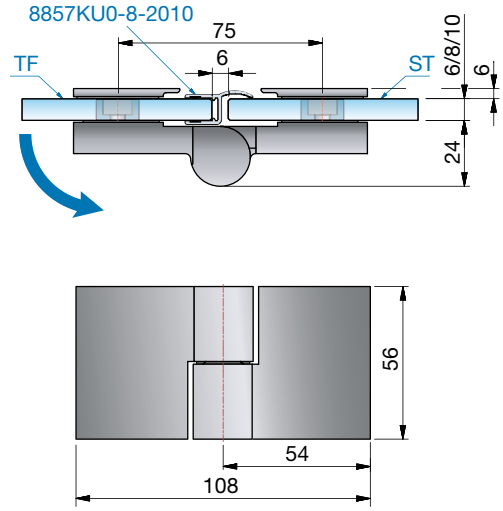

all dimensions/sealing
profiles shown apply to
8 mm glass.

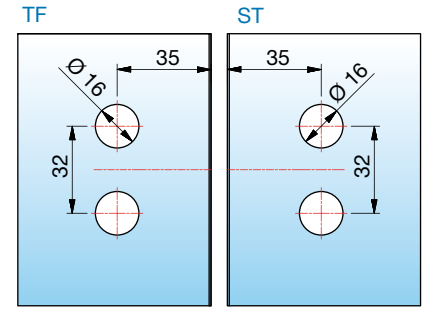

mounted on the left,
opening inwards 180°

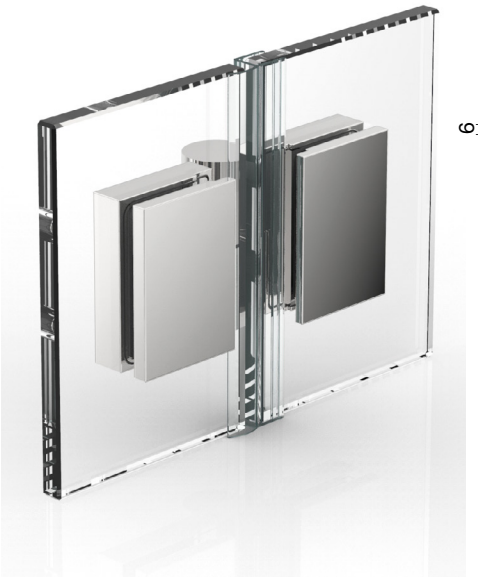

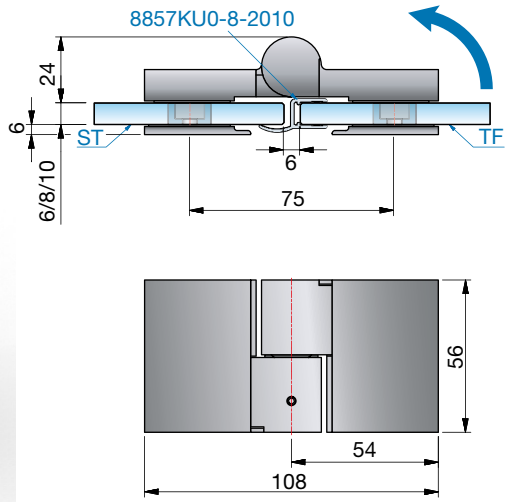

all dimensions/sealing
profiles shown apply to
8 mm glass.

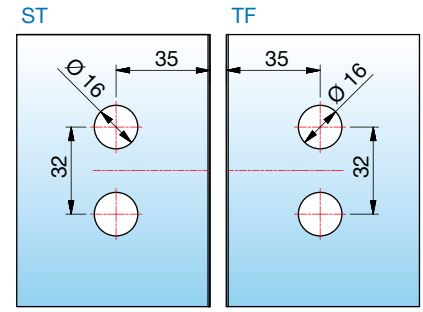

article no.	finish	glass thickness	article description	features	pu/pieces
8363ZN5-R	gloss chrome	6/8/10 mm	NIVELLO striker hinge with lifting function, glass-glass 180°	glass fastening with counter plate, concealed screws with cover cap, mountable in both situations, closed position adjustable	1/2
8363ZN1-R	matt chrome				
8363ZNPVD22-R	stainless steel optic				

ST = side panel I TF = door panel

NIVELLO striker hinge – with counter plate

mounted on the left,
opening outwards 180°
(resting position)



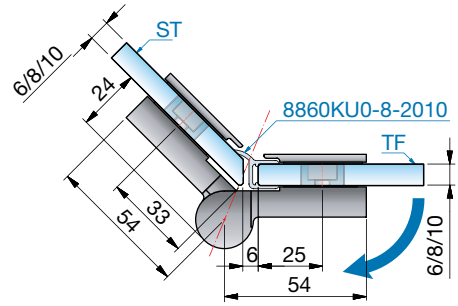

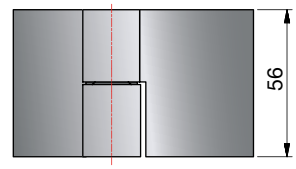

all dimensions/sealing profiles shown
apply to 8 mm glass.

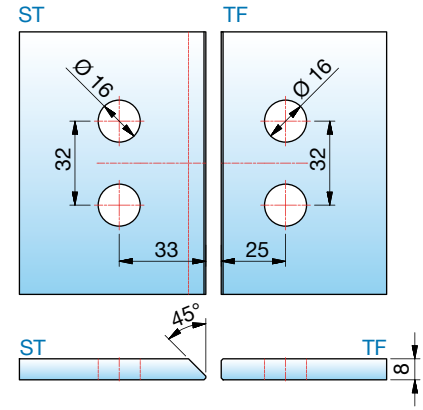

mounted on the right,
opening inwards 135°



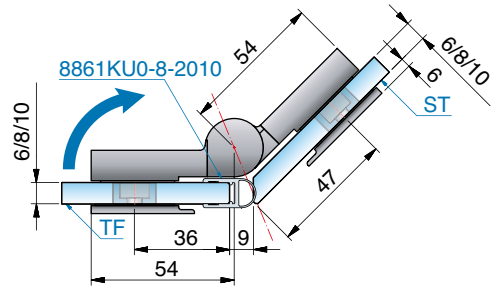

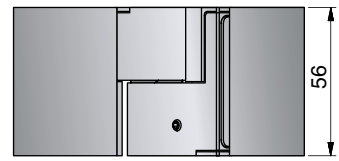

all dimensions/sealing profiles shown
apply to 8 mm glass.

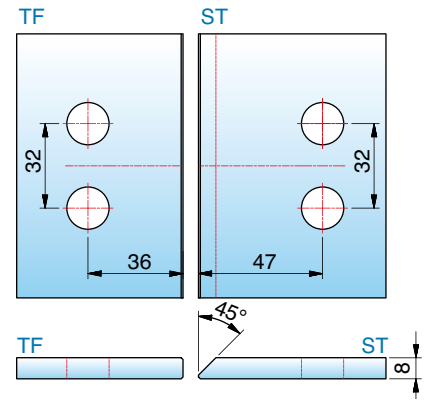

article no.	finish	glass thickness	article description	features	pu/pieces
8365ZN5-L	gloss chrome	6/8/10 mm	NIVELLO striker hinge with lifting function, glass-glass 135°	glass fastening with counter plate, concealed screws with cover cap, mountable in both situations, closed position adjustable	1/2
8365ZN1-L	matt chrome				
8365ZNPVD22-L	stainless steel optic				

ST = side panel I TF = door panel

mounted on the right,
opening outwards 180°
(resting position)



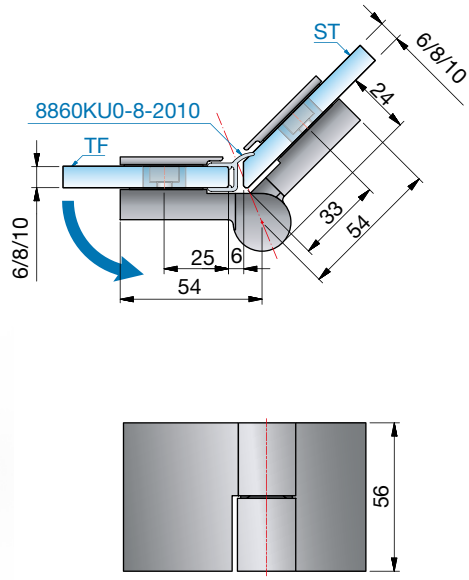

all dimensions/sealing profiles shown
apply to 8 mm glass.

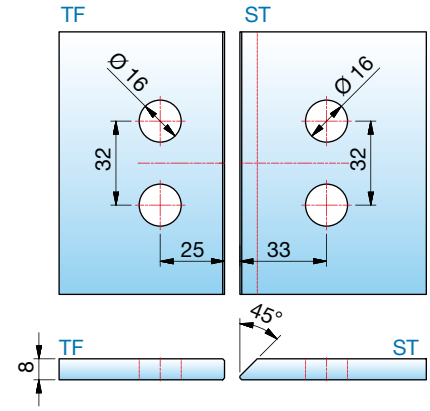

mounted on the left,
opening inwards 135°



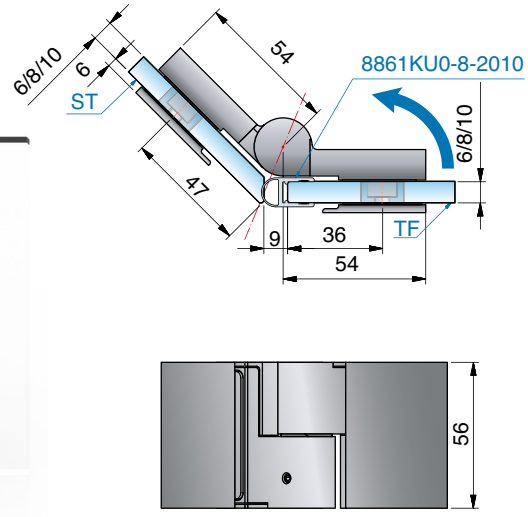

all dimensions/sealing profiles shown
apply to 8 mm glass.

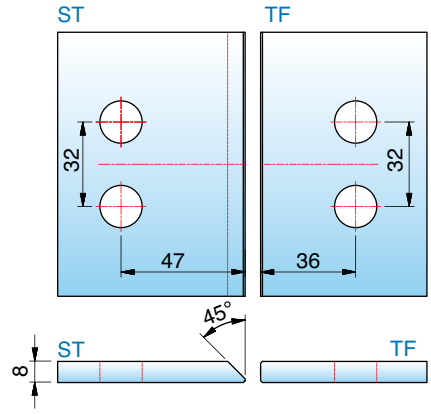

article no.	finish	glass thickness	article description	features	pu/pieces
8365ZN5-R	gloss chrome	6/8/10 mm	NIVELLO striker hinge with lifting function, glass-glass 135°	glass fastening with counter plate, concealed screws with cover cap, mountable in both situations, closed position adjustable	1/2
8365ZN1-R	matt chrome				
8365ZNPVD22-R	stainless steel optic				

ST = side panel I TF = door panel

NIVELLO striker hinge – with counter plate

mounted on the left,
opening inwards 90°

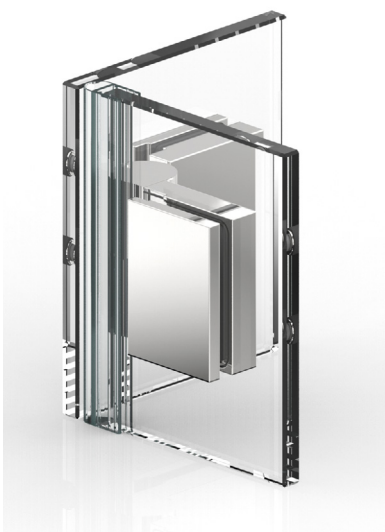

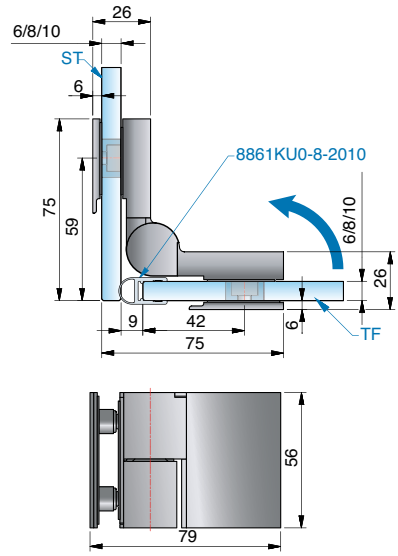

all dimensions/sealing profiles shown
apply to 8 mm glass.

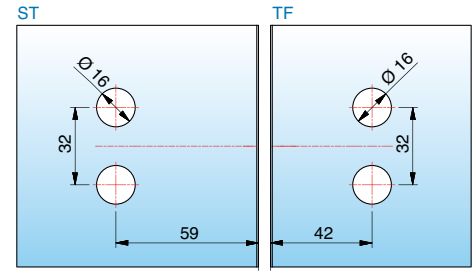

article no.	finish	glass thickness	article description	features	pu/pieces
8367ZN5-L	gloss chrome	6/8/10 mm	NIVELLO striker hinge with lifting function, glass-glass 90°	glass fastening with counter plate, concealed screws with cover cap, closed position adjustable	1/2
8367ZN1-L	matt chrome				
8367ZNPVD22-L	stainless steel optic				

mounted on the right,
opening inwards 90°



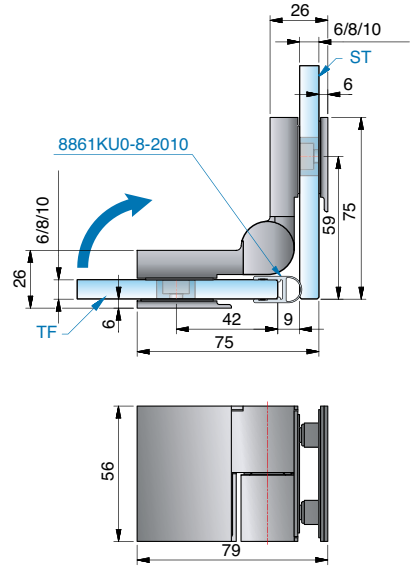

all dimensions/sealing profiles shown
apply to 8 mm glass.

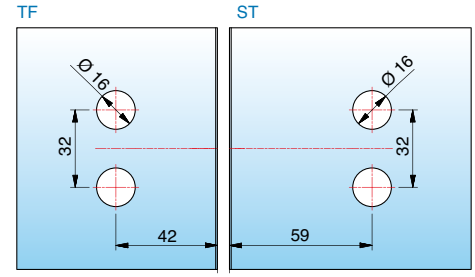

article no.	finish	glass thickness	article description	features	pu/pieces
8367ZN5-R	gloss chrome	6/8/10 mm	NIVELLO striker hinge with lifting function, glass-glass 90°	glass fastening with counter plate, concealed screws with cover cap, closed position adjustable	1/2
8367ZN1-R	matt chrome				
8367ZNPVD22-R	stainless steel optic				

ST = side panel I TF = door panel

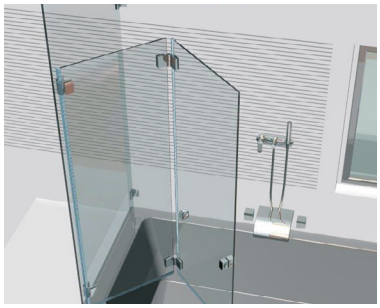

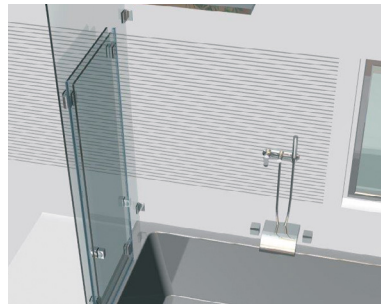



- various folding systems possible

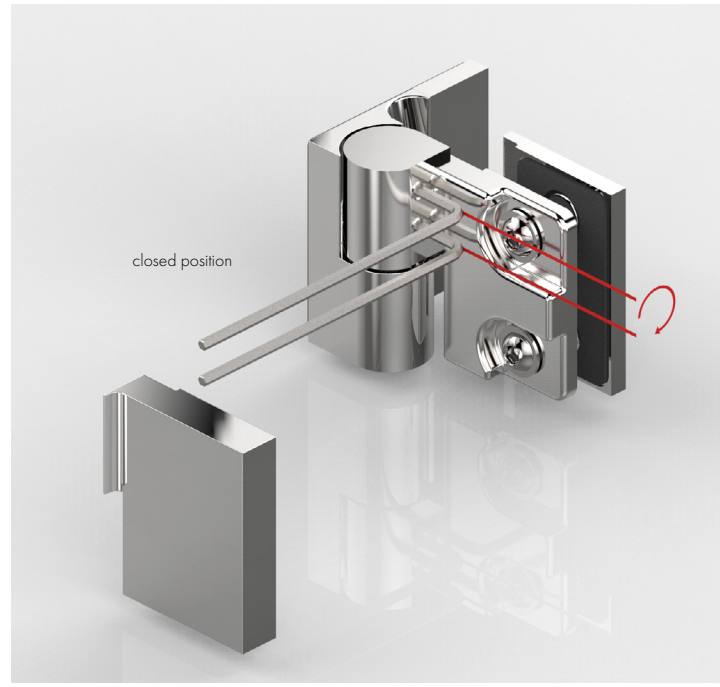

- fully adjustable closed position





- hinges individually usable depending on the situation – mounting plate inside or outside

We recommend to install all available striker hinges with sealing profiles to avoid damage to the glass.
Please note that the instruction manual can be found on page 382.



corresponding angle brackets

for FLUTURE can be found on page 168.

our service for you!

On **www.pauli.de**, you can find many different measurement sheets for all standard installations.

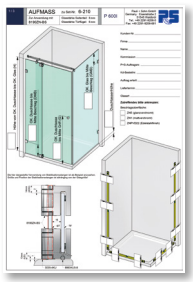

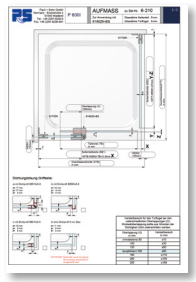

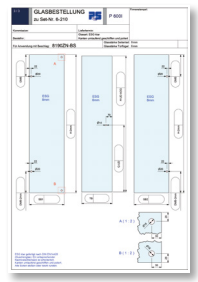

MADE IN GERMANY



shower door hinge set FLUTURE



MADE IN GERMANY

FLUTURE - stylish: aesthetic and functional

FLUTURE stands for beauty and functionality, from self-regulated closing on the last few centimeters up to an adjustable closed position. A further speciality of FLUTURE is the clamping on the door panel. This allows a continuously adjustable overlapping, equalizing existing tolerances on site very comfortably.

- closed position fully adjustable ± 6°
- quick and easy assembling due to free positioning of the overlap, simple tolerance compensation
- minimal glass work: one hole per fitting on the side panel and no holes needed on the door panel (except for door handle)
- opening angle outwards 180° (according to different sets)
- glass thickness: 6 and 8 mm, combinded thicknesses possible
- load capacity (2 hinges): 36 kg
  corresponds to a maximum glass door size of 900 x 2000 mm with a glass thickness of 8 mm
- the durability of the hardware has been tested internally according to DIN EN 14428:2015 5.5.

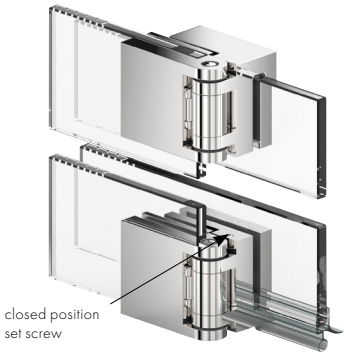

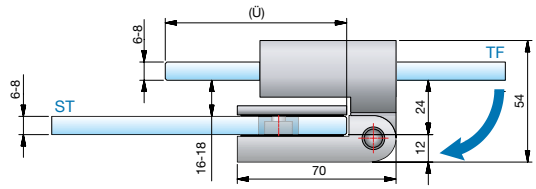

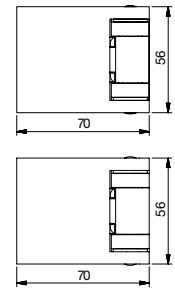

glass processing for 6/8 mm glass

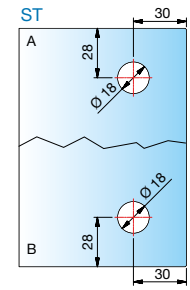

article no.	finish	glass thickness	article description	features	pu/pieces
8190ZN5-BS	gloss chrome	6/8 mm	shower door hinge set FLUTURE overlapping, glass-glass 180°	opening outwards 180° use with splash guard and water deflector profile 8863	1/2
8190ZN1-BS	matt chrome				
8190ZNPVD22-BS	stainless steel optic				



holes e.g.
for angle bracket
8187ZN

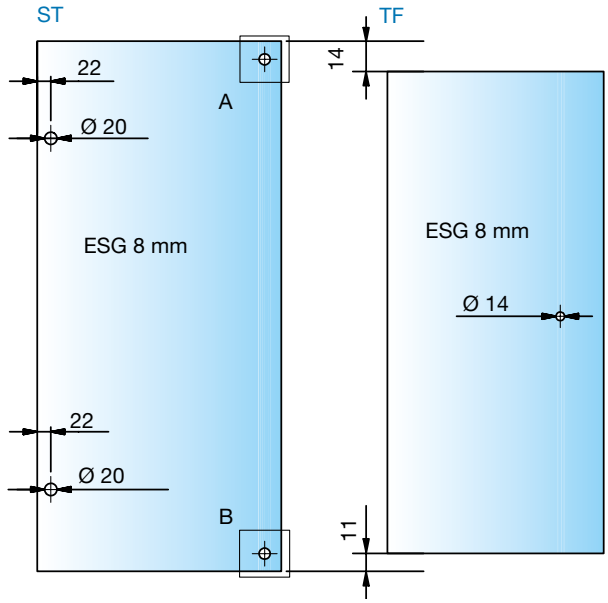

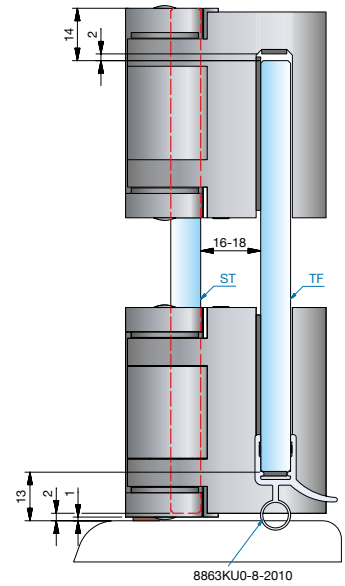

adjustment range for the door panel with different overlaps (Ü).
the minimum overlapping should not be exceeded.

overlap (Ü) in mm		adjustable in mm
minimum	80	± 10
	100	± 30
	120	± 50
recommended	150	± 80
	180	± 110
	200	± 130
	250	± 180







ST = side panel I TF = door panel I Ü = overlap I ESG = thermally tempered glass

shower door hinge set - FLUTURE

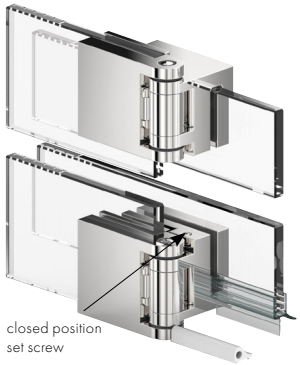

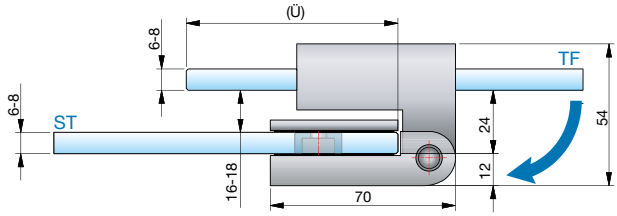

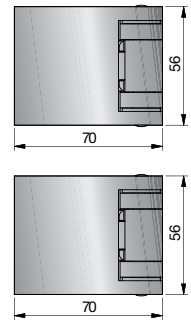

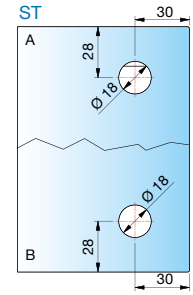

glass processing for 6/8 mm glass

FLUTURE

article no.	finish	glass thickness	article description	features	pu/pieces
8192ZN5-BS	gloss chrome	6/8 mm	shower door hinge set FLUTURE overlapping, glass-glass 180° for assembling with splash guard	opening outwards 180° use with splash guard and water deflector profile 8866	1/2
8192ZN1-BS	matt chrome				
8192ZNPVD22-BS	stainless steel optic				

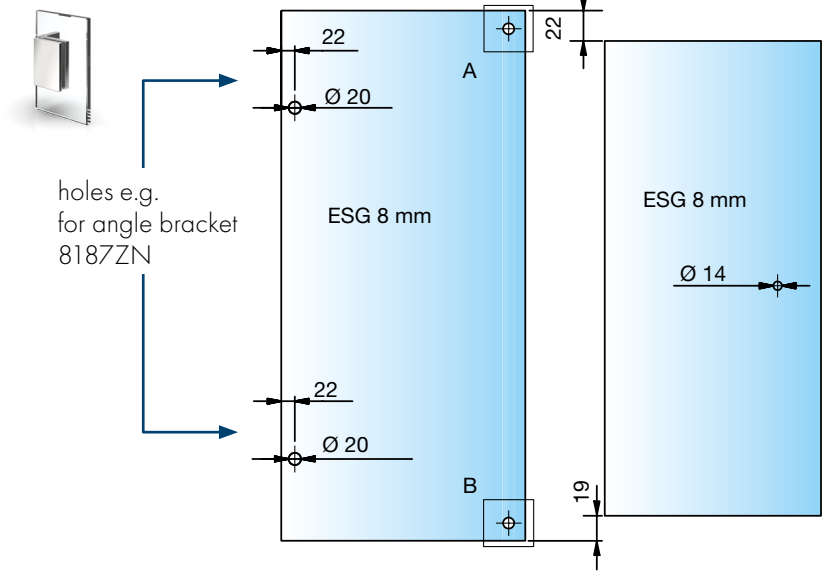

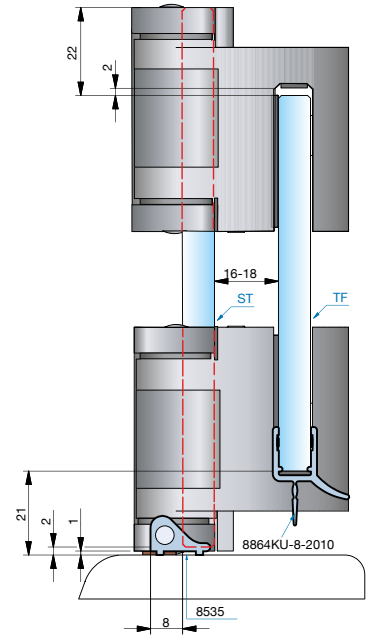

adjustment range for the door panel with different overlaps (Ü). the minimum overlapping should not be exceeded.

overlap (Ü) in mm		adjustable in mm
minimum	80	± 10
	100	± 30
	120	± 50
recommended	150	± 80
	180	± 110
	200	± 130
	250	± 180







ST = side panel I TF = door panel I Ü = overlap







- one sided opening 180° outwards
- easy cleaning due to completely outwards opening door panel

Please note that the instruction manual can be found on page 382.

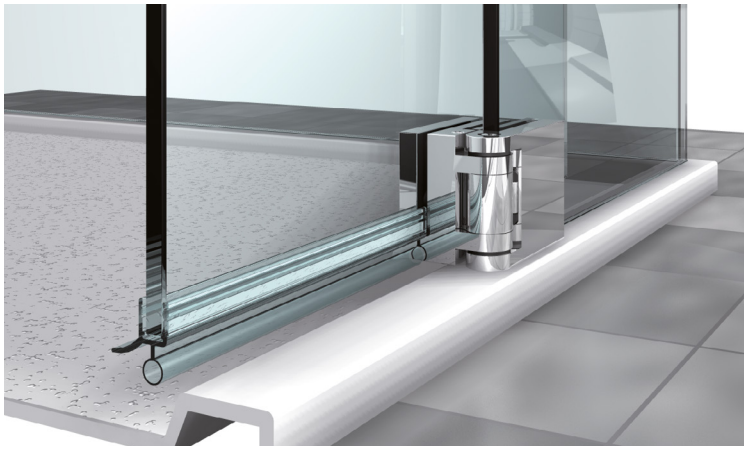

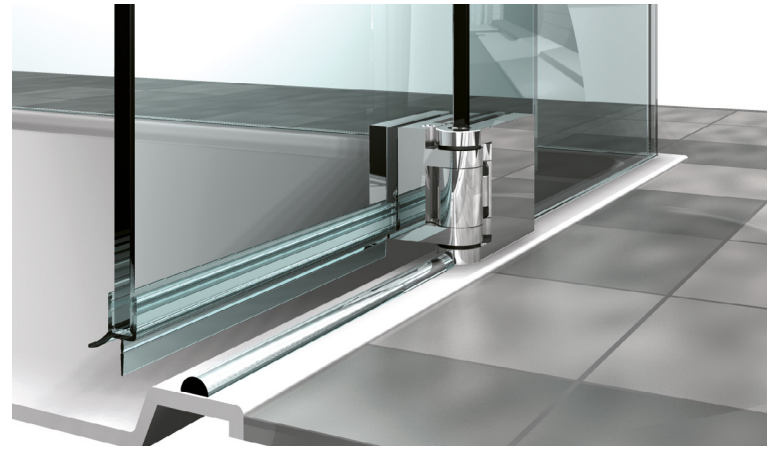

- optimized for constructions with or without splash guard

angle bracket for FLAMEA, FARDELLO, FLINTER, NIVELLO and FLUTURE



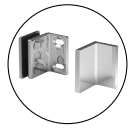

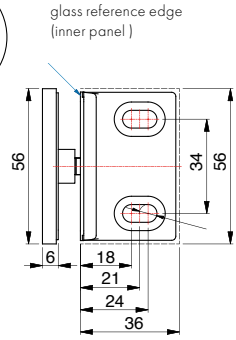

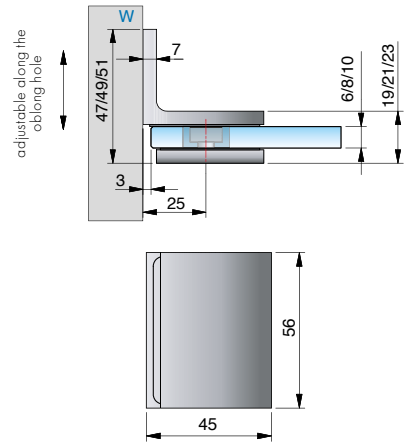

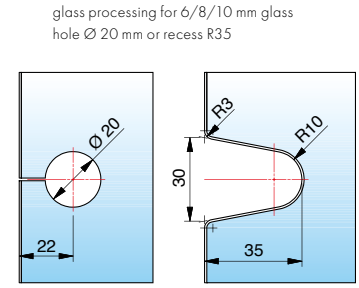

article no.	finish	glass thickness	article description	features	pu/pieces
8187ZN5	gloss chrome	6/8/10 mm	angle bracket, glass-wall 90°	wall mounting with oblong hole with cover plate	1/2
8187ZN1	matt chrome				
8187ZNPVD22	stainless steel optic				
8187ZNPVD35	black matt				
8187ZN135	deep black matt				



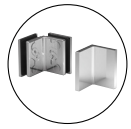

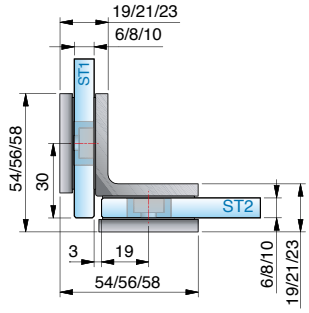

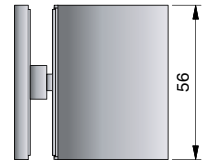

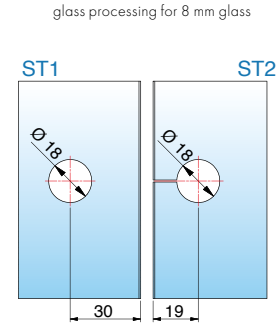

article no.	finish	glass thickness	article description	features	pu/pieces
8188ZN5	gloss chrome	6/8/10 mm	angle bracket, glass-glass 90°	with cover plate	1/2
8188ZN1	matt chrome				
8188ZNPVD22	stainless steel optic				
8188ZNPVD35	black matt				

ST = side panel I TF = door panel I W = wall

angle bracket for FLAMEA, FARDELLO, FLINTER, NIVELLO and FLUTURE



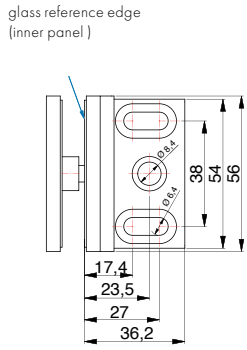

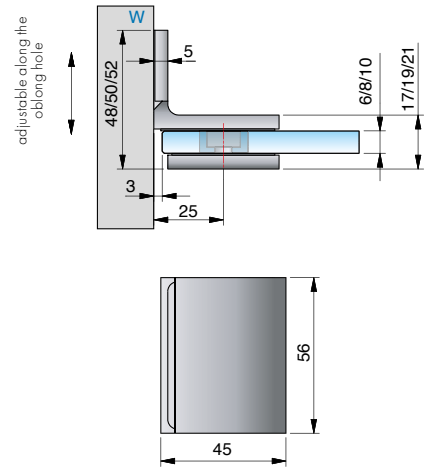

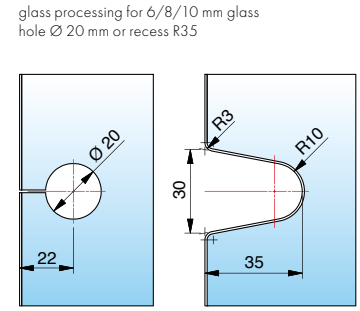

article no.	finish	glass thickness	article description	features	pu/pieces
8170ZN5	gloss chrome	6/8/10 mm	angle bracket, glass-wall 90°	wall mounting with oblong hole with cover plate	1/2
8170ZN1	matt chrome				
8170ZNPVD22	stainless steel optic				
8170ZNPVD35	black matt				
8170ZN135	deep black matt				



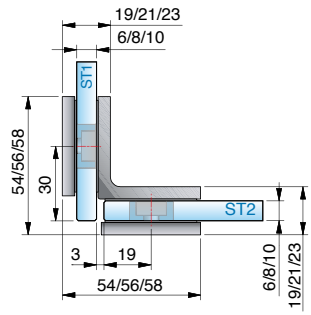

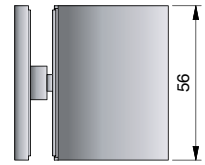

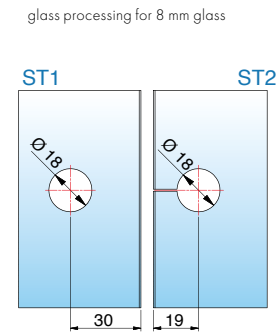

article no.	finish	glass thickness	article description	features	pu/pieces
8172ZN5	gloss chrome	6/8/10 mm	angle bracket, glass-glass 90°		1/2

angle bracket for FLAMEA, FARDELLO, FLINTER, NIVELLO and FLUTURE



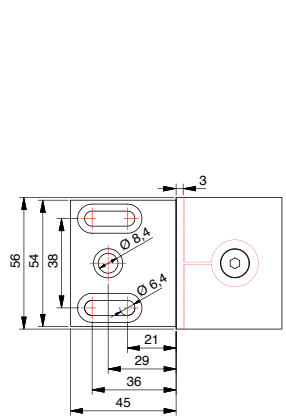

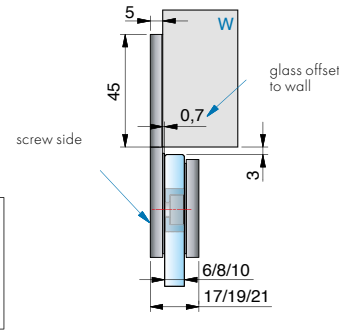

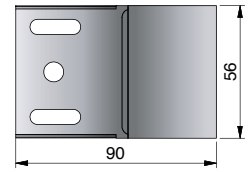

glass processing for 6/8/10 mm glass
hole Ø 20 mm or recess R35

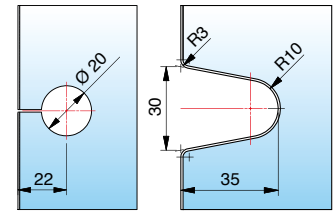

article no.	finish	glass thickness	article description	features	pu/pieces
8174ZN5	gloss chrome	6/8/10 mm	inline connector, glass-wall 180°	wall mounting with oblong hole with cover plate	1/2
8174ZN1	matt chrome				
8174ZNPVD22	stainless steel optic				
8174ZNPVD35	black matt				



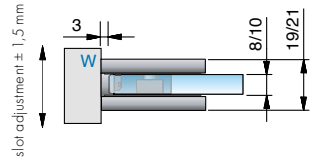

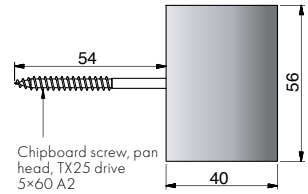

glass processing for 8/10 mm glass
glass processing: recess R30

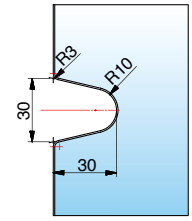

article no.	finish	glass thickness	article description	features	pu/pieces
8178ZN5	gloss chrome	6/8/10 mm	inline connector, glass-wall 90°	wall mounting with oblong hole with cover plate without visible mounting plate mounting screw included	1/2
8178ZN1	matt chrome				
8178ZNPVD22	stainless steel optic				
8178ZNPVD35	black matt				

angle bracket for FLAMEA, FARDELLO, FLINTER, NIVELLO and FLUTURE



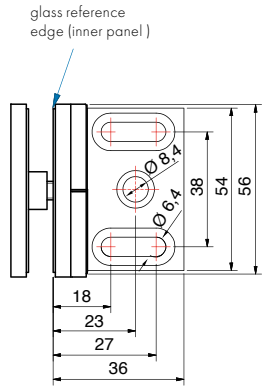

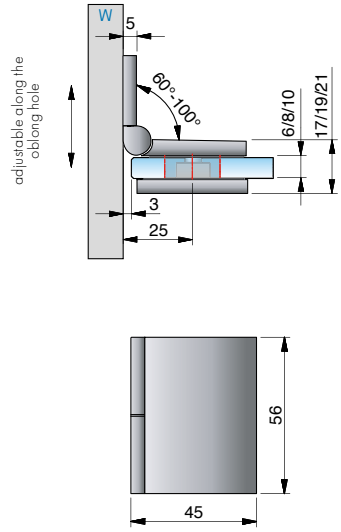

glass processing for 8 mm glass

for other angles, the miter angle and/or the hole distance changes accordingly – seetable below

hole Ø 20 mm or recess R35

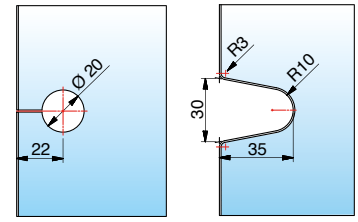

at 90° at 75°-100°

article no.	finish	glass thickness	article description	features	pu/pieces
8171ZN5	gloss chrome	6/8/10 mm	inline connector, glass-wall 90°	wall mounting with oblong hole with cover plate, degree of angle is fully adjustable between 60°-100°	1/2
8171ZN1	matt chrome				
8171ZNPVD22	stainless steel optic				
8171ZNPVD35	black matt				

miter angle and hole distances for 8171ZN

corner	hole distance from glass edge	miter angle	remarks
60°	29 mm	30°	-
65°	28 mm	25°	-
70°	26 mm	20°	-
75°	25 mm	15°	hole slotted
80°	24 mm	10°	hole slotted
85°	23 mm	5°	hole slotted
90°	22 mm	without miter	hole slotted
95°	21 mm	5°	hole slotted
100°	21 mm	10°	hole slotted

angle bracket for FLAMEA, FARDELLO, FLINTER, NIVELLO and FLUTURE



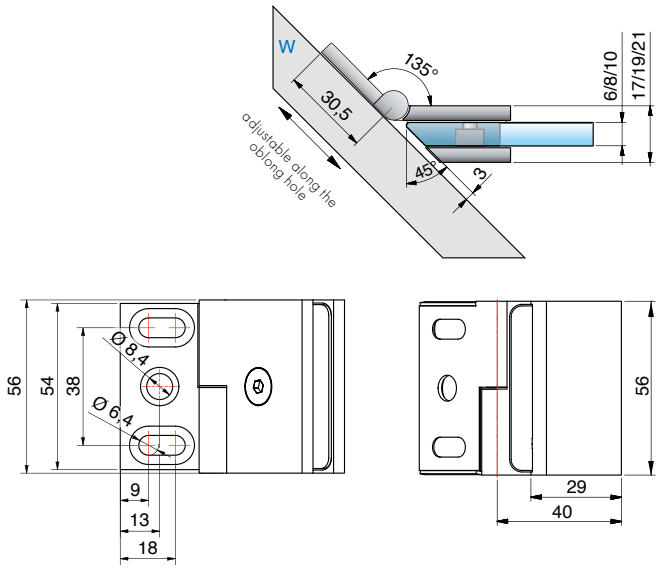

glass processing for 8 mm glass

for other angles, the miter angle and/or the hole distance changes accordingly – see table above

recess R30 at 135°

hole dimension at 100°

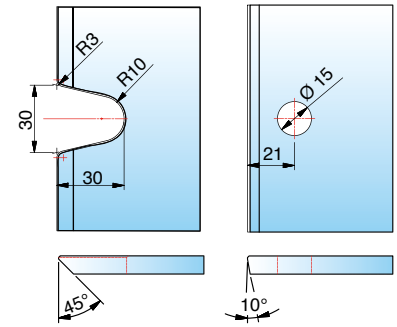

at 125°-140°

at 100°-125°

article no.	finish	glass thickness	article description	features	pu/pieces
8173ZN5	gloss chrome	6/8/10 mm	inline connector, glass-wall 135°	wall mounting with oblong hole with cover plate, degree of angle is fully adjustable between 100°-140°	1/2
8173ZN1	matt chrome				
8173ZNPVD22	stainless steel optic				
8173ZNPVD35	black matt				

miter angle and hole distances for 8173ZN

corner	hole distance from glass edge	miter angle	remarks
100°	21 mm	10°	hole slotted
105°	20 mm	15°	
110°	19 mm	20°	
115°	19 mm	25°	
120°	18 mm	30°	
125°	17 mm	35°	hole slotted o. edge recess R30
130°	-	40°	edge recess R30
135°	-	45°	edge recess R30
140°	-	50°	edge recess R30

ST = side panel TF = door panel W = wall

angle bracket for FLAMEA, FARDELLO, FLINTER, NIVELLO and FLUTURE



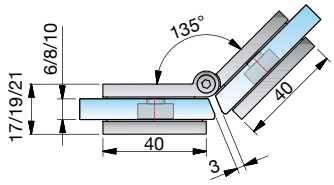

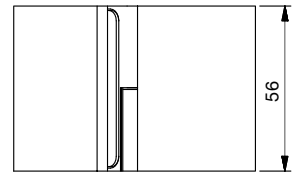

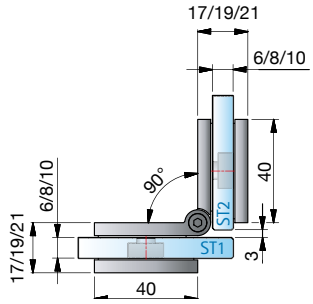

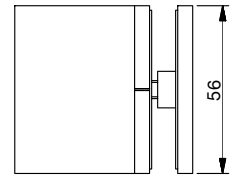

glass processing for 8 mm glass

for other angles, the miter angle and/or the hole distance changes accordingly – see table below.

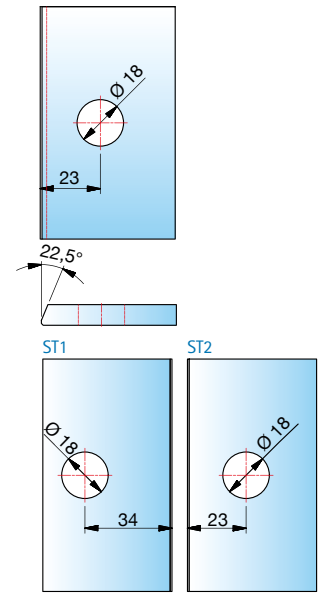

article no.	finish	glass thickness	article description	features	pu/pieces
8175ZN5	gloss chrome	6/8/10 mm	inline connector, glass-wall 135°	degree of angle is fully adjustable between 80°-180°	1/2
8175ZN1	matt chrome				
8175ZNPVD22	stainless steel optic				
8175ZNPVD35	black matt				

miter angle and hole distances for 8175ZN

corner	hole distance from glass edge	miter angle	remarks
80°	32 mm	50°	-
85°	31 mm	47,5°	-
90°	30 mm	45°	-
95°	29 mm	42,5°	-
100°	28 mm	40°	hole slotted
105°	27 mm	37,5°	hole slotted
110°	26 mm	35°	hole slotted
115°	26 mm	32,5°	hole slotted
120°	25 mm	30°	hole slotted
125°	24 mm	27,5°	hole slotted
130°	24 mm	25°	hole slotted

corner	hole distance from glass edge	miter angle	remarks
135°	23 mm	22,5°	hole slotted
140°	23 mm	20°	hole slotted
145°	22 mm	17,5°	hole slotted
150°	22 mm	15°	hole slotted
155°	21 mm	12,5°	hole slotted
160°	21 mm	10°	hole slotted
165°	20 mm	7,5°	hole slotted
170°	20 mm	5°	hole slotted
175°	19 mm	0°	hole slotted
180°	19 mm	0°	hole slotted

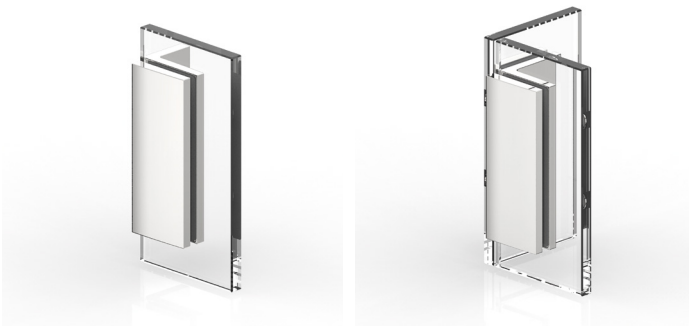

corresponding angle brackets

for TURA can be found on page 186.

MADE
IN
GERMANY



TURA heavy-duty striker door hinge



fantastic solutions for large all-glass applications

MADE IN GERMANY

The trend in light-flooded rooms and spacious bathrooms and also bath landscapes, continues unabated. The result is that allglass doors must have a higher load capacity due to their larger dimensions and greater weight. Pauli + Sohn has developed the special heavy-duty hinge "TURA" for this requirement.

- load capacity (2 hinges):
  max. permissible weight: 70 kg
  max. door panel width: 1200 mm
  max door panel height: 2700 mm
- striker door hinge: glass–wall / glass–glass
- matching corner brackets
- fully adjustable closed position
- self-closing during the last 15 - 20°
- hinge height 122 mm
- continuous seal
- areas of application: wellness area, barrier-free bathrooms, public projects

oversizes with folding systems without risk of over opening

load capacity for system width 1200 mm: 70 kg

corresponds to a door height of 2330 mm with 10 mm glass
corresponds to a door height of 2700 mm with 8 mm glass

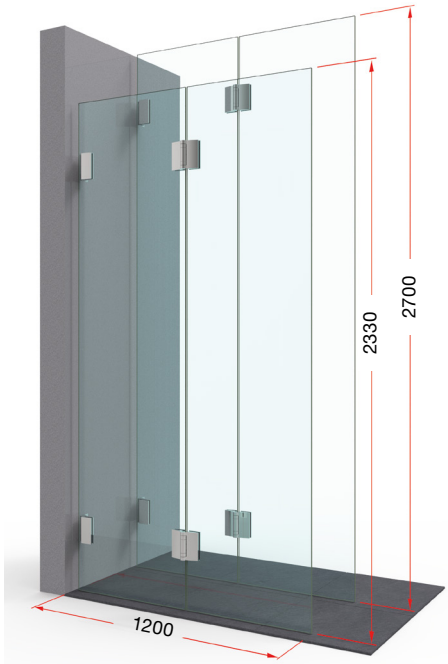

load capacity for system width 1300 mm: 62 kg

corresponds to a door height of 1900 mm with 10 mm glass
corresponds to a door height of 2380 mm with 8 mm glass

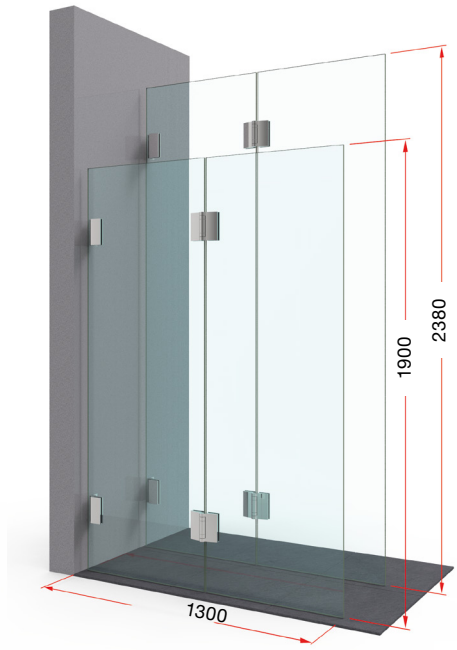

load capacity for system width 1400 mm: 54 kg

corresponds to a door height of 1540 mm with 10 mm glass
corresponds to a door height of 1930 mm with 8 mm glass

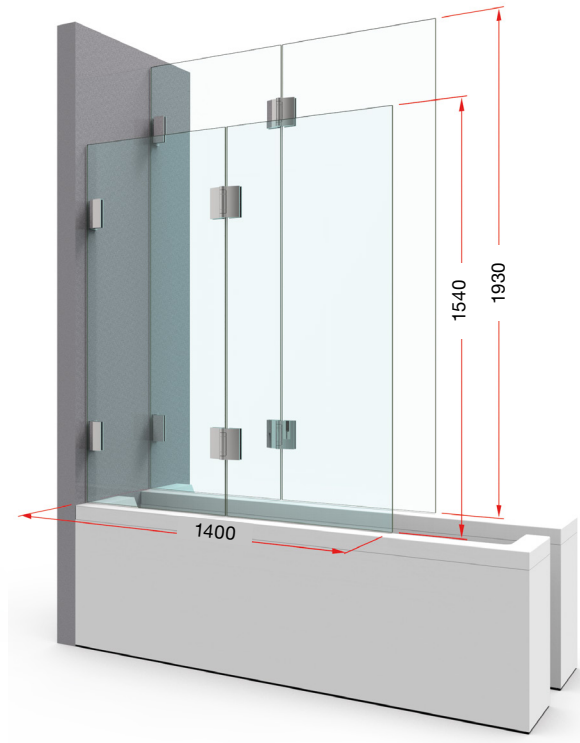



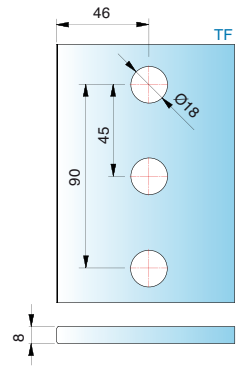

We recommend to install all available striker hinges with sealing profiles to avoid damage to the glass.
Please note that the instruction manual can be found on page 382.

- three holes in the glass allow for higher load capacity
- for wall mounting we offer extra long DIN9135 screws.

dimensions wall mounting

8962ZN

opening outwards

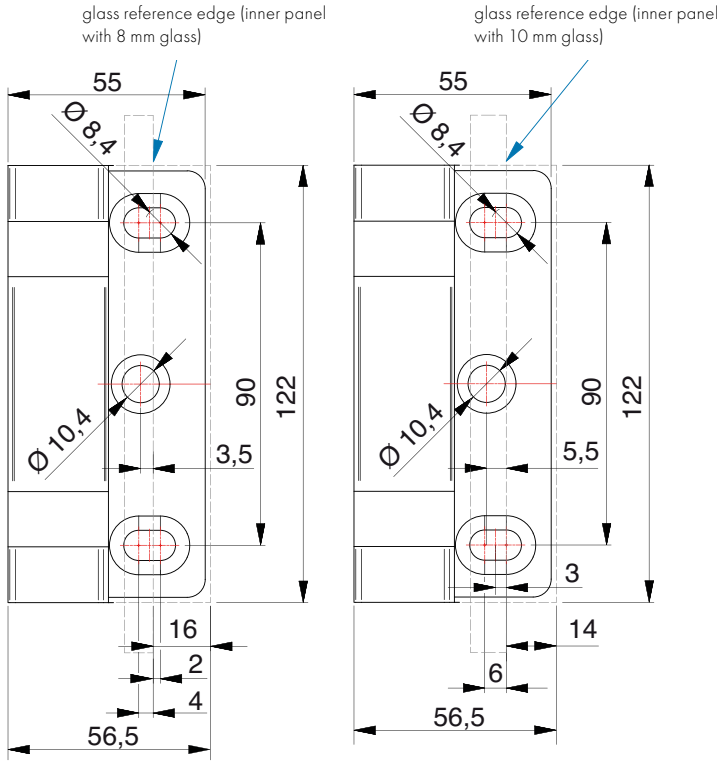

8961ZN

opening outwards/ inwards

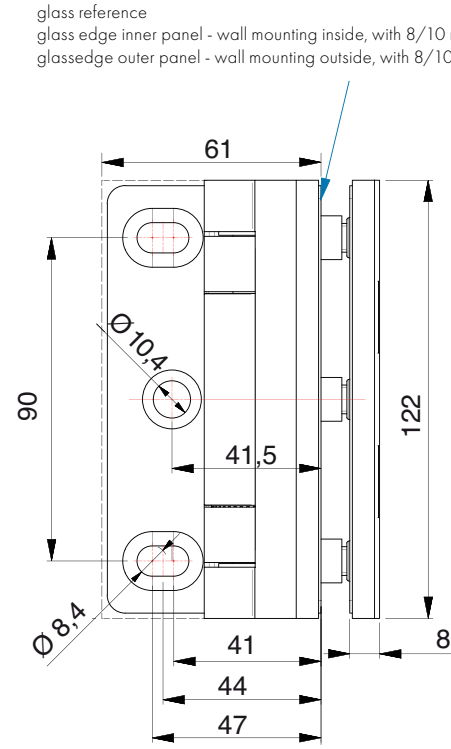

accessories - screws

chipboard screw DIN9135

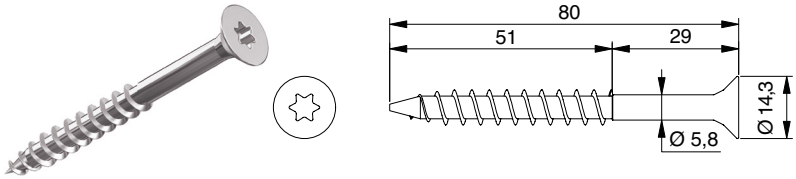

article no.	features
Z100VA	countersink head, TX40 drive 8x80 A2

article no.	features
Z101VA	countersink head, TX40 drive 8x100



for 8 mm glass

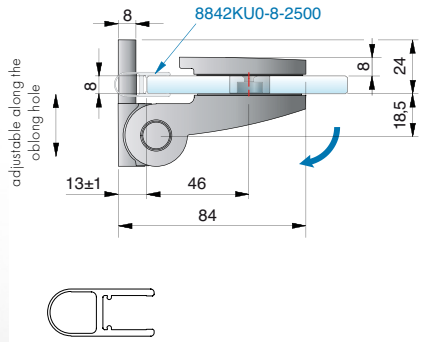

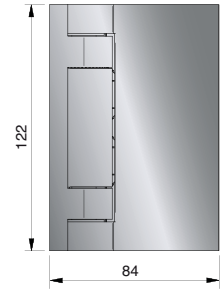

glass processing for 8 mm with sealing profile
8842KU0-8-2500

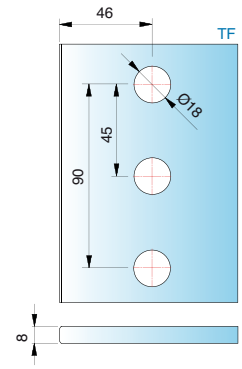

for 10 mm glass

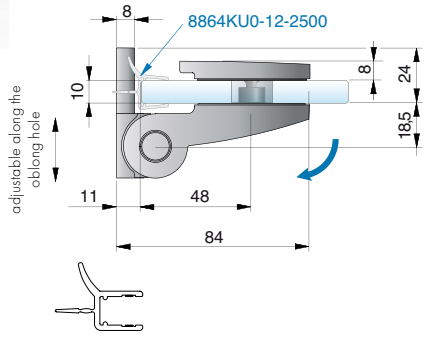

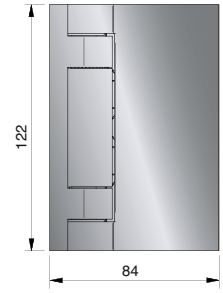

glass processing for 10 mm with sealing profile
8864KU0-12-2500

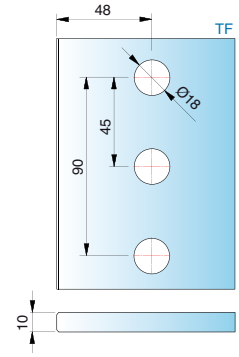

for 10 mm glass

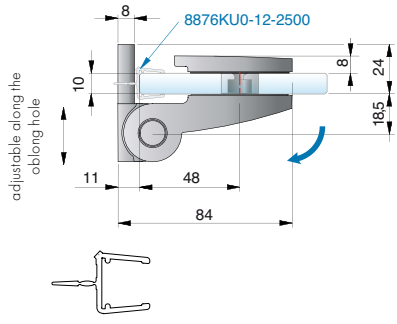

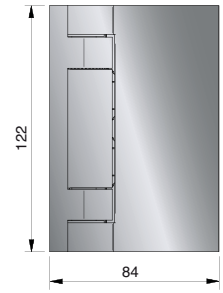

glass processing for 10 mm with sealing profile
8876KU0-12-2500

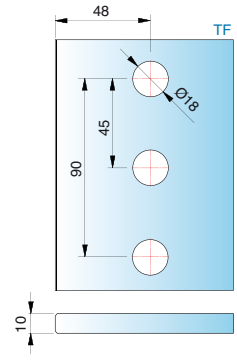

article no.	finish	glass thickness	article description	features	pu/pieces
8962ZN5	gloss chrome	8/10/12 mm	TURA heavy-duty striker door hinge glass-wall 90°	one-sided opening outwards minimum 90°, concealed screws, wall mounting inside with oblong hole, closed position adjustable, seal profile notched in hinge area	1/2
8962ZN1	matt chrome				
8962ZNPVD22	stainless steel optic				

ST = side panel I TF = door panel I W = wall

heavy-duty striker door hinge – TURA

for 8 mm glass

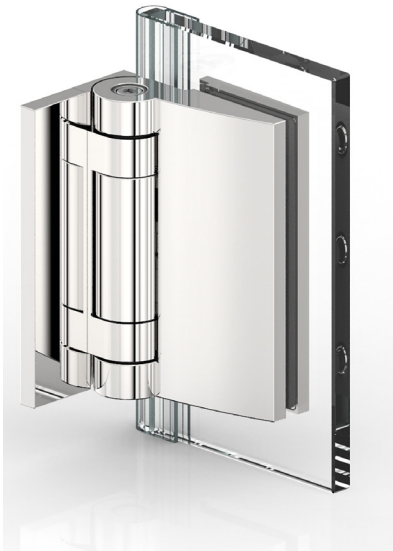

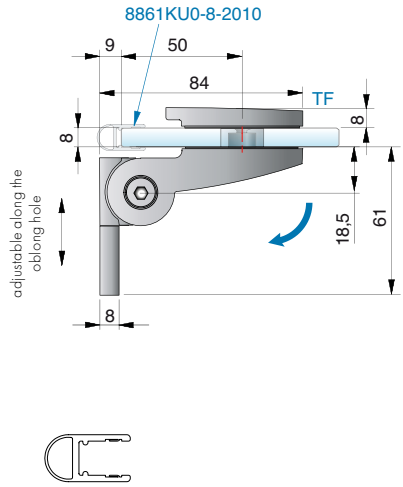

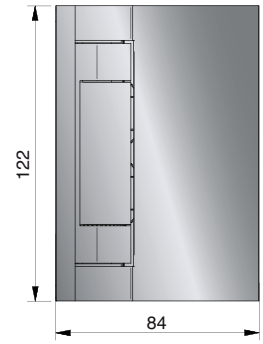

glass processing for 8 mm with sealing profile 8861KU0-8-2010

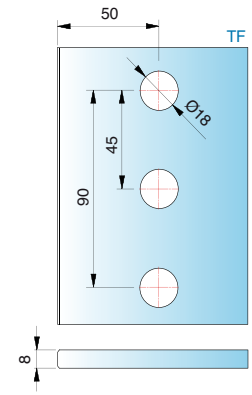

for 10 mm glass

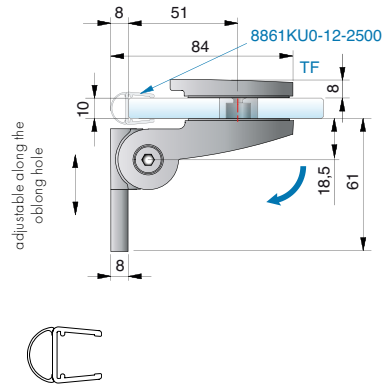

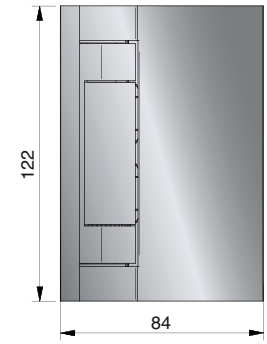

glass processing for 10 mm with sealing profile 8861KU0-12-2500

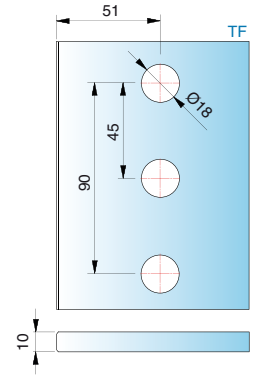

article no.	finish	glass thickness	article description	features	pu/pieces
8961ZN5	gloss chrome	8/10/12 mm	TURA heavy-duty striker door hinge glass-wall 90°	one-sided opening outwards 90°, concealed screws, wall mounting outside with oblong hole, closed position adjustable, seal profile in hinge area continuous	1/2
8961ZN1	matt chrome				
8961ZNPVD22	stainless steel optic				

for 8 mm glass



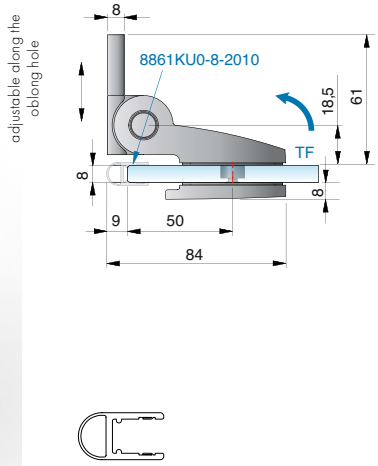

glass processing for 8 mm
with sealing profile
8861KU0-8-2010

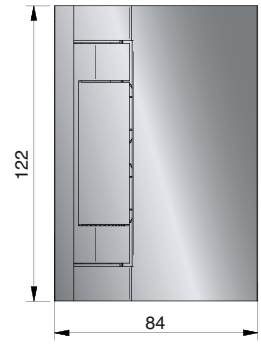

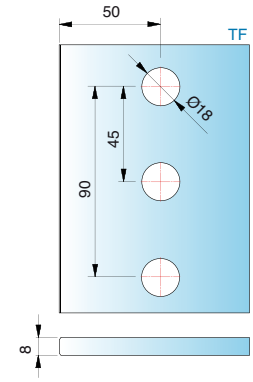

for 10 mm glass

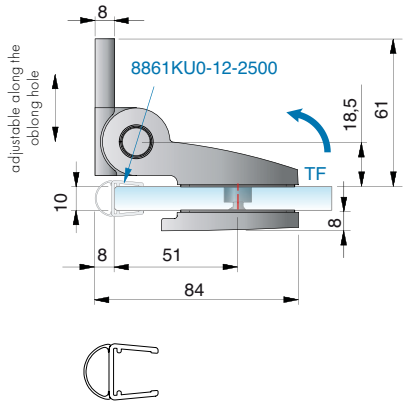

glass processing for 10 mm
with sealing profile
8861KU0-12-2500

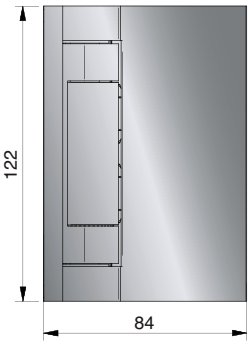

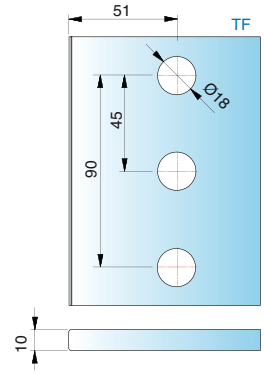

article no.	finish	glass thickness	article description	features	pu/pieces
8961ZN5	gloss chrome	8/10/12 mm	TURA heavy-duty striker door hinge glass-wall 90°	one-sided opening inwards 90°, concealed screws, wall mounting outside with oblong hole, closed position adjustable, seal profile in hinge area continuous	1/2
8961ZN1	matt chrome				
8961ZNPVD22	stainless steel optic				

ST = side panel I TF = door panel I W = wall

heavy-duty striker door hinge – TURA



for 8 mm glass

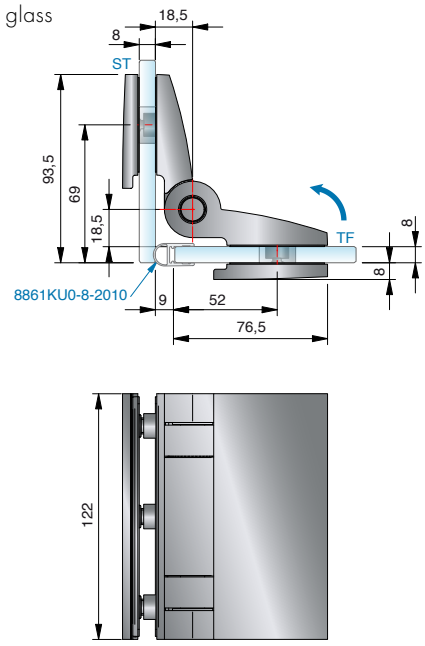

glass processing for 8 mm
with sealing profile 8861KU0-8-2010

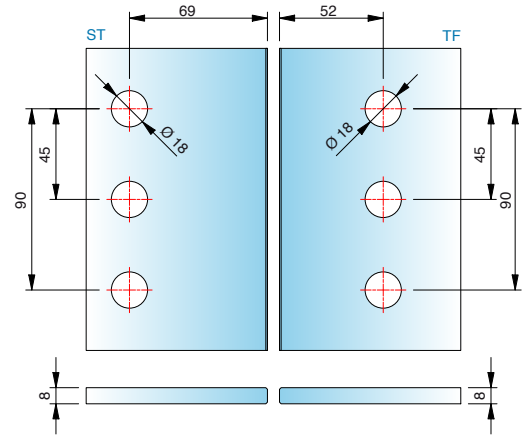



for 10 mm glass

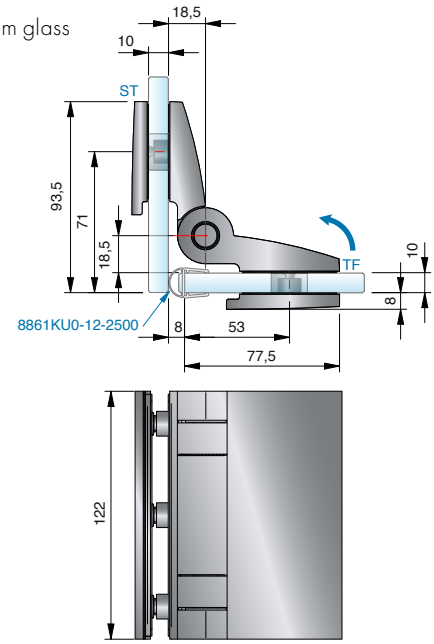

glass processing for 10 mm with
sealing profile 8861KU0-12-2500

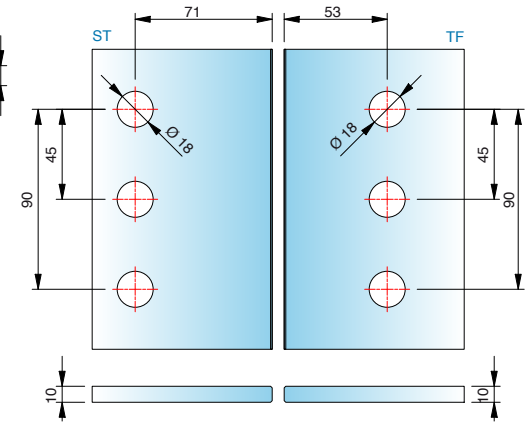

article no.	finish	glass thickness	article description	features	pu/pieces
8960ZN5	gloss chrome	8/10/12 mm	TURA heavy-duty striker door hinge glass-glass 90°	one-sided opening inwards 90°, concealed screws, closed position adjustable, seal profile in hinge area continuous	1/2
8960ZN1	matt chrome				
8960ZNPVD22	stainless steel optic				

ST = side panel I TF = door panel I W = wall

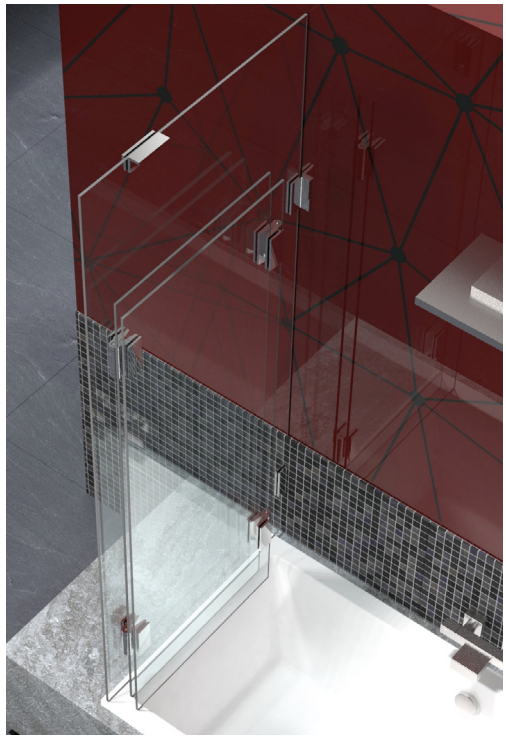

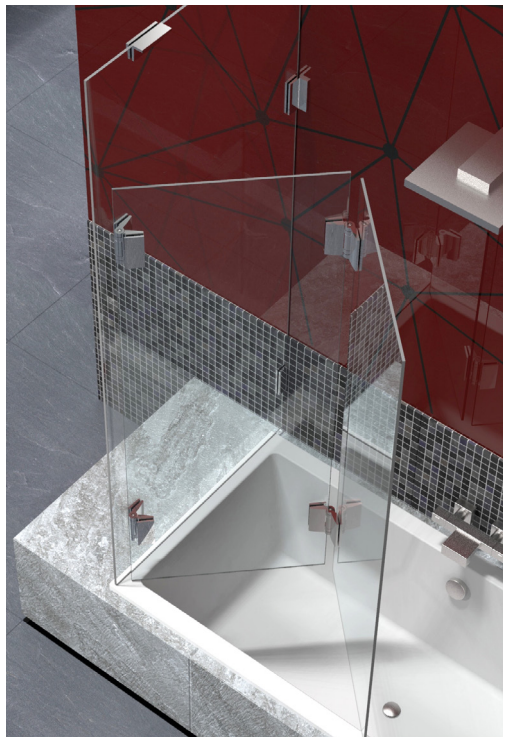



General note

- due to the system, a superficial matting may occur in the area of the rollers on the visible surface as a result of micro-scratches.



for 8 mm glass

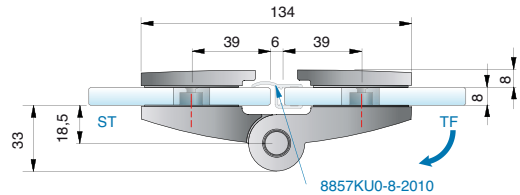

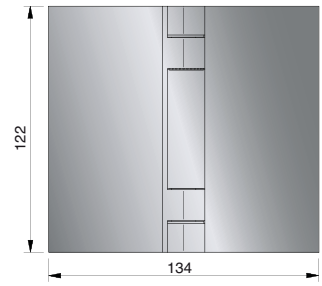

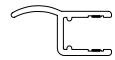

glass processing for 8 mm with sealing profile 8857KU0-8-2010

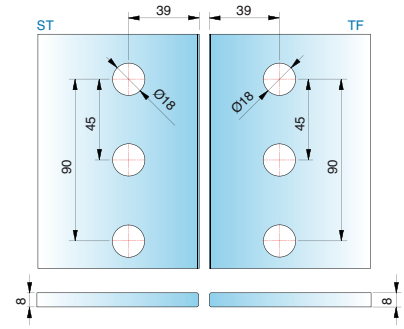

for 10 mm glass

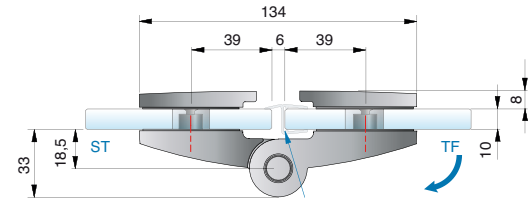

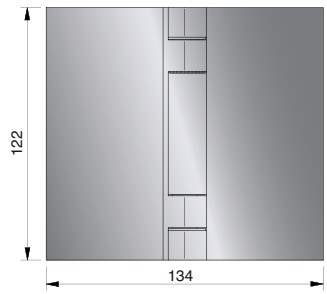

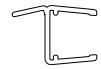

glass processing for 10 mm with sealing profile 8857KU0-12-2500

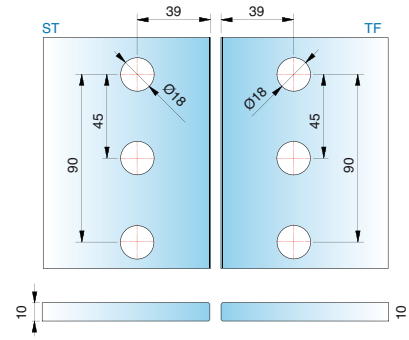

article no.	finish	glass thickness	article description	features	pu/pieces
8960ZN5 8960ZN1 8960ZNPVD22	gloss chrome matt chrome stainless steel optic	8/10/12 mm	TURA heavy-duty striker door hinge glass-glass 180°	one-sided opening out or inwards 180°, concealed screws, closed position adjustable, seal profile in hinge area continuous	1/2



for 8 mm glass

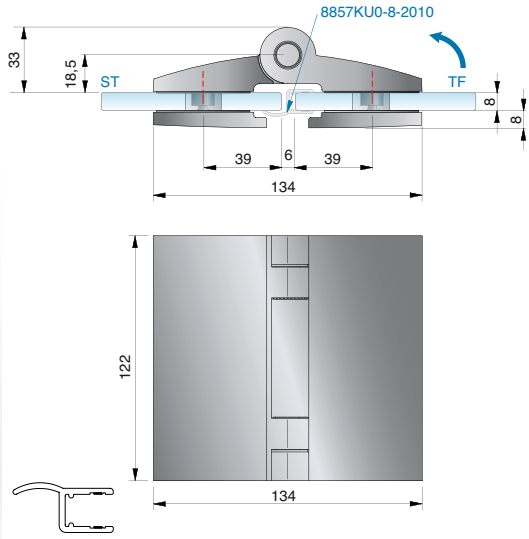

glass processing for 8 mm with sealing profile 8857KU0-8-2010

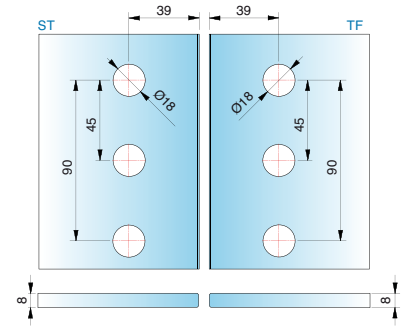

for 10 mm glass

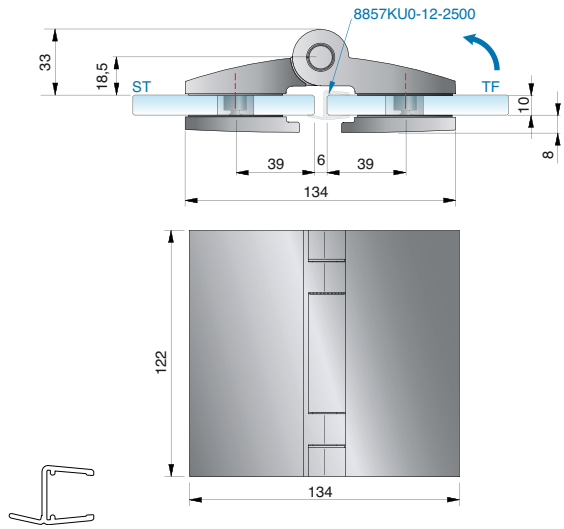

glass processing for 10 mm with sealing profile 857KU0-12-2500

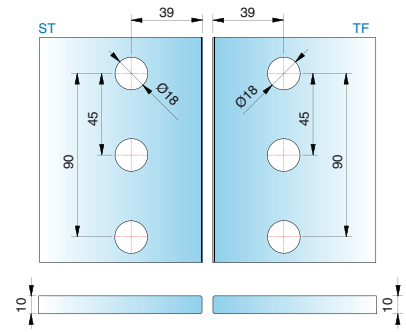

article no.	finish	glass thickness	article description	features	pu/pieces
8960ZN5	gloss chrome	8/10/12 mm	TURA heavy-duty striker door hinge glass-glass 180°	one-sided opening out or inwards 180°, concealed screws, closed position adjustable, seal profile in hinge area continuous	1/2
8960ZN1	matt chrome				
8960ZNPVD22	stainless steel optic				

ST = side panel | TF = door panel | W = wall

angle bracket – TURA

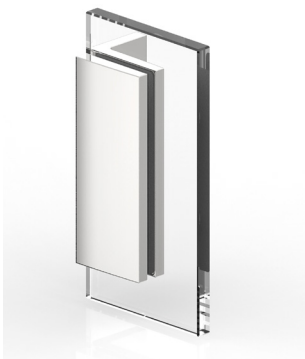

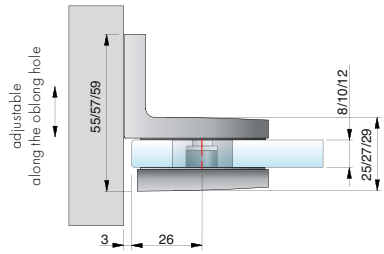

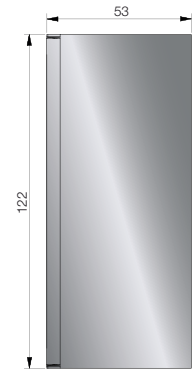

glass processing for 8/10/12 mm

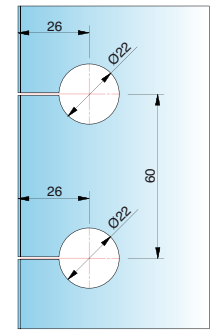

article no.	finish	glass thickness	article description	features	pu/pieces
8968ZN5	gloss chrome	8/10/12 mm	angle bracket TURA	concealed screws, wall mount	1/2
8968ZN1	matt chrome		glass-wall 90°	with oblong hole adjustment	
8968ZNPVD22	stainless steel optic				

glass reference edge (inner panel
with 8/10/12 mm glass)

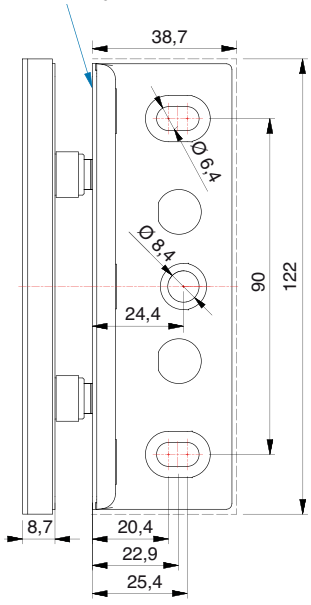

note: suitable fixing screws part no. Z092VA
see page 377





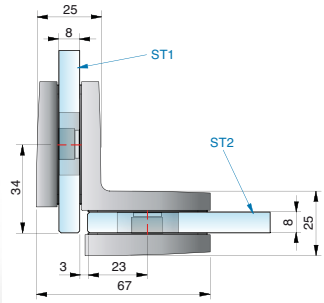

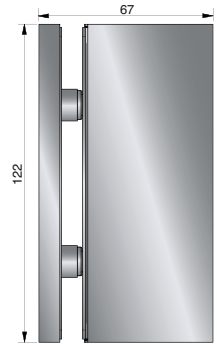

glass processing for 8 mm

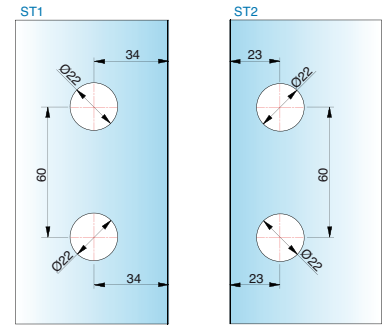

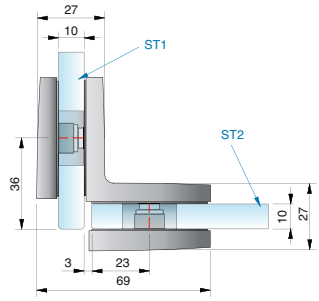

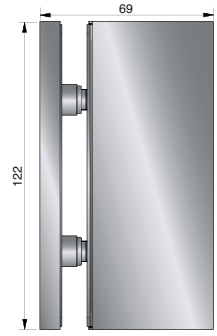

glass processing for 10 mm

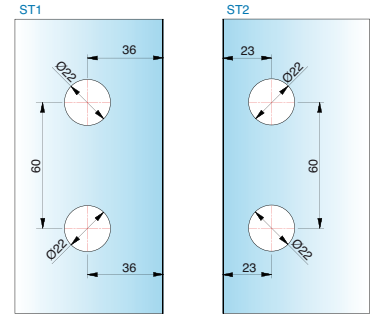

article no.	finish	glass thickness	article description	features	pu/pieces
8969ZN5	gloss chrome	8/10/12 mm	angle bracket TURA	concealed screws	1/2
8969ZN1	matt chrome		glass-glass 90°		
8969ZNPVD22	stainless steel optic				

dimensions of folding system – glass-wall

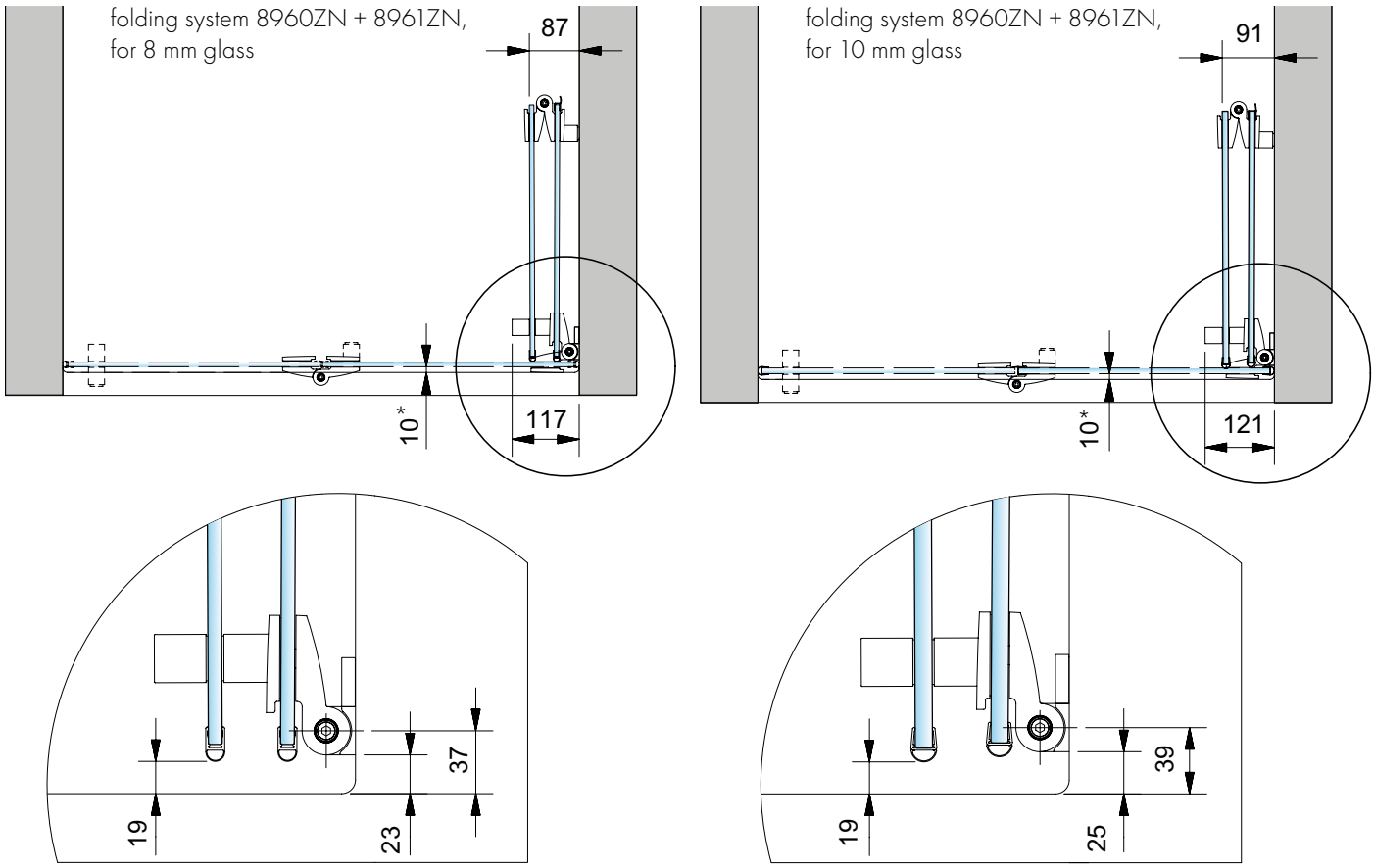

* tray offset dimension

- we recommend for the folding systems the sealing profile 8865KU0

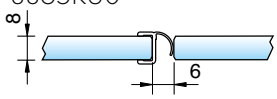

or 8857KU0.

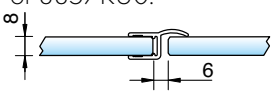

drill hole spacing for:



8273ZN



8271ZN

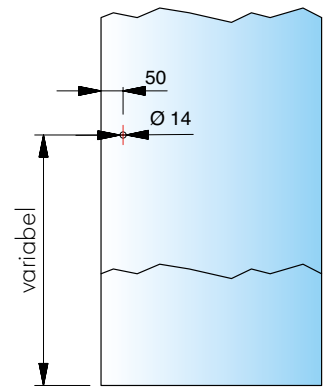

- for more information about the knobs 8271 and 8273 see page 301.

dimensions of folding system – glass-glass

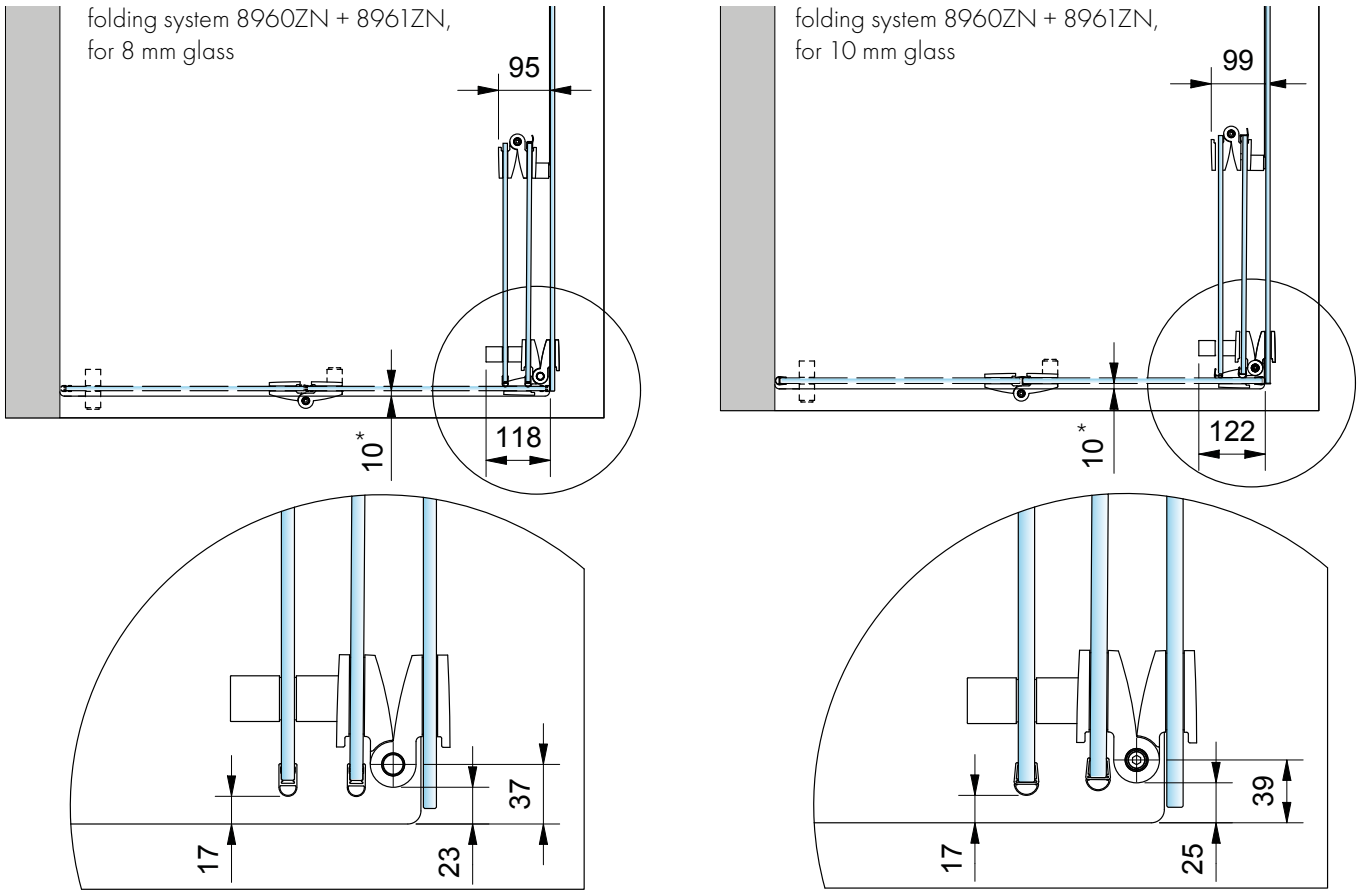

* tray offset dimension

installation instructions for the use of laminated glass panels

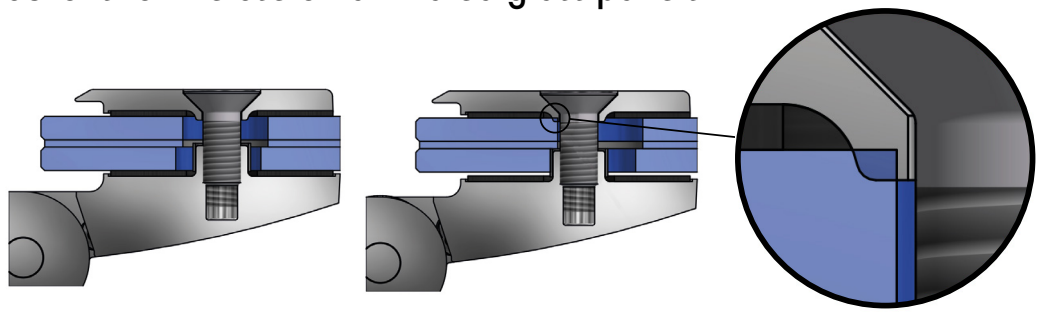

- due to the possible offset with laminated safety glass panels, it is essential to ensure that the counter plate is mounted centrally in the glass hole. Note: Incorrect installation can lead to glass breakage!



corresponding angle brackets

for TURA SN can be found on page 200.

MADE
IN
GERMANY



sauna heavy-duty striker door hinge TURA



TURA SN - versatile solutions for large all-glass installations

The new sauna series TURA-SN offers you a hardware program with very high load-bearing capacity. This allows the all-glass doors to shine with with larger dimensions and more weight.
During the production of the sauna hardware, materials are used which which meet and withstand these special requirements. This ensures its first-class functionality even at ambient temperatures of up to 100° C. This has been proven by our rigorous tests with the maximum permissible door dimensions.

- Load capacity (2 hinges): 50kg
  corresponds to a glass door panel of 1000 x 2000 mm
  with a glass thickness of 10 mm
  max.door panel width: 1000 mm
  max. door panel height: 2700 mm
- striker door hinge: glass-wall / glass-glass
- suitable angle brackets
- closed position not adjustable
- hardware height: 122 mm
- continuous seal
- areas of application:
  wellness area, barrier-free bathrooms, public areas



- glass thickness: 8/10/12 mm
- suitable angle brackets
- max. temperature at the upper hinge 80°C (corresponded to a value setting of a sauna temperature setting of 100°C)
- closed position **not** adjustable
- door fixing „**on-site**" with e.g. roller catches
- installation only with **door-stop**
- three drillings in the glass allow a higher load capacity
- or wall mounting we offer extra long DIN9135 screws - see page 201

- For the best possible protection and sealing, we recommend to install all TURA sauna hinges with the seal profile 8848-KU0-8(10)-2500.

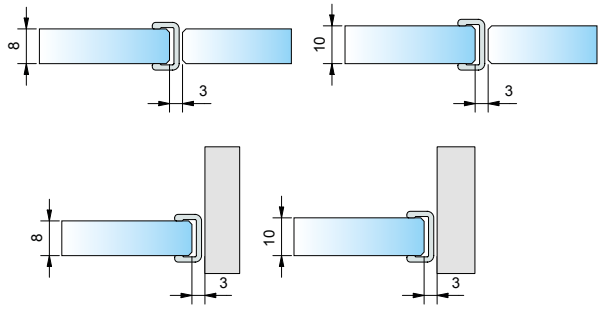



8961ZN-SN
glass-wall 90°



8962ZN-SN
glass-wall 90°





8960ZN-SN
glass-glass 90°/180°

dimensions wall mounting

8962ZN

opening outwards

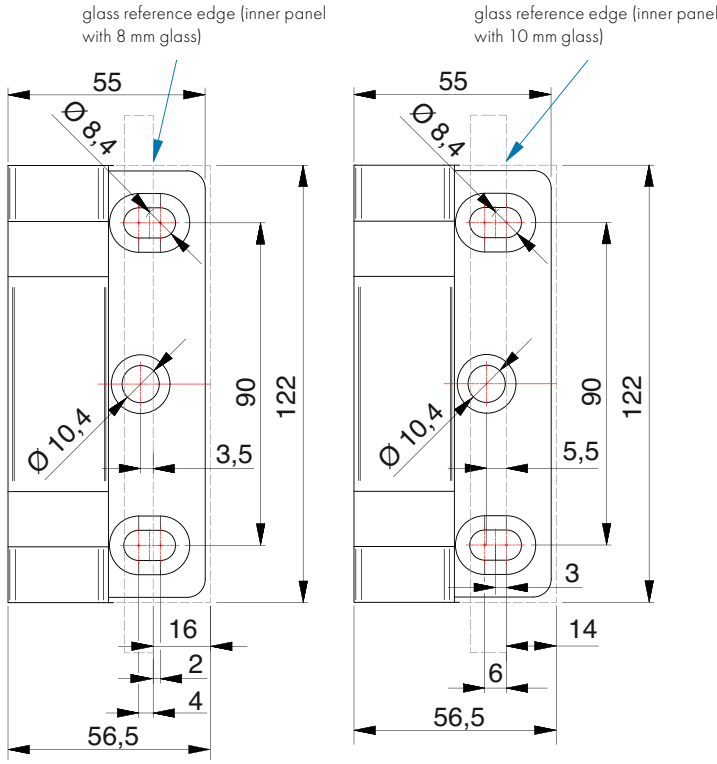

8961ZN

opening outwards/ inwards

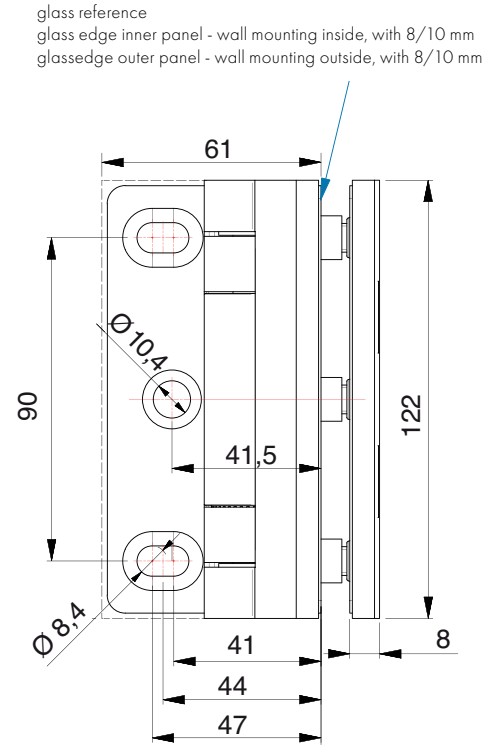

accessories - screws

chipboard screw DIN9135

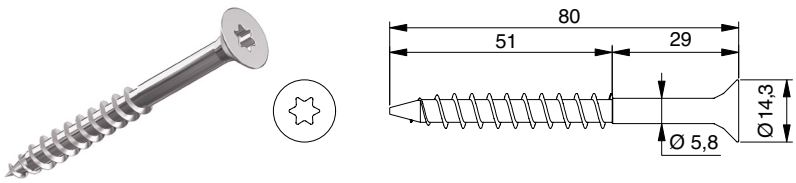

article no.	features
Z100VA	countersink head, TX40 drive 8x80 A2

article no.	features
Z101VA	countersink head, TX40 drive 8x100

NEW

for 8/10/12 mm glass



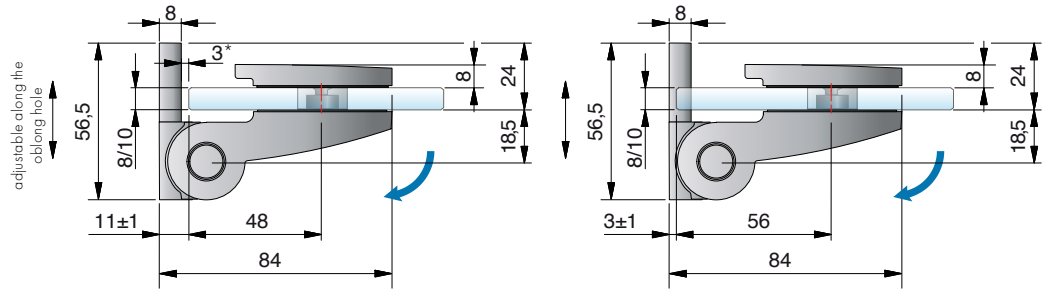

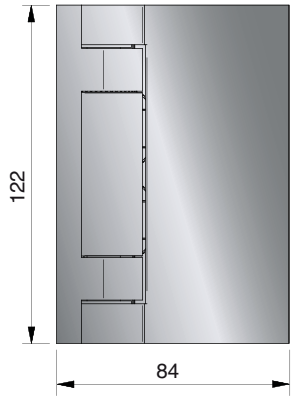

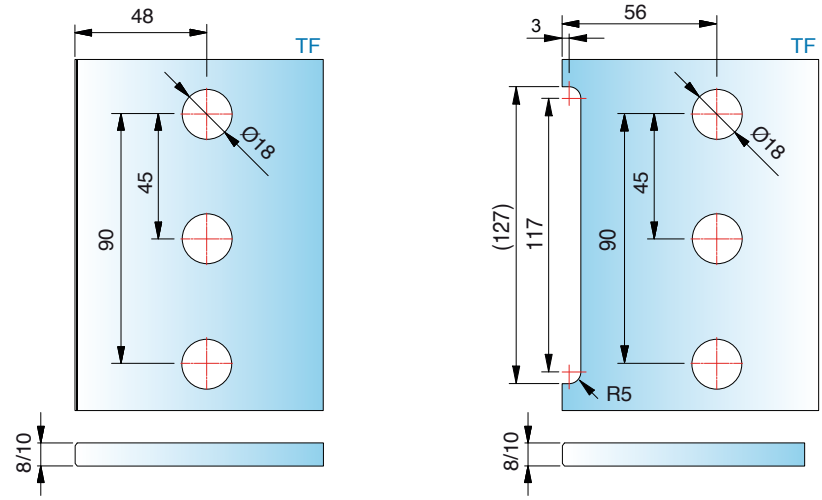

*We recommend seal 8848-KU0-8(10)-2500 with at least 3 mm spacing

article no.	finish	glass thickness	article description	features	pu/pieces
8962ZN5-SN	gloss chrome	8/10/12 mm	TURA SN heavy-duty striker door hinge for sauna, glass-wall 90°	one-sided opening outwards minimum 90°, concealed screws, wall mounting inside with oblong hole,	1/2
8962ZN1-SN	matt chrome				
8962ZNPVD22-SN	stainless steel optic				

ST = side panel I TF = door panel I W = wall

sauna heavy-duty striker door hinge – TURA SN

NEW



for 8/10/12 mm glass

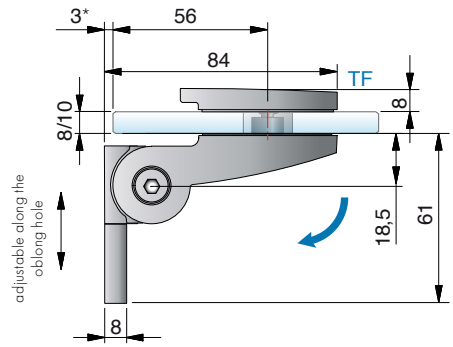

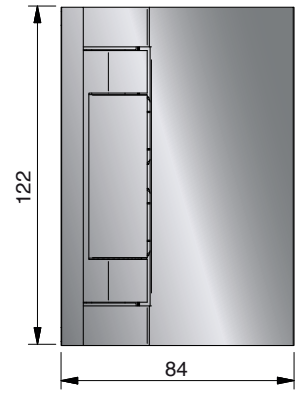

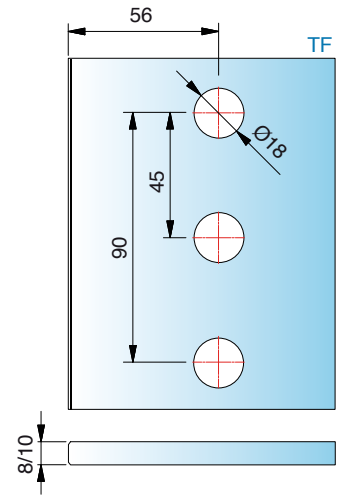

article no.	finish	glass thickness	article description	features	pu/pieces
8961ZN5-SN 8961ZN1-SN 8961ZNPVD22-SN	gloss chrome matt chrome stainless steel optic	8/10/12 mm	TURA SN heavy-duty striker door hinge for sauna, glass-wall 90°	one-sided opening outwards minimum 90°, concealed screws, wall mounting inside with oblong hole	1/2

NEW



for 8/10/12 mm glass

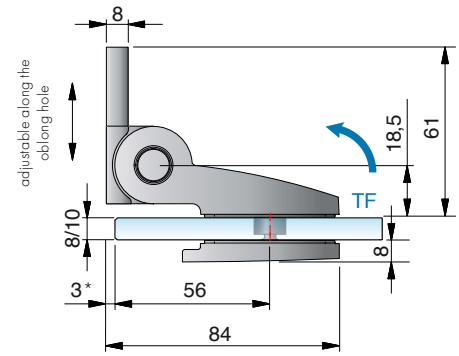

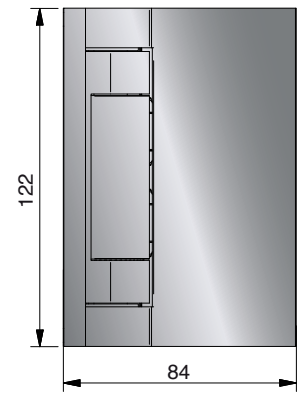

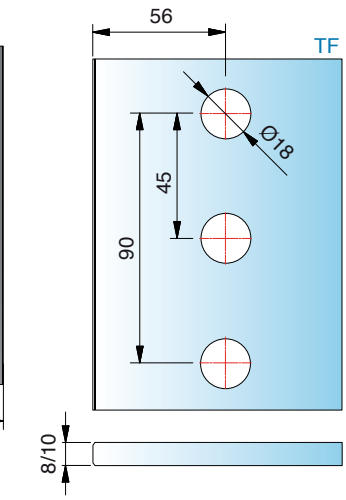

article no.	finish	glass thickness	article description	features	pu/pieces
8961ZN5-SN 8961ZN1-SN 8961ZNPVD22-SN	gloss chrome matt chrome stainless steel optic	8/10/12 mm	TURA SN heavy-duty striker door hinge for sauna, glass-wall 90°	one-sided opening inwards minimum 90°, concealed screws, wall mounting inside with oblong hole	1/2

ST = Seitenteil | TF = Türflügel | W = Wand

*We recommend seal 8848-KU0-8(10)-2500 with at least 3 mm spacing





care instructions

The sauna hardware should only be wiped clean with warm water and a soft cloth and then dried. Sharp, aggressive, alkaline or chlorine-containing cleaners, abrasives or solvents may not be used.

In the case of heavier stains (lime, grease, soap stains) we recommend our special cleaning agent "gentle care" for hardware - see page 331. The door must be held with one hand during cleaning to prevent excessive pressure on the door.

niches







corner solutions



U-shaped saunas





- many different installation situations possible
- Sauna hinges and glass must be protected from damage. Therefore, when planning the sauna situation it is necessary to take into account that the door panels must not be opened over (max. 90°). We can plan customized solutions together with you - contact us!

Please observe our installation instructions starting on page 382.

sauna heavy-duty striker door hinge – TURA SN

for 8 mm glass



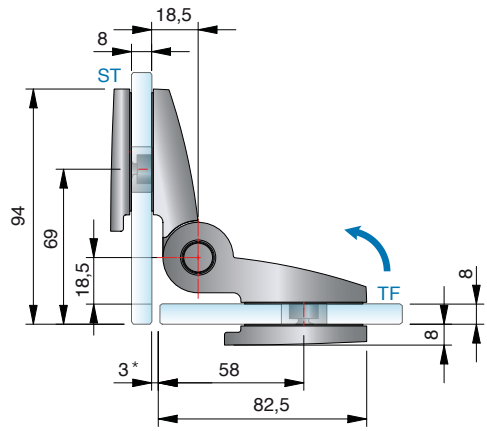

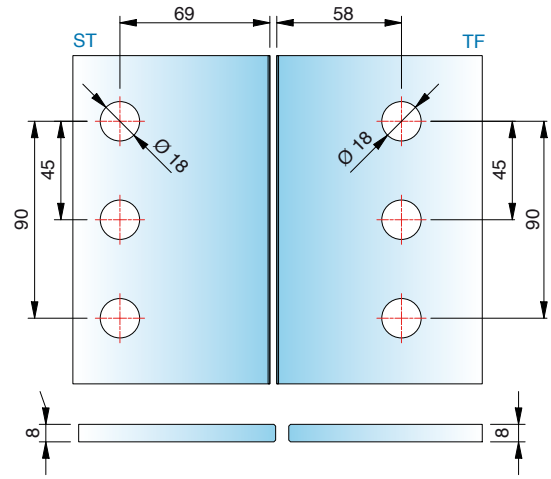

for 10 mm glass

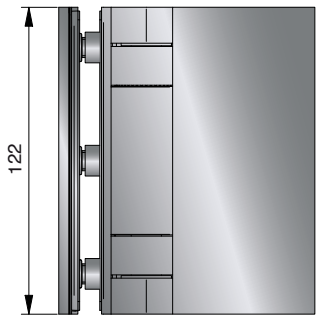

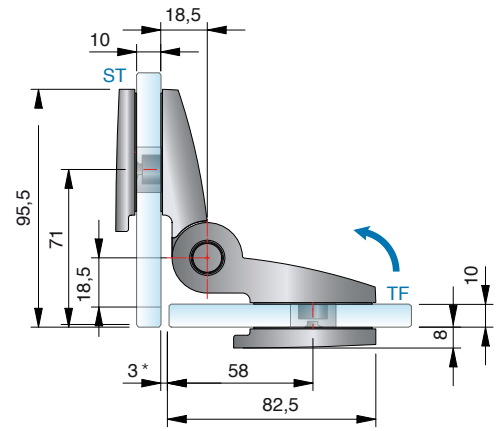

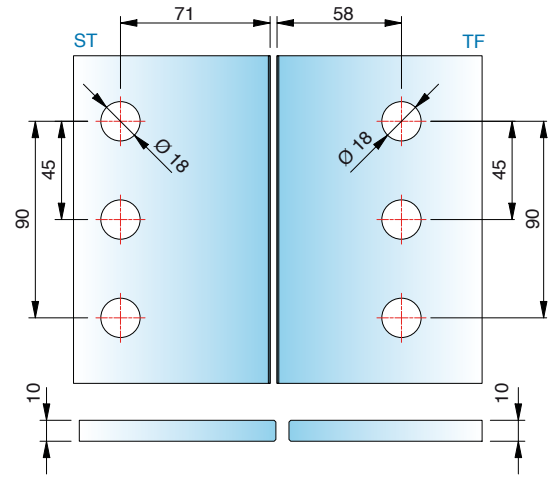

You can request the glass processing for 12 mm glass from our technical department.

article no.	finish	glass thickness	article description	features	pu/pieces
8960ZN5-SN 8960ZN1-SN 8960ZNPVD22-SN	gloss chrome matt chrome stainless steel optic	8/10/12 mm	TURA SN heavy-duty striker door hinge for sauna glass-glass 90°	one-sided opening inwards minimum 90°, concealed screws	1/2

*We recommend seal 8848-KU0-8(10)-2500 with at least 3 mm spacing

for 8/10/12 mm glass



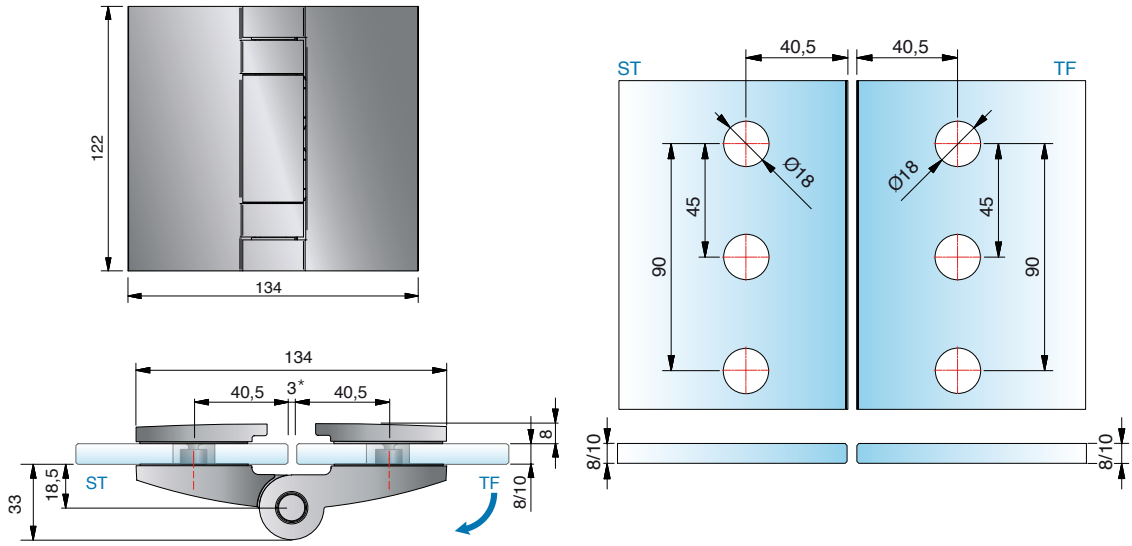

for 8/10/12 mm glass



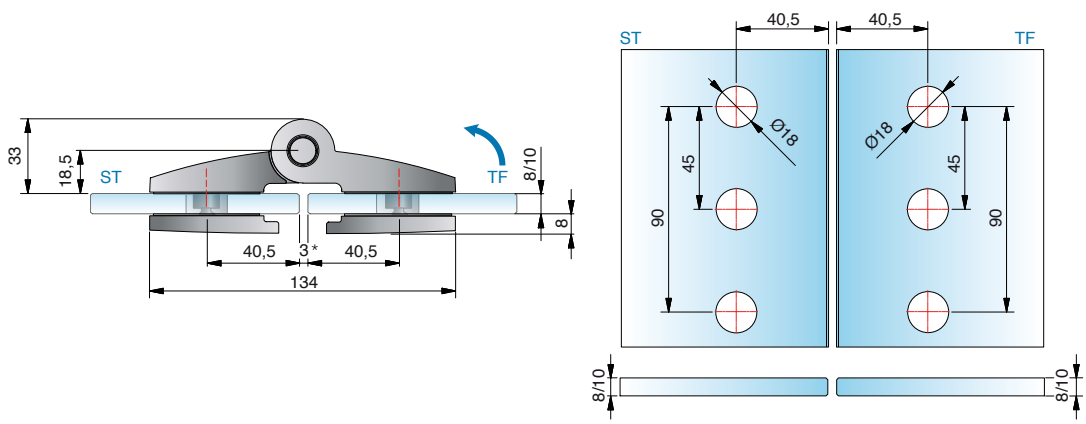

You can request the glass processing for 12 mm glass from our technical department.

article no.	finish	glass thickness	article description	features	pu/pieces
8960ZN5-SN 8960ZN1-SN 8960ZNPVD22-SN	gloss chrome matt chrome stainless steel optic	8/10/12 mm	TURA heavy-duty striker door hinge for sauna glass-glass 180°	one-sided opening inwards or outwards minimum 180°, concealed screws,	1/2

ST = Seitenteil | TF = Türflügel | W = Wand

*We recommend seal 8848-KU0-8(10)-2500 with at least 3 mm spacing

sauna angle bracket – TURA SN

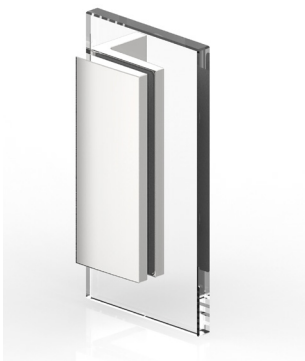

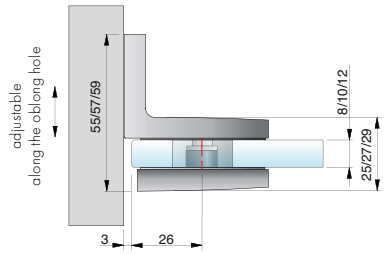

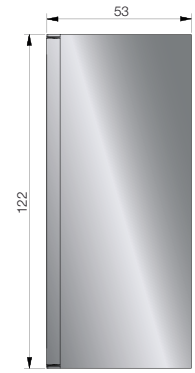

glass processing for 8/10/12 mm

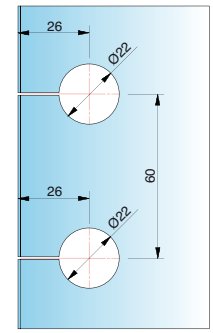

TURA SN

article no.	finish	glass thickness	article description	features	pu/pieces
8968ZN5	gloss chrome	8/10/12 mm	angle bracket TURA	concealed screws, wall mount	1/2
8968ZN1	matt chrome		glass-wall 90°	with oblong hole adjustment	
8968ZNPVD22	stainless steel optic				

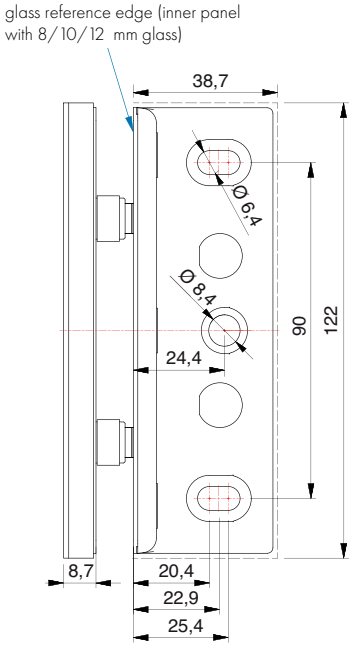





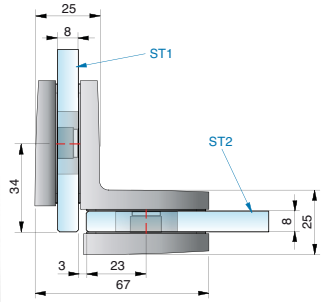

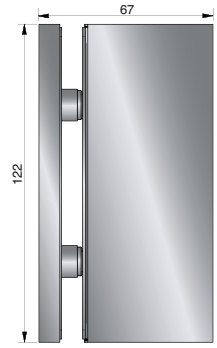

glass processing for 8 mm

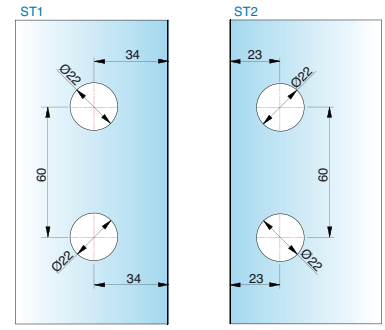

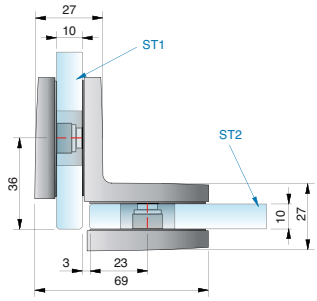

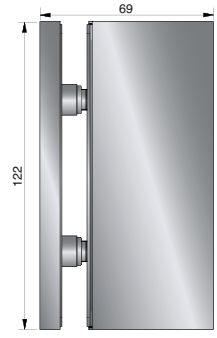

glass processing for 10 mm

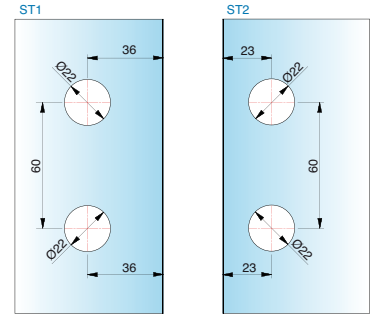

article no.	finish	glass thickness	article description	features	pu/pieces
8969ZN5	gloss chrome	8/10/12 mm	angle bracket TURA	concealed screws	1/2
8969ZN1	matt chrome		glass-glass 90°		
8969ZNPVD22	stainless steel optic				

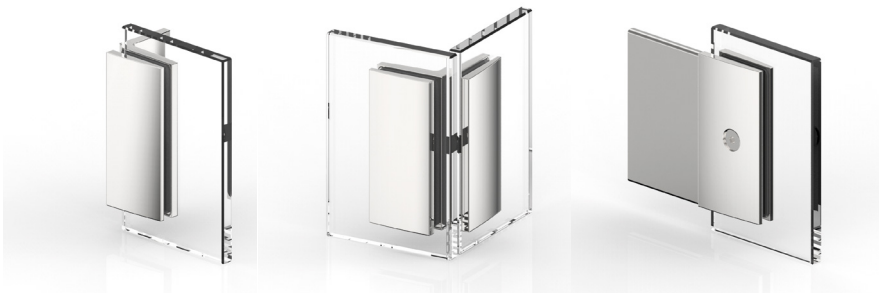

corresponding angle brackets

for FARFALLA can be found on page 222.

our service for you!

On **www.pauli.de**, you can find many different measurement sheets for all standard installations.

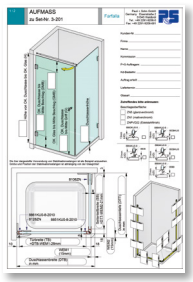

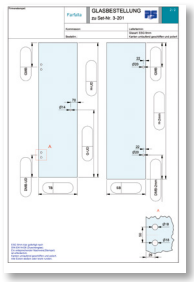

MADE IN GERMANY

DIN EN 14428

TR24 Dichtigkeit

Black EDITION



shower door hinge FARFALLA



FARFALLA - versatile and timeless

MADE IN GERMANY

This shower door hinge - which can be opened outwards or inwards one-sided - offers manifold possibilities. It is possible to create more than 50 different shower types, for example the complete folding of a glass segment for bathtub situations. The shower door seal ensures the highest degree of water retension. All wall mounts include cover plates and therefore the screws are concealed.

- concealed screws due to cover plates
- door hinge opens outwards or inwards in one direction
- assembly with full-length sealing profile possible
- the hinge axis is positioned outside of the glass door so that the glass segments can also be folded completely
- glass thickness: 6, 8 und 10 mm
- load capacity (2 hinges): 40kg corresponding to a glass door of 1000 x 2000 mm with glass thickness of 8mm
- the durability of the hardware has been tested internally according to DIN EN 14428:2015 5.5.



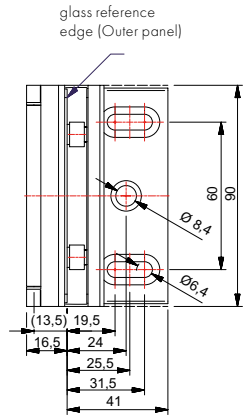

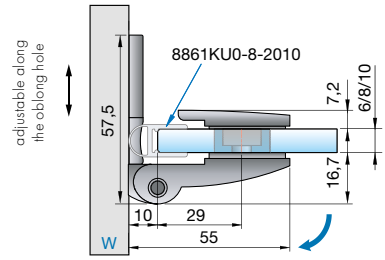

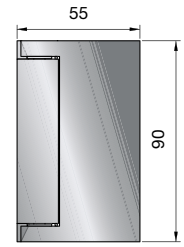

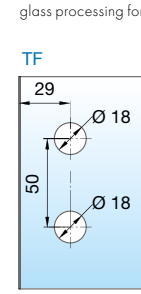

article no.	finish	glass thickness	article description	features	pu/pieces
8128ZN5	gloss chrome	6/8/10 mm	shower door hinge FARFALLA glass-wall 90°	opening outwards 90°, wall mount adjustable with the notch, comes with cover plate, full-length sealing profile concealed screws due to cover plates	1/2
8128ZN1	matt chrome				
8128ZNPVD22	stainless steel optic				
8128ZN35	RAL9005 black matt				
8128ZN135	deep black matt				



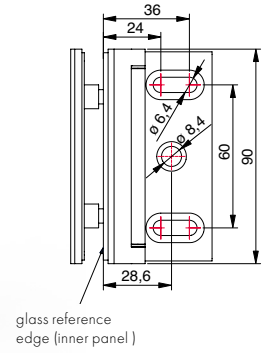

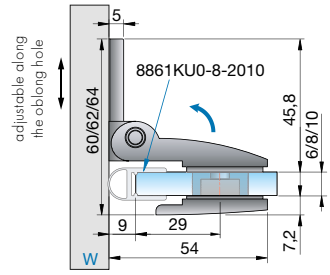

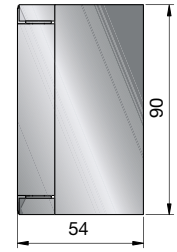

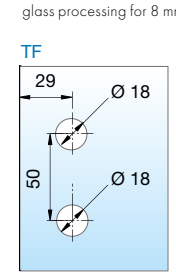

article no.	finish	glass thickness	article description	features	pu/pieces
8120ZN5	gloss chrome	6/8/10 mm	shower door hinge FARFALLA glass-wall 90°	opening outwards 90°, wall mount adjustable with the notch, comes with cover plate, full-length sealing profile concealed screws due to cover plates	1/2
8120ZN1	matt chrome				
8120ZNPVD22	stainless steel optic				
8120ZN35	RAL9005 black matt				
8128ZN135	deep black matt				

ST = side panel I TF = door panel I W = wall



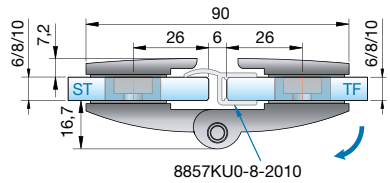

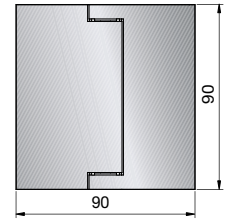

glass processing for 8 mm glass

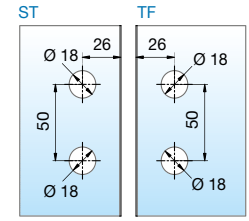

article no.	finish	glass thickness	article description	features	pu/pieces
8122ZN5	gloss chrome	6/8/10 mm	shower door hinge FARFALLA glass-glass 180°	opening outwards 180°, full-length sealing profile concealed screws due to cover plates	1/2
8122ZN1	matt chrome				
8122ZNPVD22	stainless steel optic				
8122ZN35	RAL9005 black matt*				
8122ZN135	deep black matt				



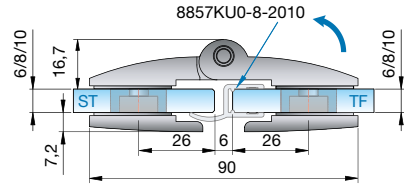

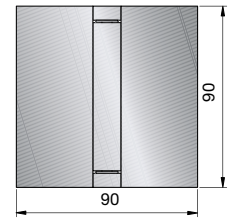

glass processing for 8 mm glass

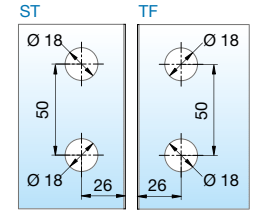

article no.	finish	glass thickness	article description	features	pu/pieces
8124ZN5	gloss chrome	6/8/10 mm	shower door hinge FARFALLA glass-glass 180°	opening outwards 180°, full-length sealing profile concealed screws due to cover plates	1/2
8124ZN1	matt chrome				
8124ZNPVD22	stainless steel optic				
8124ZN35	RAL9005 black matt*				
8124ZN135	deep black matt				

ST = side panel I TF = door panel

*article discontinued



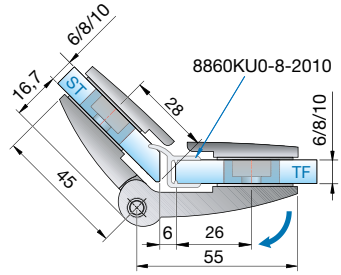

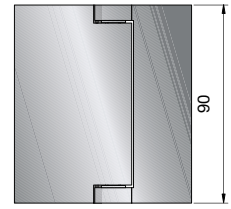

glass processing for 8 mm glass

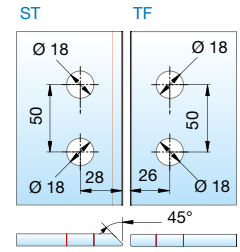

article no.	finish	glass thickness	article description	features	pu/pieces
8126ZN5	gloss chrome	6/8/10 mm	shower door hinge FARFALLA glass-glass 135°	opening outwards 200°, full-length sealing profile	1/2
8126ZN1	matt chrome				
8126ZNPVD22	stainless steel optic				
8126ZN35	RAL9005 black matt*				

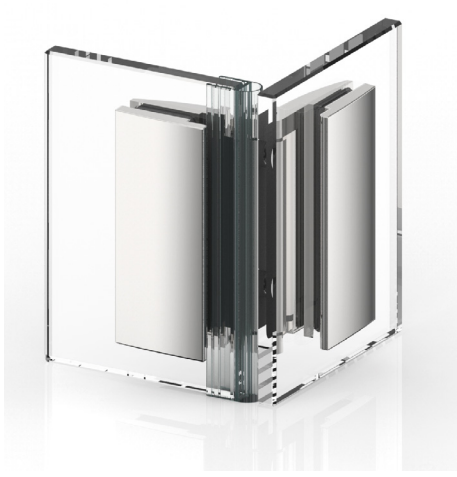

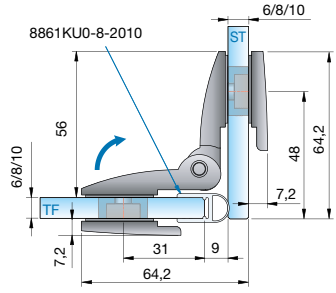

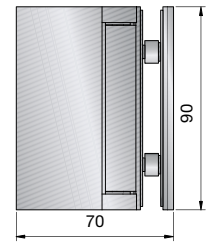

glass processing for 8 mm glass

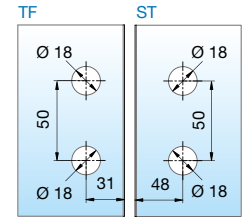

article no.	finish	glass thickness	article description	features	pu/pieces
8124ZN5	gloss chrome	6/8/10 mm	shower door hinge FARFALLA glass-glass 135°	opening inwards 90°, full-length sealing profile	1/2
8124ZN1	matt chrome				
8124ZNPVD22	stainless steel optic				
8124ZN35	RAL9005 black matt*				
8124ZN135	deep black matt				

ST = side panel I TF = door panel

* article discontinued

We recommend to install all available striker hinges with sealing profiles to avoid damage to the glass. Please note that the instruction manual can be found on page 382.

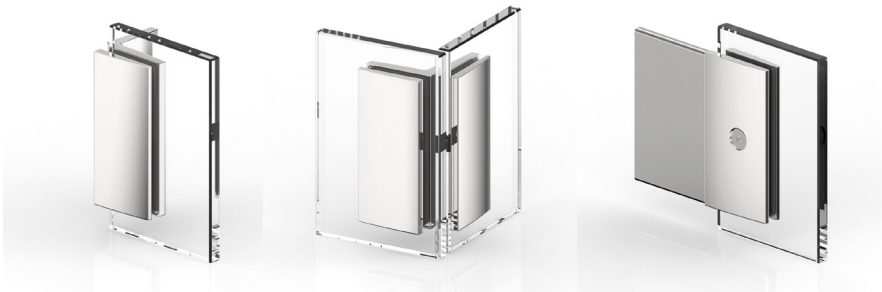

corresponding angle brackets

for PILLANGO can be found on page 222.

our service for you!

On www.pauli.de, you can find many different measurement sheets for all standard installations.

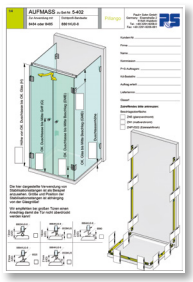

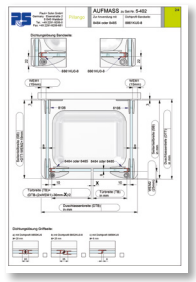

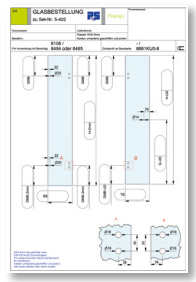

MADE
IN
GERMANY



shower door hinge PILLANGO



PILLANGO - reliable: high-performance

MADE IN GERMANY

Brilliant clarity and a multifaceted design - that is what the one sided opening shower hinge PILLANGO stands for.
Its innovative spring technology allows an individual adjustment of the clamping force and with that the closing force and the lock control of the PILLANGO shower door hinge. PILLANGO is available with a dual spring technology for light weight doors and a four spring technology for heavy weight doors.

- spring technology - choose between dual spring for light doors and quadruple springs for medium and heavy doors
- self-closing during the last 15 - 20°
- fully adjustable closed position
- full-length sealing profile within the area of the hinge
- simple glass handling as only holes are necessary
- glass thickness: 6, 8 and 10 mm
- loading capacity (2 hinges): 40 kg
  corresponds to a maximum glass door size of 1000 x 2000 mm with a glass thickness of 8 mm
- the durability of the hardware has been tested internally according to DIN EN 14428:2015 5.5.



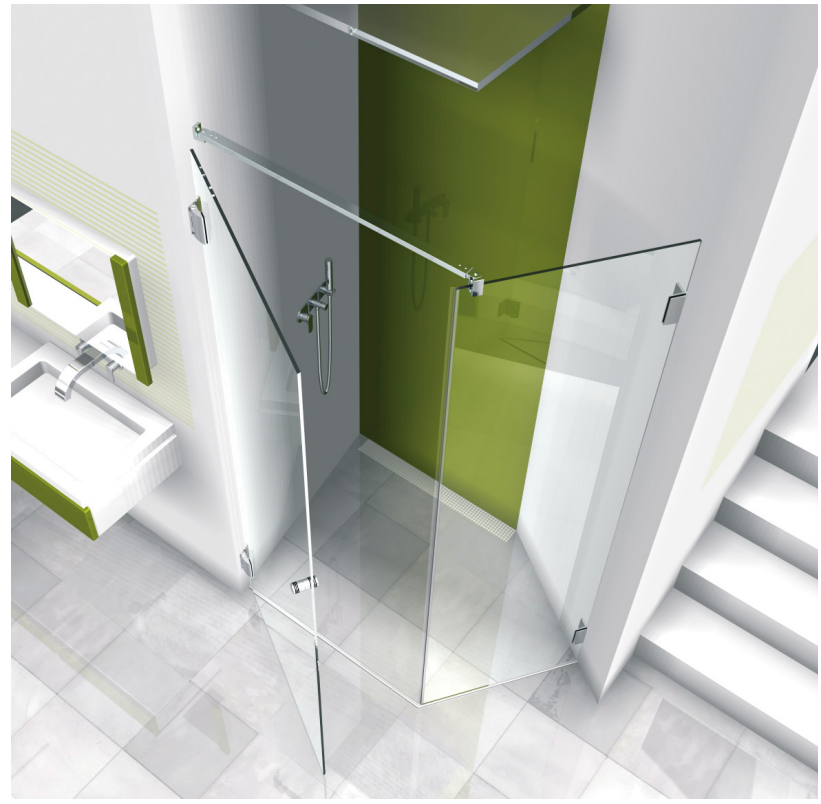

- closed position fully adjustable

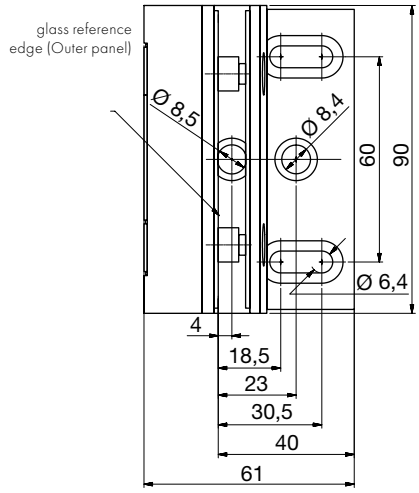

- wall mount 8480/8481



- allen wrench (8479ST8) is mandatory for mounting and adjusting the closed position. This can be found on page 377.

shower door hinge - PILLANGO

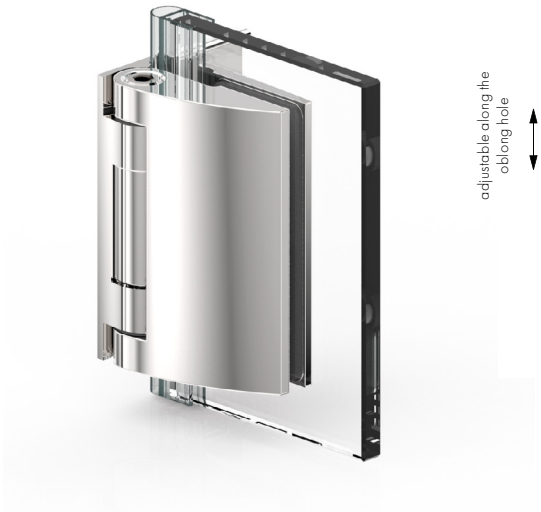

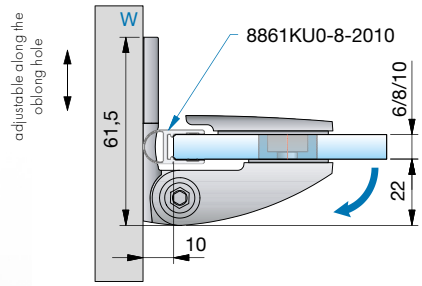

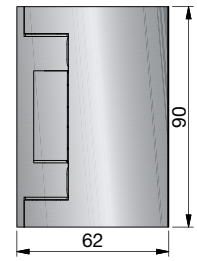

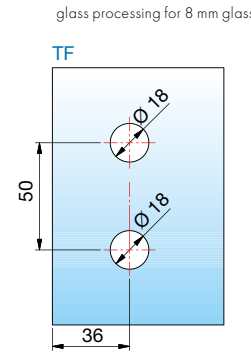

article no.	finish	glass thickn.	article description	multi-spring-technology	features	pu/pieces
8481ZN5 8481ZN1 8481ZNPVD22	gloss chrome matt chrome stainless steel optic	6/8/10 mm	shower door hinge PILLANGO glass-wall 90°	2 springs	opening outwards 90°, wall mount adjustable along the oblong hole, comes with cover plate, with adjustable closed position	1/2
8480ZN5 8480ZN1 8480ZNPVD22	gloss chrome matt chrome stainless steel optic			4 springs	dimensions of mounting bracket see page 211	



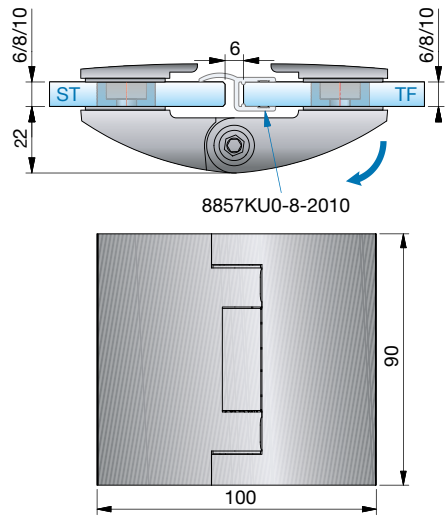

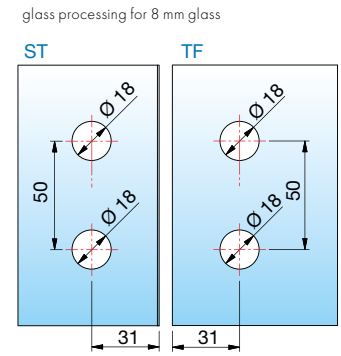

article no.	finish	glass thickn.	article description	multi-spring-technology	features	pu/pieces
8483ZN5 8483ZN1 8483ZNPVD22	gloss chrome matt chrome stainless steel optic	6/8/10 mm	shower door hinge PILLANGO glass-glass 180°	2 springs	opening outwards 90°, with adjustable closed position	1/2
8482ZN5 8482ZN1 8482ZNPVD22	gloss chrome matt chrome stainless steel optic			4 springs		

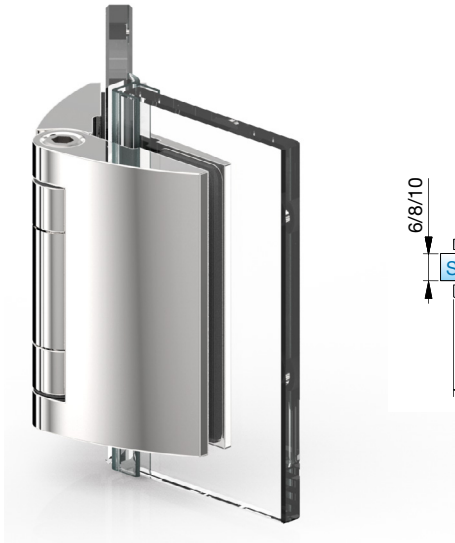

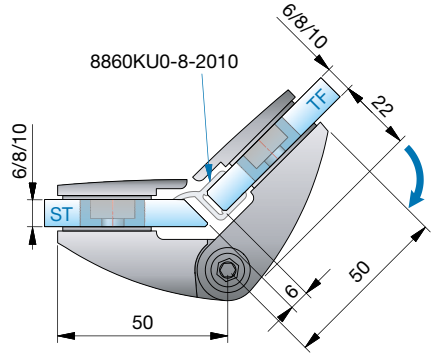

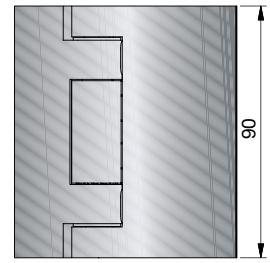

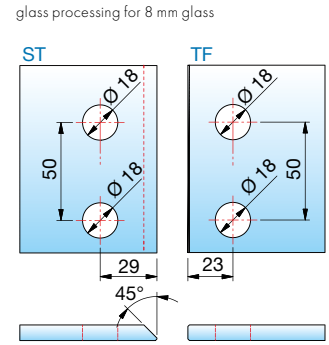

article no.	finish	glass thickn.	article description	multi-spring-technology	features	pu/pieces
8487ZN5	gloss chrome	6/8/10 mm	shower door hinge PILLANGO glass-glass 135°	2 springs	opening outwards 135°, with adjustable closed position	1/2
8487ZN1	matt chrome					
8487ZNPVD22	stainless steel optic					
8486ZN5	gloss chrome			4 springs		
8486ZN1	matt chrome					
8486ZNPVD22	stainless steel optic					

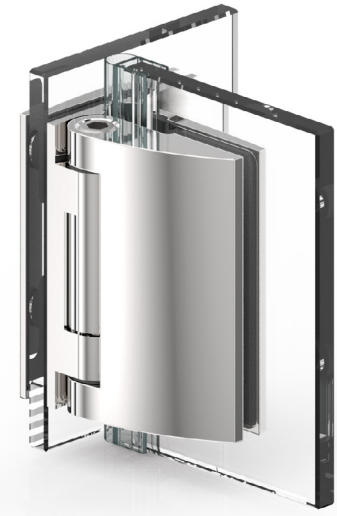

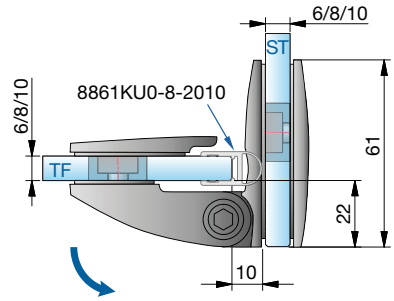

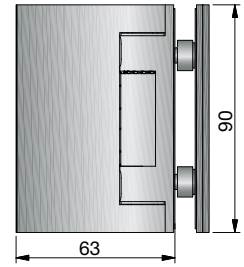

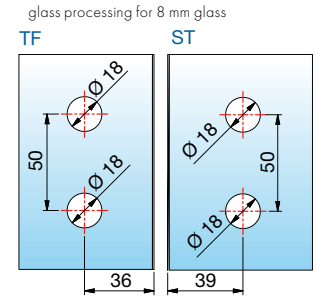

article no.	finish	glass thickn.	article description	multi-spring-technology	features	pu/pieces
8485ZN5	gloss chrome	6/8/10 mm	shower door hinge PILLANGO glass-glass 90°	2 springs	opening outwards 90°, with adjustable closed position	1/2
8485ZN1	matt chrome					
8485ZNPVD22	stainless steel optic					
8484ZN5	gloss chrome			4 springs		
8484ZN1	matt chrome					
8484ZNPVD22	stainless steel optic					

ST = side panel I TF = door panel I W = wall

*article no. end: ZN5 gloss chrome; ZN1 matt chrome; ZNPVD22 stainless steel optic

approved glass weights for doors with PILLANGO

The spring technology of the shower door hinge PILLANGO allows you to choose the right hinge for your application. You can find the recommendation of Pauli + Sohn concerning optimal closing force of the hinges related to the door size in the following chart. Please always advise when ordering.

door heigth			door width											
			450 mm	500 mm	550 mm	600 mm	650 mm	700 mm	750 mm	800 mm	850 mm	900 mm	950 mm	1000 mm
	6 mm	1600 mm	10,8 kg	12,0 kg	13,2 kg	14,4 kg	15,6 kg	16,8 kg	18,0 kg	19,2 kg	20,4 kg	21,6 kg	22,8 kg	24,0 kg
		1700 mm	11,5 kg	12,8 kg	14,0 kg	15,3 kg	16,6 kg	17,9 kg	19,1 kg	20,4 kg	21,7 kg	23,0 kg	24,2 kg	25,5 kg
		1800 mm	12,2 kg	13,5 kg	14,9 kg	16,2 kg	17,6 kg	18,9 kg	20,3 kg	21,6 kg	23,0 kg	24,3 kg	25,7 kg	27,0 kg
		1900 mm	12,8 kg	14,3 kg	15,7 kg	17,1 kg	18,5 kg	20,0 kg	21,4 kg	22,8 kg	24,2 kg	25,7 kg	27,1 kg	28,5 kg
		2000 mm	13,5 kg	15,0 kg	16,5 kg	18,0 kg	19,5 kg	21,0 kg	22,5 kg	24,0 kg	25,5 kg	27,0 kg	28,5 kg	30,0 kg
		2100 mm	14,2 kg	15,8 kg	17,3 kg	18,9 kg	20,5 kg	22,1 kg	23,6 kg	25,2 kg	26,8 kg	28,4 kg	29,9 kg	31,5 kg
	8 mm	1600 mm	14,4 kg	16,0 kg	17,6 kg	19,2 kg	20,8 kg	22,4 kg	24,0 kg	25,6 kg	27,2 kg	28,8 kg	30,4 kg	32,0 kg
		1700 mm	15,3 kg	17,0 kg	18,7 kg	20,4 kg	22,1 kg	23,8 kg	25,5 kg	27,2 kg	28,9 kg	30,6 kg	32,3 kg	34,0 kg
		1800 mm	16,2 kg	18,0 kg	19,8 kg	21,6 kg	23,4 kg	25,2 kg	27,0 kg	28,8 kg	30,6 kg	32,4 kg	34,2 kg	36,0 kg
		1900 mm	17,1 kg	19,0 kg	20,9 kg	22,8 kg	24,7 kg	26,6 kg	28,5 kg	30,4 kg	32,3 kg	34,2 kg	36,1 kg	38,0 kg
		2000 mm	18,0 kg	20,0 kg	22,0 kg	24,0 kg	26,0 kg	28,0 kg	30,0 kg	32,0 kg	34,0 kg	36,0 kg	38,0 kg	40,0 kg
		2100 mm	18,9 kg	21,0 kg	23,1 kg	25,2 kg	27,3 kg	29,4 kg	31,5 kg	33,6 kg	35,7 kg	37,8 kg	39,9 kg	42,0 kg
	10 mm	1600 mm	18,0 kg	20,0 kg	22,0 kg	24,0 kg	26,0 kg	28,0 kg	30,0 kg	32,0 kg	34,0 kg	36,0 kg	38,0 kg	40,0 kg
		1700 mm	19,1 kg	21,3 kg	23,4 kg	25,5 kg	27,6 kg	29,8 kg	31,9 kg	34,0 kg	36,1 kg	38,3 kg	40,4 kg	42,5 kg
		1800 mm	20,3 kg	22,5 kg	24,8 kg	27,0 kg	29,3 kg	31,5 kg	33,8 kg	36,0 kg	38,3 kg	40,5 kg	42,8 kg	45,0 kg
		1900 mm	21,4 kg	23,8 kg	26,1 kg	28,5 kg	30,9 kg	33,3 kg	35,6 kg	38,0 kg	40,4 kg	42,8 kg	45,1 kg	47,5 kg
		2000 mm	22,5 kg	25,0 kg	27,5 kg	30,0 kg	32,5 kg	35,0 kg	37,5 kg	40,0 kg	42,5 kg	45,0 kg	47,5 kg	50,0 kg
		2100 mm	23,6 kg	26,3 kg	28,9 kg	31,5 kg	34,1 kg	36,8 kg	39,4 kg	42,0 kg	44,6 kg	47,3 kg	49,9 kg	52,5 kg

hinges with 2 springs for lightweight doors (8481ZN / 8483ZN / 8485ZN / 8487ZN)

hinges with 4 springs for mediumweight and heavyweight doors (8480ZN / 8482ZN / 8484ZN / 8486ZN)

door is too heavy







- the multi-spring-technology ensures the constant distribution of force and offers stability and long durability.
- depending on the size of the door panels, the shower door hinges can be equipped with 2- or 4-spring technology - please refer to the statistical chart on the right hand side.

general note

- system-related, micro-scratches in the area of the rollers on the visible surface can lead to a superficial matting

We recommend to install all available striker hinges with sealing profiles to avoid damage to the glass. Please note that the instruction manual can be found on page 382.



corresponding angle brackets

for PAPILLON can be found on page 222.

our service for you!

On www.pauli.de, you can find many different measurement sheets for all standard installations.

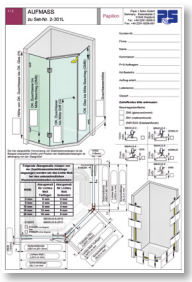

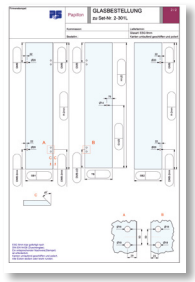

MADE
IN
GERMANY



shower door hinge PAPILLON



PAPILLON – simple: attractive

MADE IN GERMANY

Often it is the simple perfection which makes a design especially attractive. like PAPILLON. The unobtrusive design adapts perfectly to different bathroom styles, meanwhile the innovative magnet technology closes the shower doors reliably.

- concealed screws due to cover plates
- shower door hinge one-sided opening outwards
- PAPILLON with magnets is particularly suitable for applications, where shower door and bathroom door touch each other
- assembly with a continuous seal possible
- with a self-closing mechanism without the common spring mechanism (also available without magnetic closing)
- glass thickness: 6, 8 und 10 mm
- loading capacity (2 hinges) 40 kg
  corresponds to a glass door with the dimension of 1000 x 2000 mm and a glass thickness of 8mm
- the durability of the hardware has been tested internally according to DIN EN 14428:2015 5.5.





- PAPILLON with magnet is particularly suitable for applications, where shower door and bathroom door touch each other.



- with a self-closing mechanism without the common spring mechanism and therefore without mechanical friction



- PAPILLON hinge without magnetic closure possible - magnet is replaced by a blind plug

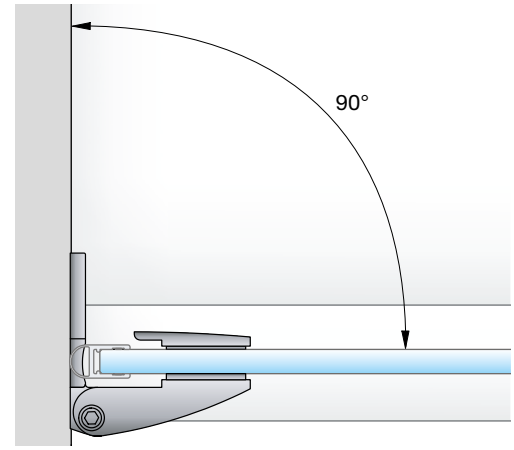

- the installation angle should not be smaller than 90° when using 8100ZN.

We recommend to install all available striker hinges with sealing profiles to avoid damage to the glass. Please note that the instruction manual can be found on page 382.

shower door hinge - PAPILLON



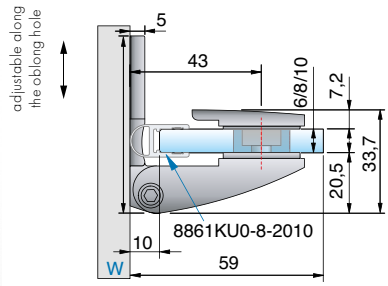

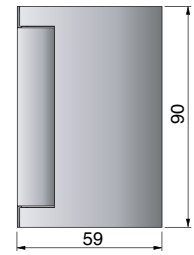

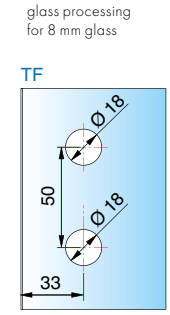

PAPILLON

article no.	finish	glass thickn.	article description	multi-spring-technology	features	pu/pieces
8100ZN5 8100ZN1 8100ZNPVD22	gloss chrome matt chrome stainless steel optic	6/8/10 mm	shower door hinge PAPILLON glass-wall 90°	self-closing magnet mechanism	opening outwards 90°, full-length sealing profile, adjustable along the hole and comes with cover plate, concealed screws due to cover plates	1/2
8101ZN5 8101ZN1 8101ZNPVD22	gloss chrome matt chrome stainless steel optic			without self-closing magnet mechanism		

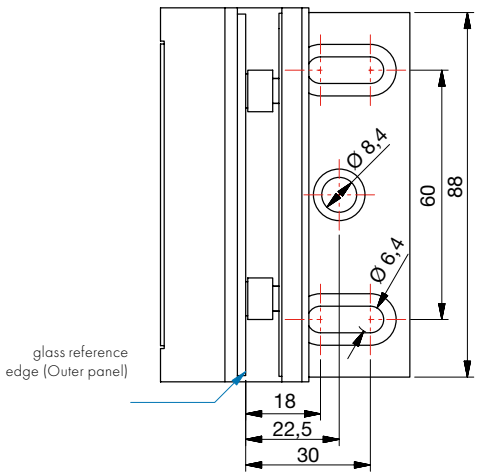

- wall mount 8100ZN/8101ZN

ST = side panel I TF = door panel I W = wall



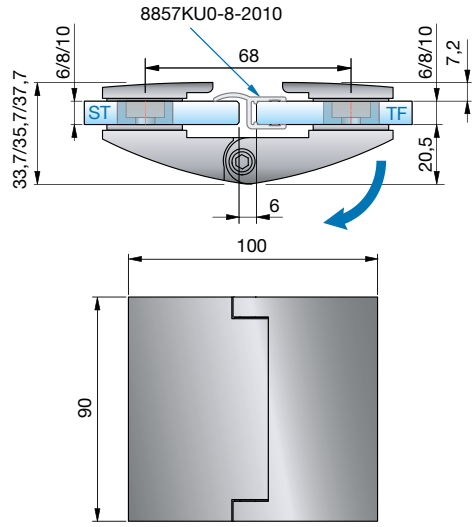

glass processing for 8 mm glass

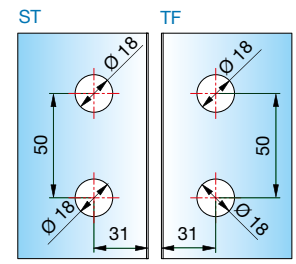

article no.	finish	glass thickn.	article description	multi-spring-technology	features	pu/pieces
8102ZN5 8102ZN1 8102ZNPVD22	gloss chrome matt chrome stainless steel optic	6/8/10 mm	shower door hinge PAPILLON glass-glass 180°	self-closing magnet mechanism	opens outwards 90°, full-length sealing profile, concealed screws due to cover plates	1/2
8103ZN5 8103ZN1 8103ZNPVD22	gloss chrome matt chrome stainless steel optic			without self-closing magnet mechanism		



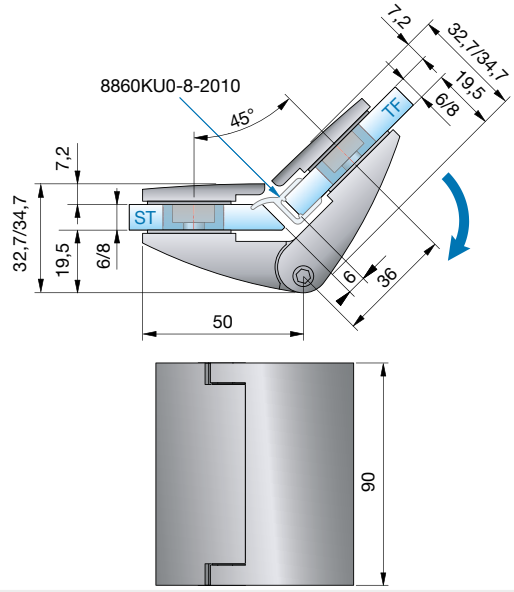

glass processing for 8 mm glass

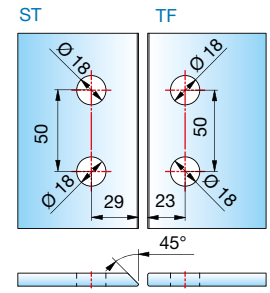

article no.	finish	glass thickn.	article description	multi-spring-technology	features	pu/pieces
8104ZN5 8104ZN1 8104ZNPVD22	gloss chrome matt chrome stainless steel optic	6/8/10 mm	shower door hinge PAPILLON glass-glass 135°	self-closing magnet mechanism	opens outwards 90°, full-length sealing profile, concealed screws due to cover plates	1/2
8105ZN5 8105ZN1 8105ZNPVD22	gloss chrome matt chrome stainless steel optic			without self-closing magnet mechanism		

angle bracket for PILLANGO, PAPILLON, FARFALLA



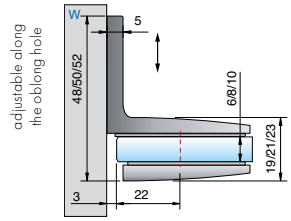

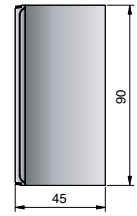

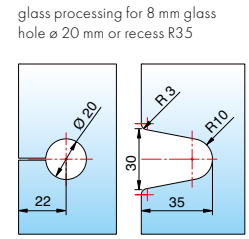

article no.	finish	glass thickness	article description	features	pu/pieces
8107ZN5	gloss chrome	6/8/10 mm	angle bracket,	wall mount adjustable along the oblong hole	1/2
8107ZN1	matt chrome		glass-wall, 90°	and comes with cover plate	
8107ZNPVD22	stainless steel optic			concealed screws due to cover plates	
8107ZN35*	RAL9005 black matt				
8107ZN135	deep black matt				



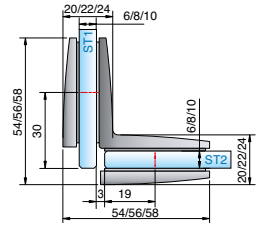

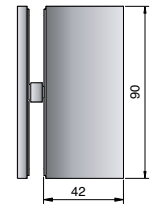

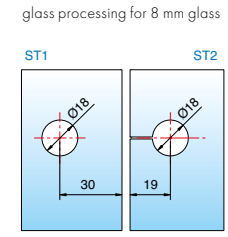

article no.	finish	glass thickness	article description	features	pu/pieces
8109ZN5	gloss chrome	6/8/10 mm	angle bracket,	concealed screws due to cover plates	1/2
8109ZN1	matt chrome		glass-glass, 90°		
8109ZNPVD22	stainless steel optic				
8109ZN35*	RAL9005 black matt				
8109ZN135	deep black matt				



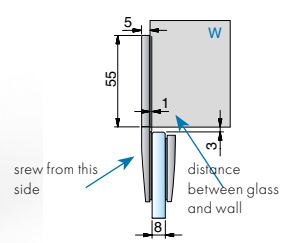

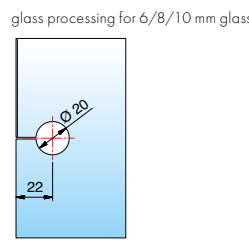

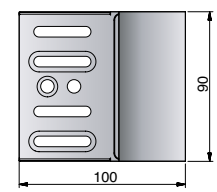

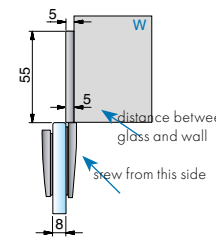

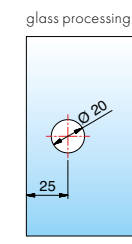

article no.	finish	glass thickness	article description	features	pu/pieces
8110ZN5	gloss chrome	6/8/10 mm	connector	wall mount adjustable along the oblong hole, and comes with	1/2
8110ZN1	matt chrome		glass-wall 180°	cover plate, screw side usable left or right	
8110ZNPVD22	stainless steel optic				

*article has been discontinued

wall mount 8107ZN

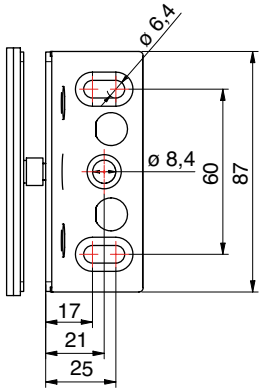



ST = side panel | TF = door panel | W = wall

connection option for side panel



silicon

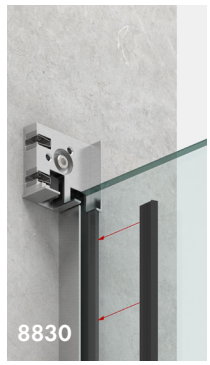



U-profile page 294



angle bracket **FLAMEA⁺**, fixed page 84



angle bracket **FLAMEA⁺** , adjustable, page 86



angle bracket **NIVELLO⁺** page 150



angle bracket, **FLAMEA** page 170



angle bracket, **FLAMEA**, fixed, page 168



angle bracket, **FLAMEA**, adjustable, page 171

our service for you!

glass calculation

Use our new planning tool at www.pauli.de/en to calculate glass sizes.

Need more help? We can support you in every phase of your project. Just give us a call: 02291 9206-0

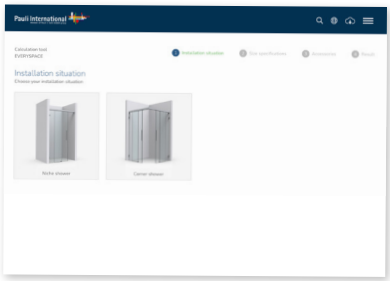

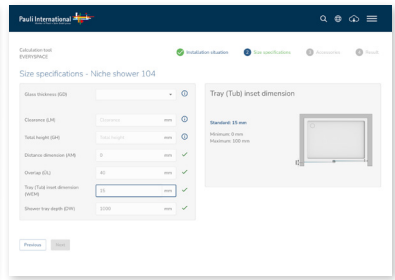

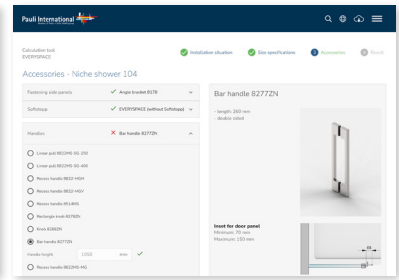

MADE IN GERMANY



sliding door system – EVERYSPACE

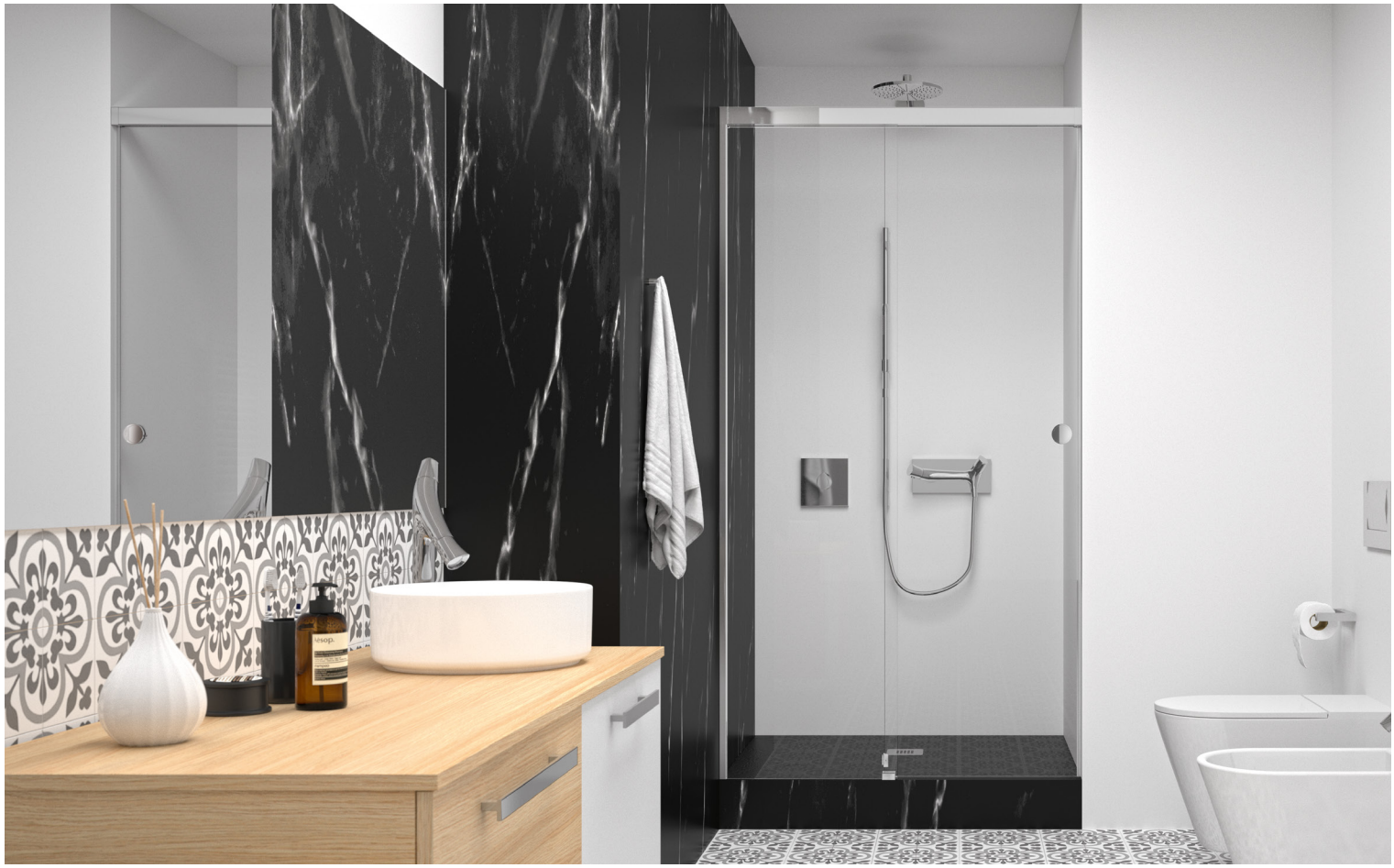

EVERYSPACE – shower more beautifully

MADE IN GERMANY

With EVERYSPACE and EVERYSPACE COMFORT, we have taken the sliding door hardware for the modern bathroom even further. Our focus was on design, ease of installation and reliability.
The system is flexible and versatile - simply ideal for creating lasting value in the commercial and private sectors.

- finish:
  E3/50 – gloss chrome
  E6EV5 – gloss anodized
  E6C35 – black matt
- guide rail can be secured to the side panel without attachment to the wall
- one- or two-sided damping unit (incl. retractable function)
- carriage mounting without glass drilling
- easy height adjustment (± 3 mm)
- with glass thickness control (patent pending)
- door panel easy to install
- floor guide can be separated for easy installation and cleaning
- depending on the position of the shower head, the overlapping glass elements (40 mm) no sealing profile is necessary
- adhesive handles with optimized adhesive force, therefore no glass processing is necessary (other handles are available on request)
- optimized space-saving solutions for small bathrooms

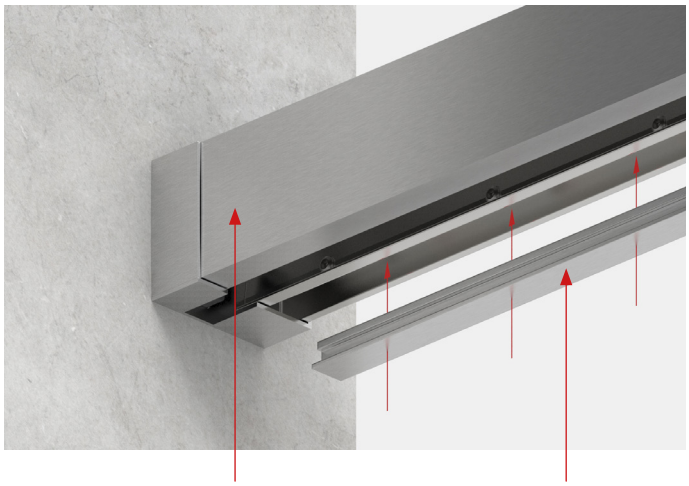

front cover panel for guide rail

filler profile in the upper frame

The system is closed at the bottom with a filler profile. This makes it look very elegant and gives protection from debris and water.

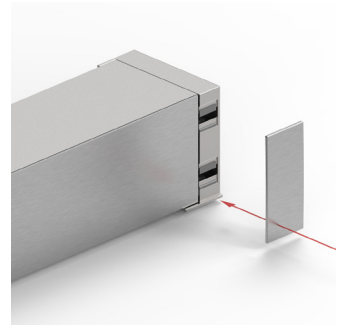

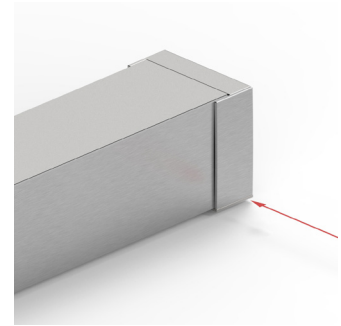

By an overlapping small cap at the ends and corner connectors, any cutting surfaces of the guide rail are elegantly concealed.

floor guide for **easy cleaning**

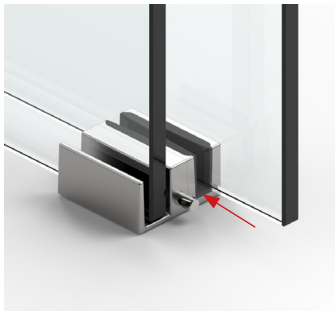

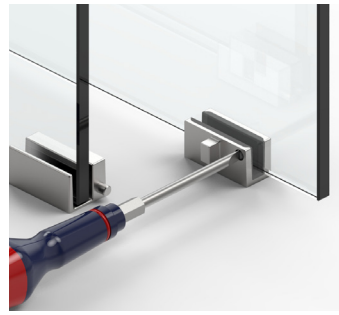

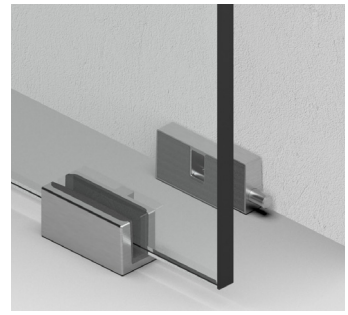

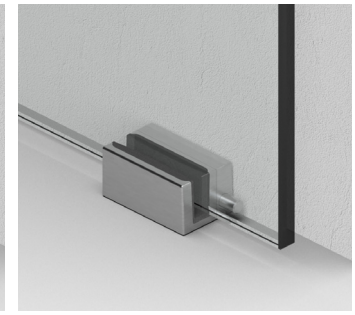

floor guide with release for easier mounting and cleaning, enormous noise reduction due to almost play-free adjustment possibility of the glass thicknesses

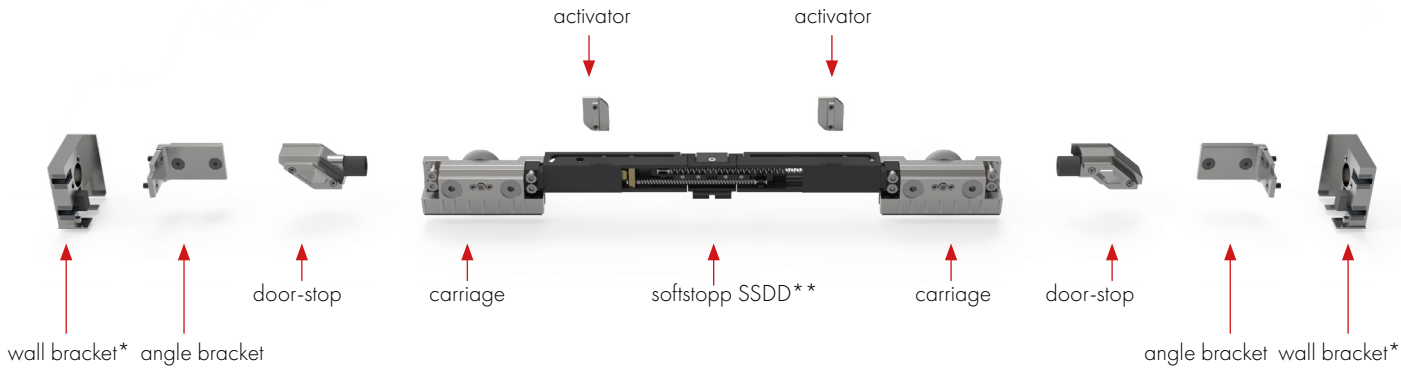

*with integrated buffer function

***powder coated for a better mechanics

connection options **guide rail**

MADE IN GERMANY



guide rail is clamped onto
the side panel



guide rail mounted to
the wall

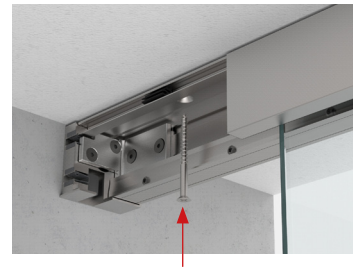

guide rail mounted to **the ceiling**
(factory drilled every 180 mm)

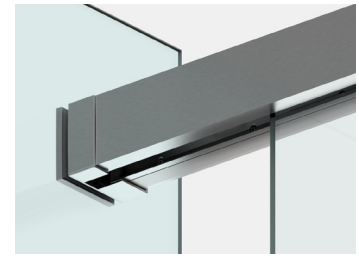

guide rail attached to
the side panel



- guide rail made of high-strength aluminum alloy
- corner connector made of solid high quality zinc die casting
- uniform design of the finish with continuous high gloss chrome plating

function of the **softstopp**

- Activator is fixed in the guide rail and takes the springs with it when opening and closing.

Assembly note:
When hanging the door panels, all springs must be loaded.

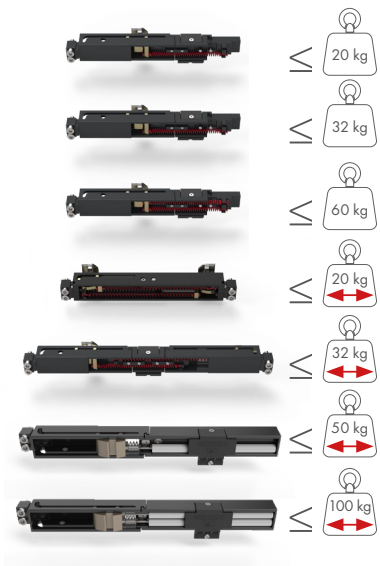

	door width	softstopp variant
8822RAL7016-SSD-20	single sided, stopped from 435 - 1000* mm double sided, stopped from 620 - 1000* mm	softstopp single-sided for small doors
8822RAL7016-SSD-32	single sided, stopped from 435 - 1000* mm double sided, stopped from 620 - 1000* mm	softstopp single-sided for medium doors
8822RAL7016-SSD-60	single sided, stopped from 435 - 1000* mm double sided, stopped from 620 - 1000* mm	softstopp single-sided for large doors
8822RAL7016-SSDD20	380** - 505 mm	double-sided softstopp for small doors
8822RAL7016-SSDD	505 - 620 mm	double-sided softstopp for medium doors
8822RAL7016-SSD50	from 725 mm	softstopp single-sided for large doors
8822RAL7016-SSD100	from 915 mm (in combination with heavy duty carriage)	softstopp single-sided for large doors

*May vary depending on application
**ONLY NICHE SOLUTIONS, corner applications only possible with supports. Please contact our technical department!

activator is in the resting position

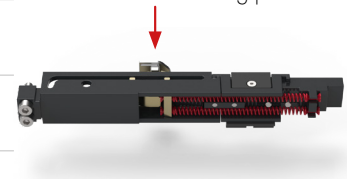

activator loads the spring, is unhooked and the spring remains loaded.



operation of the **glass thickness regulator**

MADE IN GERMANY

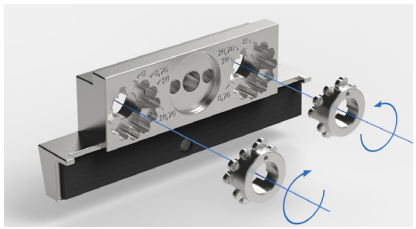

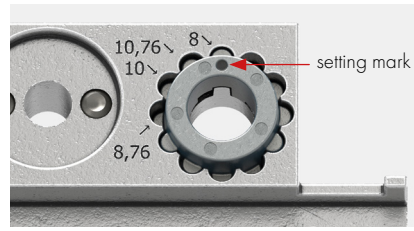

With the patent-pending adjustment option, the glass thickness can be easily regulated. (two adjustment crowns per carriage). There is no need to replace inserts or screws.

- glass thicknesses Mono ESG: 8 and 10 mm
- glass thicknesses LSG made of FTG: 8.76 and 10.76 mm

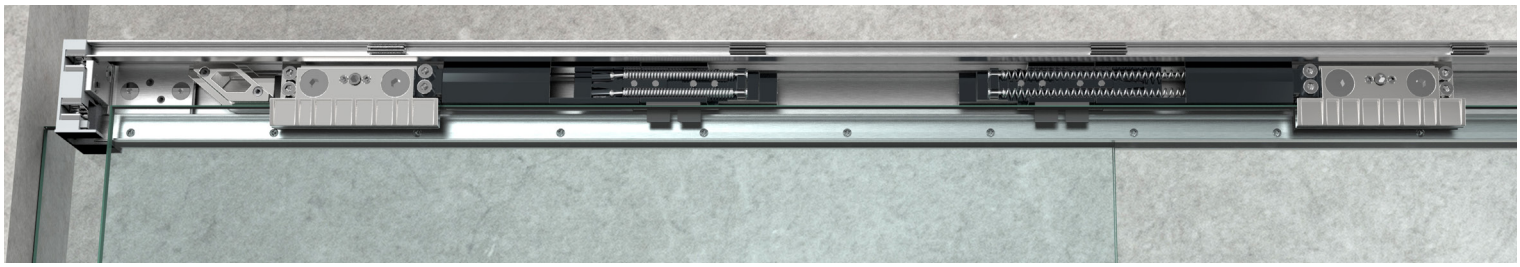

- hardware and attachments made of solid, high-quality zinc die-cast
- rollers made of robust fiberglass-reinforced polyamide

height adjustment

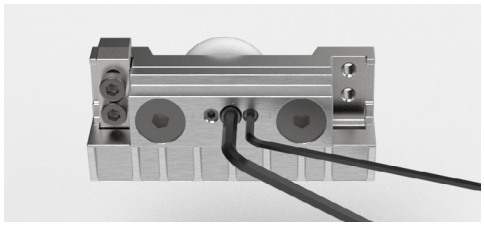

zero setting

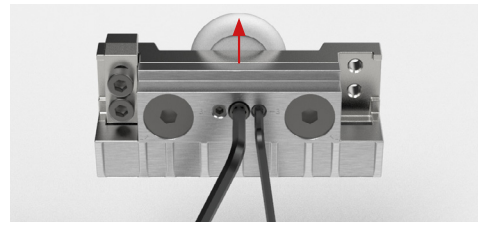

- The height adjustment of the door panel is done by means of an excenter in the carriage and can be adjusted by +/–3 mm. Before hanging the door, this must be set to zero..

anti-lift device

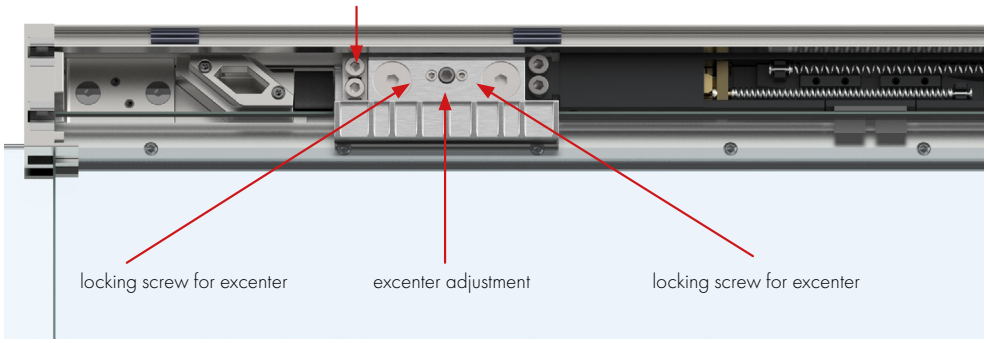

type overview **niche shower**

MADE IN GERMANY

type 104 (L/R)	type 105 (L/R)	type 106
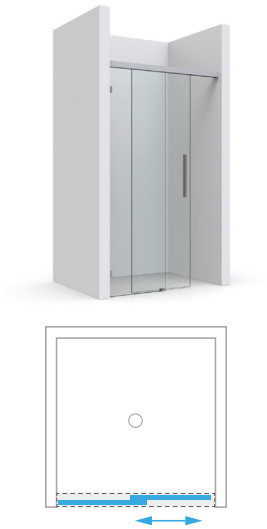		



article no. **8823**

niche shower – wall mounting



All types also possible with ceiling mounted (article no. 8824)

type-overview **corner showers**



type 209
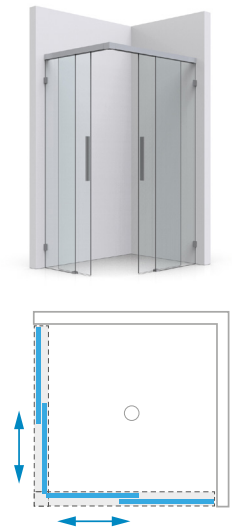



article no. **8825**

corner shower – guide rail all sided

MADE IN GERMANY

type overview **corner shower**

type 204 (L/R)	type 213
	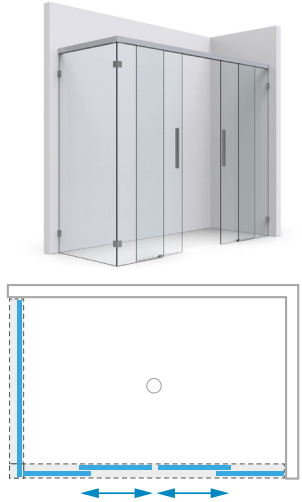
	



article no. **8825**

corner shower – guide rail all sided



article no. **8827**

corner shower – guide rail mounted to the glass panel



All types also possible with ceiling mounted (article no. 8826) .

type overview **U shower**

type 403 (L/R)



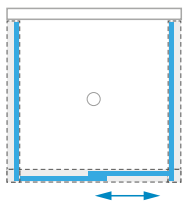



article no. **8828**

U shower – guide rail all sided



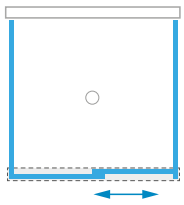



article no. **8831**

U shower – guide rail mounted to the glass



All types also possible with ceiling mounted (article no. 8829) .

type 406



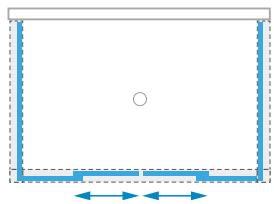

type overview **bathtub solution**

MADE IN GERMANY

type 601 (L/R)



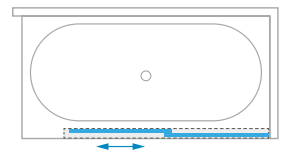



article no. **8832**

bathtub solution –
guide rail all sided



All types also possible with ceiling mounted (article no. 8833).

MADE IN GERMANY

type overview **bathtub solution**

type 611



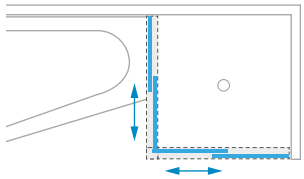



article no. **8834**

bathtub solution –
guide rail mounted to the glass

type 615 (L/R)



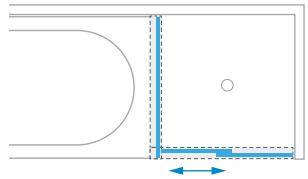



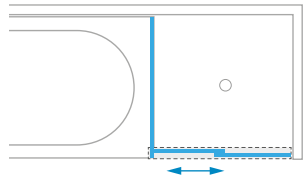



article no. **8832**

bathtub solution –
guide rail all sided





niche showers **– type 104**



niche showers **– type 104 L/R** (example: door closes left)

MADE IN GERMANY



TF ST



guide rail **mounted to the wall**

basic contents

article no.	piece	article description
8822ZNOP-LW	1x	set with 2 carriages
8822ZN_-BFL-8	1x	floor guide
8820-40_	1x	guide rail
8820-41_	1x	front cover panel
8820-42_	1x	pressure bar for side panel in top frame
8820-43_	1x	filler profile in the top frame
8822ZN_-EL	1x	wall bracket on the side panel
8822ZN_-WR	1x	wall bracket at the doorway
8861KU0-8-2500	1x	sealing profile
8820-87	1x	installation aid for edge distances

contents depending on size

article no.	piece	article description
8822ZN0-BWR	1x	angle bracket for big showers right
8822ZN0-BWL	1x	angle bracket for big showers left
8822ZN0-BW	2x	angle bracket for small showers
8822RAL7016-SSDD-20	1x	softstopp double-sided (20 kg)
8822RAL7016-SSDD	2x	softstopp double-sided (32 kg)
8822RAL7016-SSD-32	2x	softstopp single-sided (32 kg)
8822RAL7016-SSD-60	2x	softstopp single-sided (60 kg)
8822MS_-AS	1x	door-stop on the door panel
8822VA-AP	1x	door-stop in the wall bracket
8820-55KU	8–12x	plastic clips for cover (quantity depending on size)

standard sizes (LM) and **entry dimension (DM):**

8823_-104L/R-120:
LM: 950 – 1200 mm DM = max. 540 mm

8823_-104L/R-140:
LM: 1200 – 1400 mm DM = max. 640 mm

8823_-104L/R-160:
LM: 1400 – 1600 mm DM = max. 740 mm

8823_-104L/R-180:
LM: 1600 – 1800 mm DM = max. 840 mm

other sizes on request!

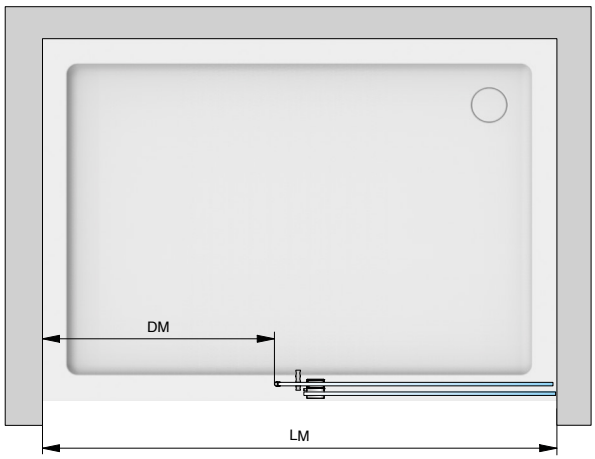

MADE IN GERMANY

niche showers **– type 104 L/R** (example: door closes left)

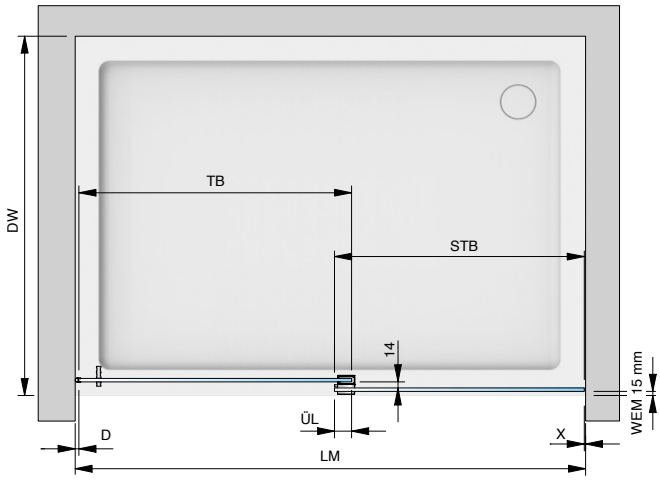

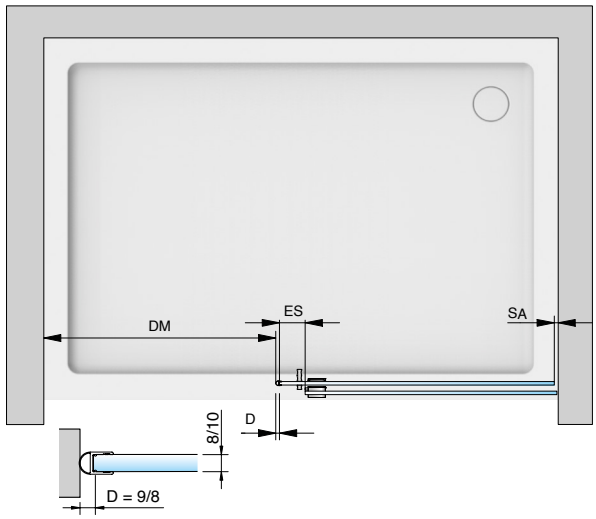

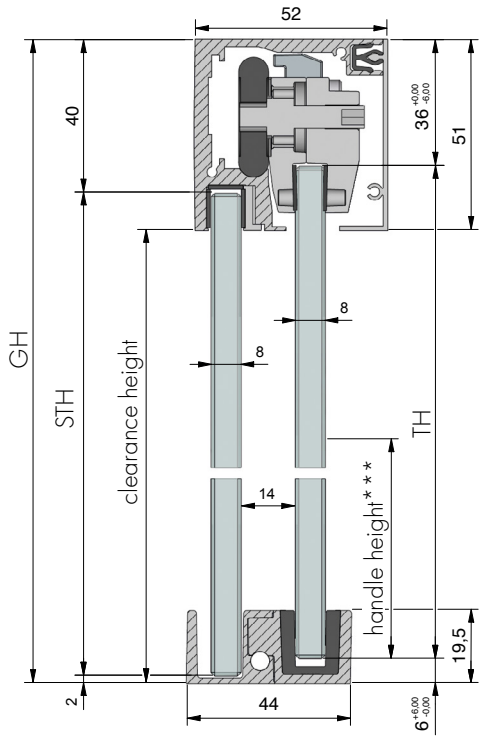

*** Standard 1.050 mm

legend:

LM	=	total clearance
DW	=	shower tray
GH	=	total height
TF	=	door panel
TB	=	door width
TH	=	door height
ST	=	side panel
STB	=	side panel width
STH	=	side panel height
DM	=	threshold dimension
ÜL	=	side panel door overlap (** empfohlen 40 mm)
ES	=	side panel door overlap (recommended 60 mm)
SA	=	stopper distance
D	=	seal
RA	=	edge distance
WEM	=	tray inset dimension
X	=	detail of side panel mounting (depending on hardware)

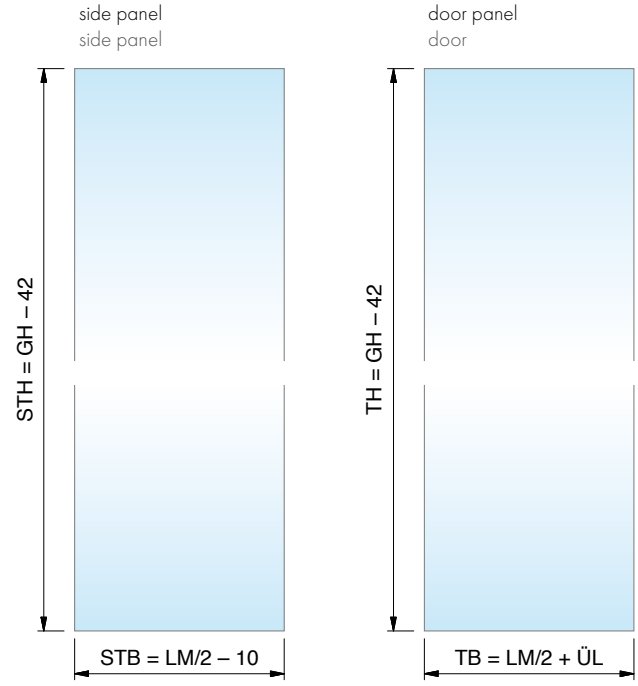

rule of thumb*

side panel width (STB)	=	LM/2 – 10
side panel height (STH)	=	GH – 42
door width (TB)	=	LM/2 + ÜL**
door height (TH)	=	GH – 42
length of guide rail / cover	=	LM – 25

* The rules of thumb serve only for rough dimensioning. In case of planning errors, no claims for compensation can be made.
For the exact calculation of the glass panels, please use our calculation tool at www.pauli.de or contact our application technicians.

** recommended 40 mm

TF ST



niche showers **– type 104 L/R** (example: door closes left)

article no.	article description
8823__-104L120	EVERYSPACE niche shower – type 104 L/R (example: door closes left), without Softstopp

MADE IN GERMANY

total clearance (LM) from **950 – 1200 mm**

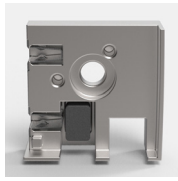

wall bracket on the side panel
article no.: 8822ZN_-EL/ER

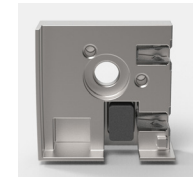

wall bracket at the doorway
article no.: 8822ZN_-WL/WR

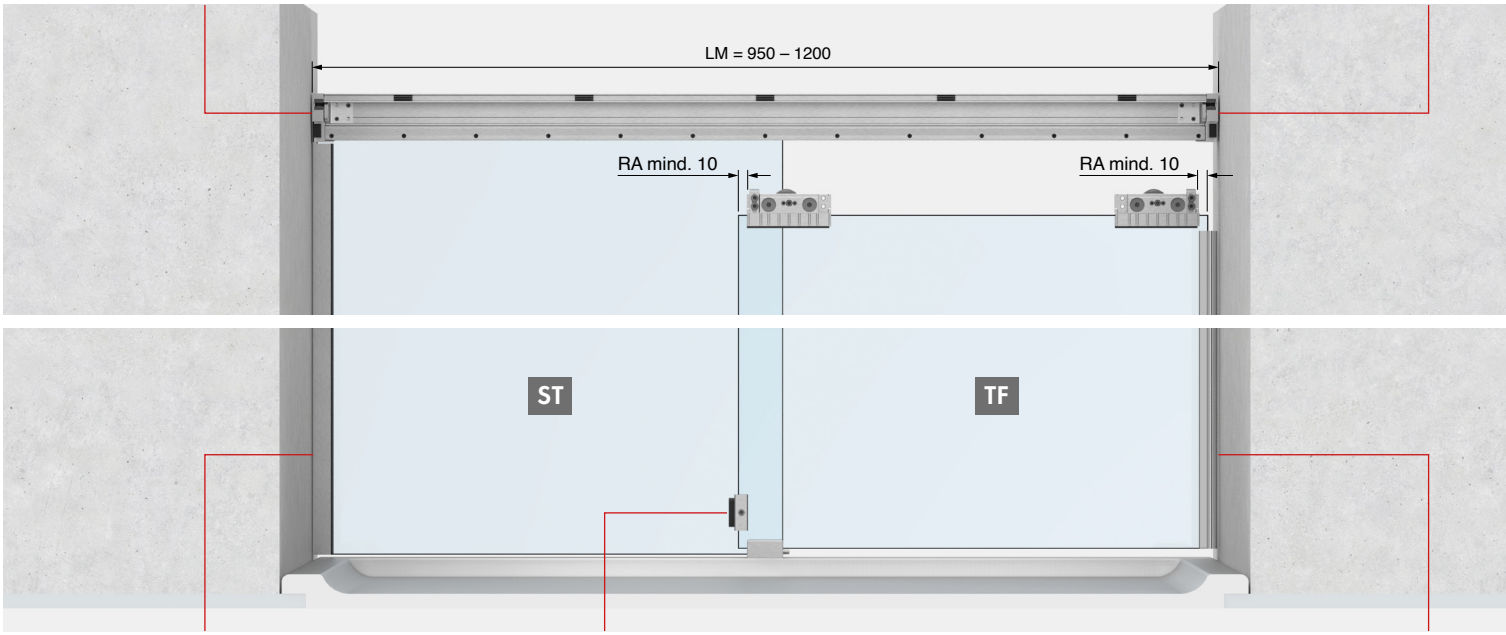



example U-Profil 8830
see page 289



door-stop on the door panel
article no.: 8822MS_-AS

optional



softstopp single-sided (20 kg)
article no.: 8822RAL7016-SSD-20



article no.:8861KU0-8-2500

TF ST



niche showers **– type 104 L/R** (example: door closes left)

article no.	article description
8823__-104L120S	EVERYSPACE **COMFORT** niche shower – type 104 L/R (example: door closes left), with 1x Softstopp SSDD

MADE IN GERMANY

total clearance (LM) from **950 – 1200 mm**



wall bracket on the side panel
article no.: 8822ZN_-EL/ER

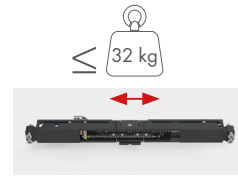

softstopp double-sided (32 kg)
article no.: 8822RAL7016-SSDD



wall bracket at the doorway
article no.: 8822ZN_-WL/WR

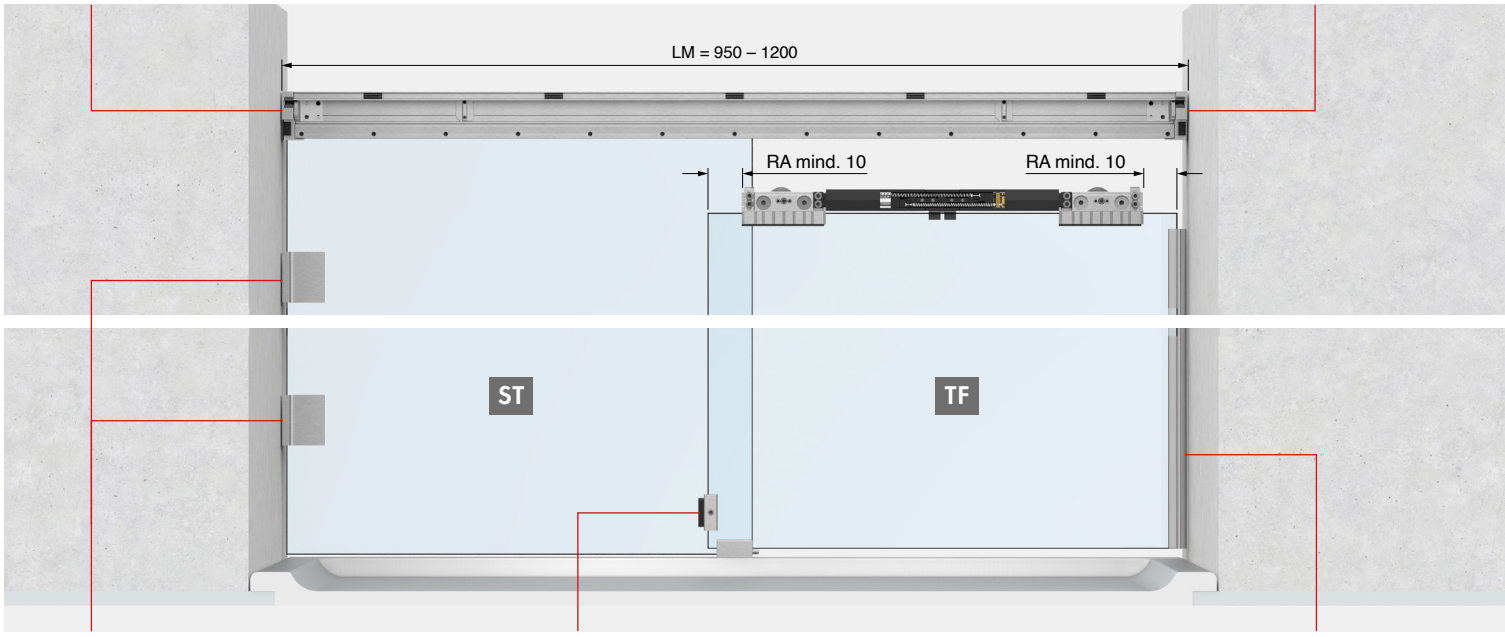

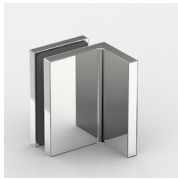

example FLAMEA+ 8194ZN
see page



door-stop on the door panel
article no.: 8822MS_-AS

optional



also possible without softstopp.
article no.: 8823__-104L120



article no.: 8861KU0-8-2500



corner showers **– type 209**



corner showers – type 209

MADE IN GERMANY



ST TF TF ST

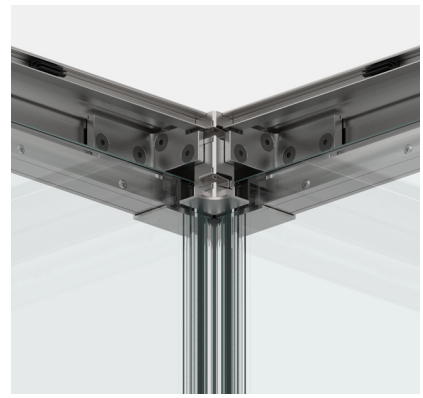

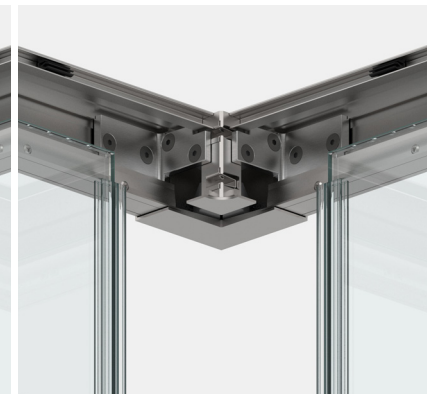

corner connector for **corner entry**

standard sizes (LM) and **threshold dimension (DM):**
8825_-209-100: LM: 750 – 1000 mm DM = max. 580 mm
8825_-209-120: LM: 950 – 1200 mm DM = max. 720 mm
8825_-209-140: LM: 1200 – 1400 mm DM = max. 860 mm
8825_-209-160: LM: 1400 – 1600 mm DM = max. 1000 mm
other sizes on request!

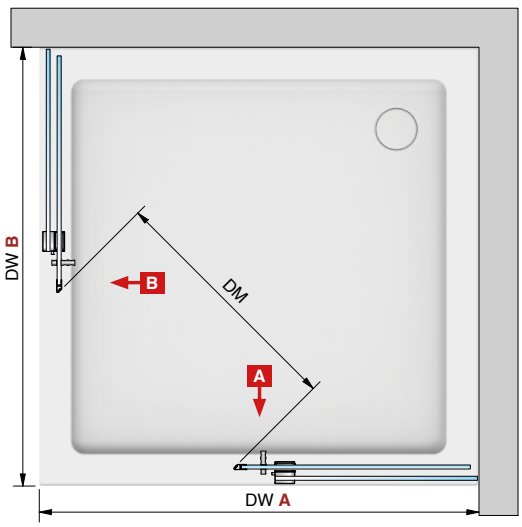

basic contents

article no.	piece	article description
8822ZNOP-LW	2x	set with 2 carriages
8822ZN_-BFL-8	1x	floor guide left
8822ZN_-BFR-8	1x	floor guide right
8820-40_	2x	guide rail
8820-41_	2x	front cover panel
8820-42_	2x	pressure bar for side panel in top frame
8820-43_	2x	filler profile in the top frame
8822ZN_-EL	1x	wall bracket on the side panel left
8822ZN_-ER	1x	wall bracket on the side panel right
8822ZN_-ETT90	1x	Eckverbinder für Eckeinstieg
8851KU0-8-2500	1x	sealing profile
8820-87	1x	installation aid for edge distances

contents depending on size

article no.	piece	article description
8822ZN0-BWR	2x	angle bracket for big showers right
8822ZN0-BWL	2x	angle bracket for big showers left
8822ZN0-BW	4x	angle bracket for small showers
8822RAL7016-SSDD-20	2x	softstopp double-sided (20 kg)
8822RAL7016-SSDD	2x	softstopp double-sided (32 kg)
8822RAL7016-SSD-32	4x	softstopp single-sided (32 kg)
8822RAL7016-SSD-60	4x	softstopp single-sided (60 kg)
8822MS_-AS	2x	door-stop on the door panel
8822VA-AP	2x	door-stop in the wall bracket
8820-55KU	10 – 16x	plastic clips for cover (quantity depending on size)

corner showers – type 209

MADE IN GERMANY

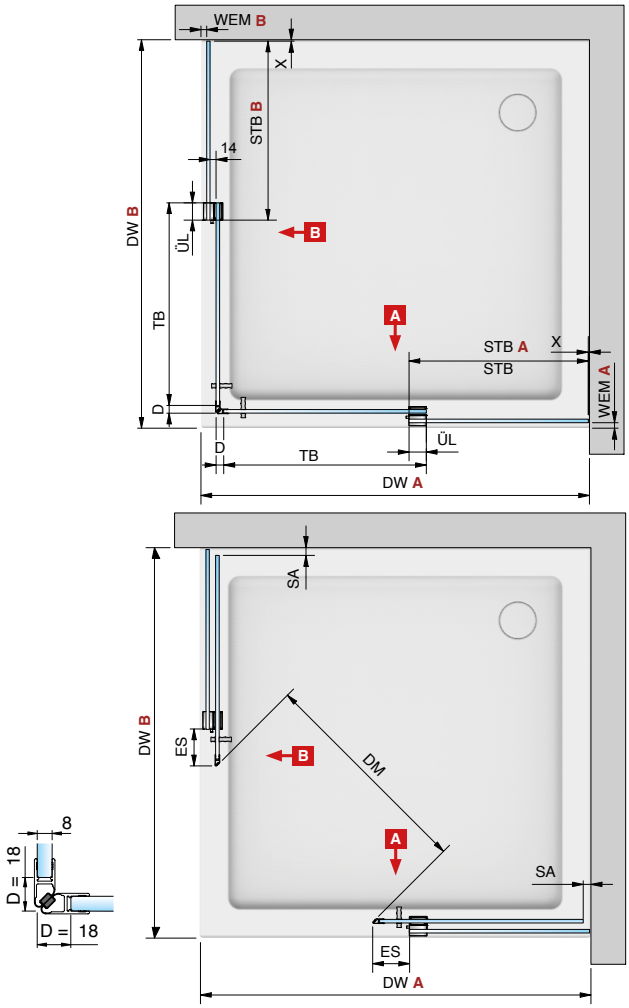

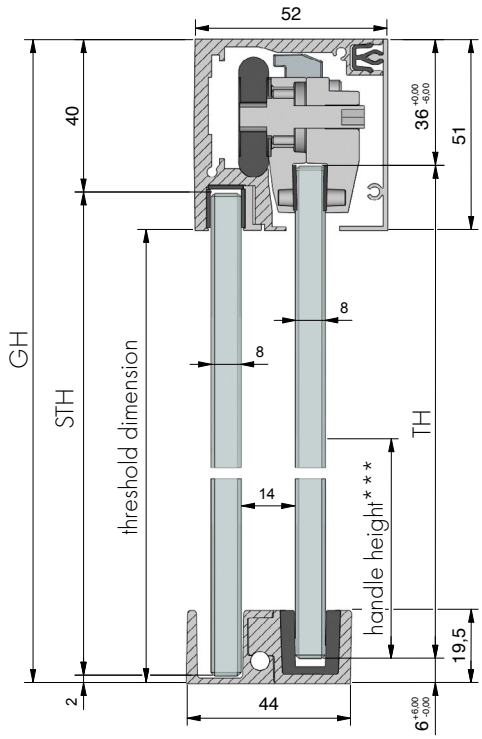

*** Standard 1.050 mm

legend:

LM	=	total clearance
DW	=	shower tray
GH	=	total height
TF	=	door panel
TB	=	door width
TH	=	door height
ST	=	side panel
STB	=	side panel width
STH	=	side panel height
DM	=	threshold dimension
ÜL	=	side panel door overlap (** recommended 40 mm)
ES	=	side panel door overlap (recommended 60 mm)
SA	=	stopper distance
D	=	seal
RA	=	edge distance
WEM	=	tray inset dimension
X	=	detail of side panel mounting (depending on hardware)

rule of thumb*

** empfohlen 40 mm

side panel width (STB) **B**	=	((DW **B** – WEM **A**-45)/2) – 10
side panel width (STB) **A**	=	((DW **A** – WEM **B**-45)/2) – 10
side panel height (STH)	=	GH – 42
door width (TB) **B**	=	((DW **B** – WEM **A** – 45)/2) + ÜL**
door width (TB) **A**	=	((DW **A** – WEM **B** – 45)/2) + ÜL**
door height (TH)	=	GH – 42
length of guide rail / cover **B**	=	DW **B** – WEM **A** – 64
length of guide rail / cover **A**	=	DW **A** – WEM **B** – 64

* * The rules of thumb serve only for rough dimensioning. In case of planning errors, no claims for compensation can be made.
For the exact calculation of the glass panels, please use our calculation tool at www.pauli.de or contact our application technicians.

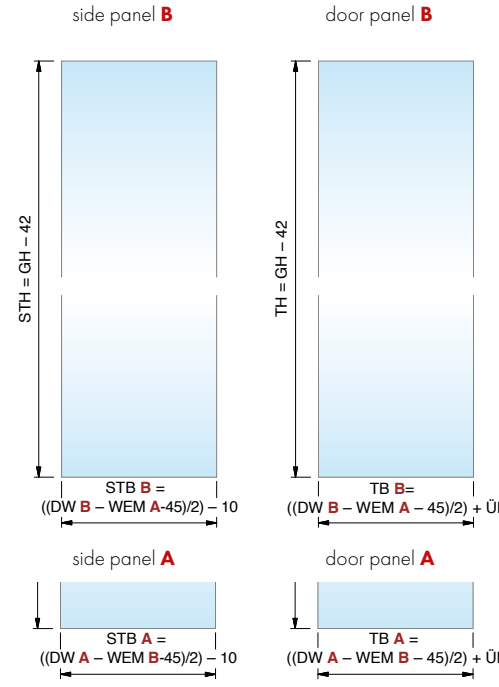

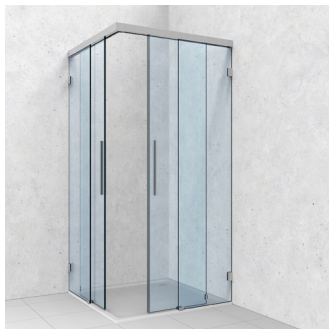

corner showers – **type 209**

article no.	article description
8825__-209-120S	EVERYSPACE **COMFORT** corner shower, with double sided Softstopp SSDD

shower tray (DW) from **950 – 1200 mm**



wall bracket on the side panel
article no.: 8822ZN_-EL/ER



softstopp double-sided (32 kg)
article no.: 8822RAL7016-SSDD

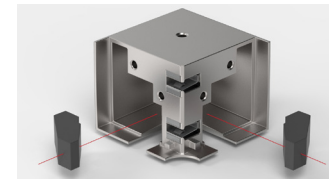

corner bracket
article no.: 8822ZN_-ETT90

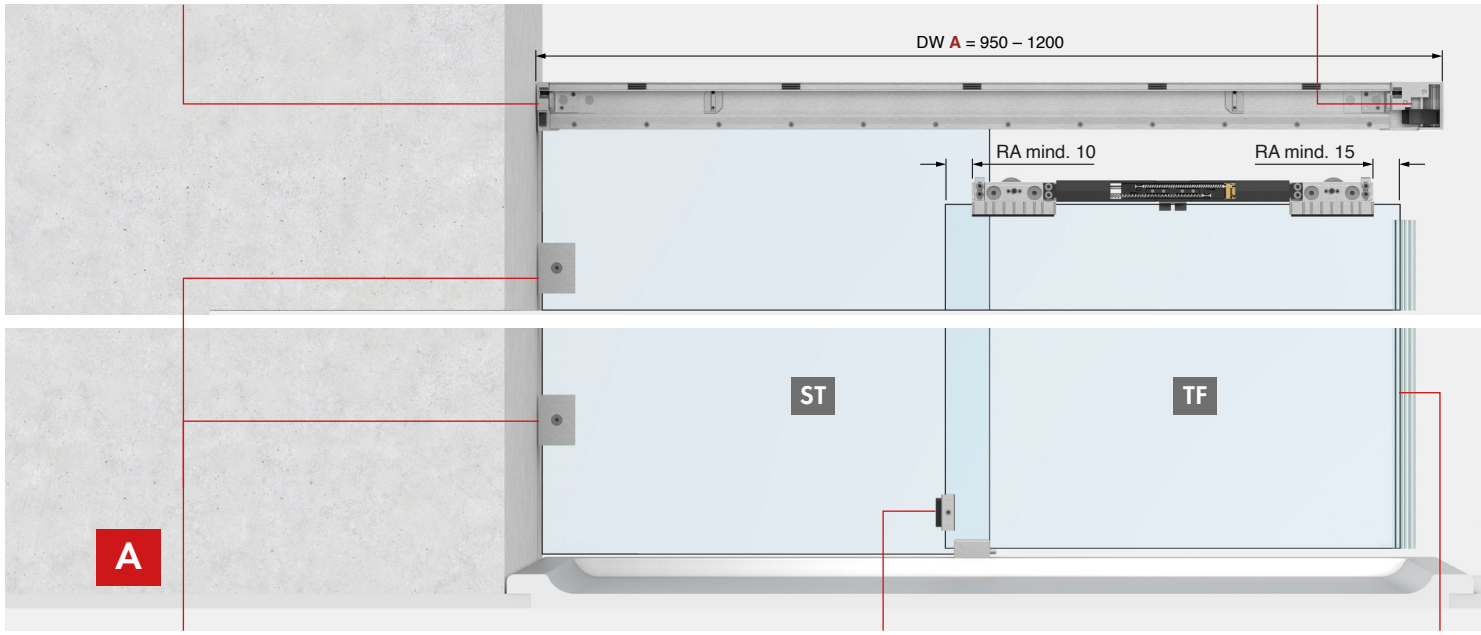



angle bracket – 8178ZN
see page 170

optional

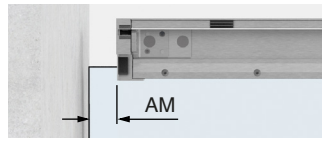

guide rail clamped onto the side panel
further info in the technical catalog on page 78



door-stop on the door panel
article no.: 8822MS_-AS

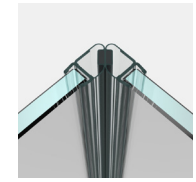

article no.: 8851KU0-8-2500

corner showers – **type 209**

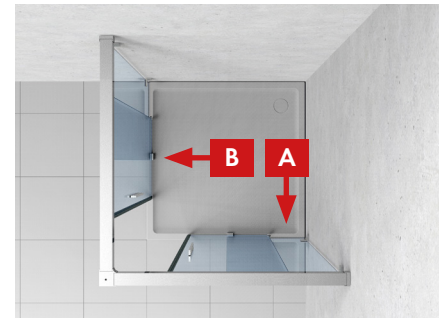

shower tray (DW) from **950 – 1200 mm**

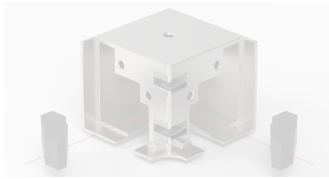



softstopp double-sided (32 kg)
article no.: 8822RAL7016-SSDD

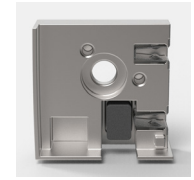

wall bracket on the side panel
article no.: 8822ZN_-EL/ER

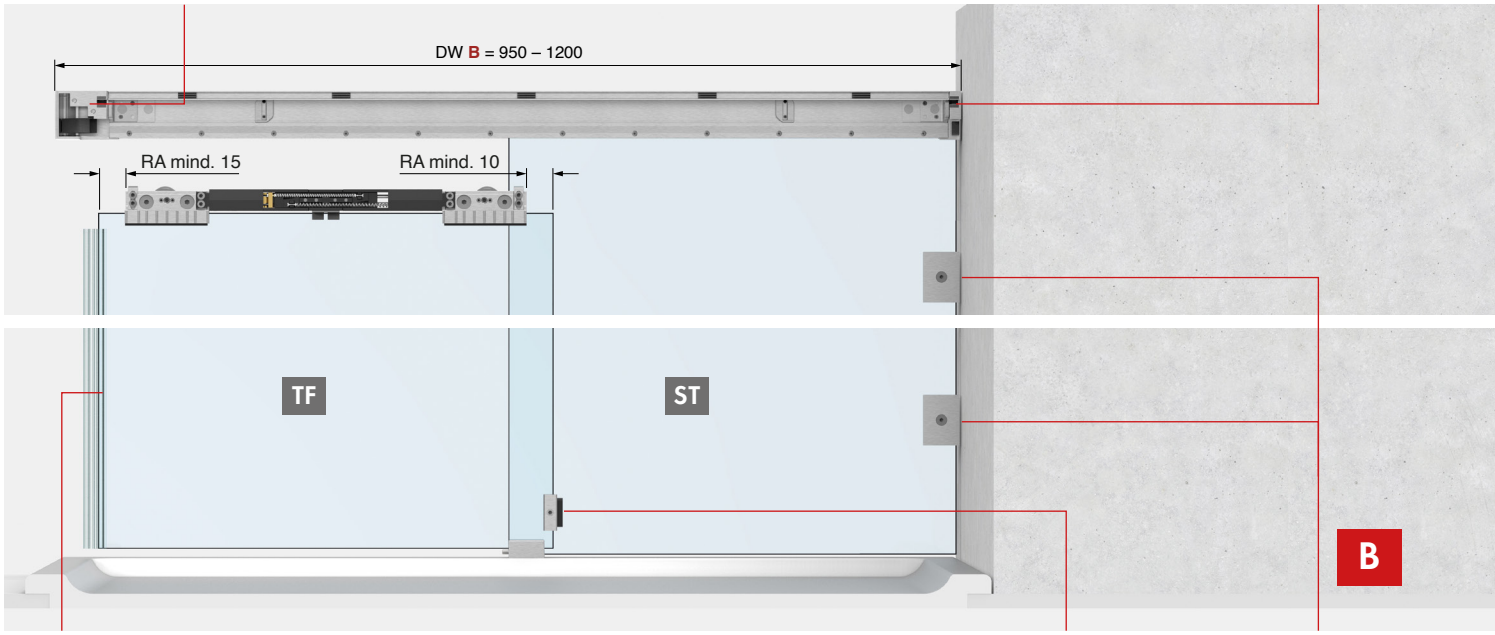

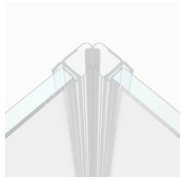

optional



also possible without softstopp.
article no.: 8825__-209-120



door-stop on the door panel
article no.: 8822MS_-AS



angle bracket – 8178ZN
see page 170



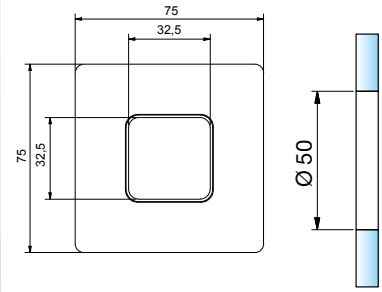

Réf. Art.	Finition	Epaisseur verre	Description article	Col./Pc.
8371MS7 8371MS10 8371MSPVD22 8371MSPVD35	chromé brillant chromé mat effet inox noir mat	8 mm 10 mm 12 mm	Poignée cuvette, ouverte, à coller, Ø 50 mm, 5,5 mm en saillie	1/1



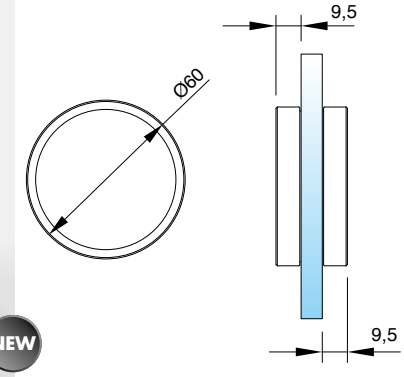

Réf. Art.	Finition	Epaisseur verre	Description article	Col./Pc.
8822MS7-MG 8822MSPVD35-MG 8822VA-MG*	chromé brillant noir mat	6-12 mm	Poignée cuvette à coller, 9,5 mm en saillie	1/1

*coming soon



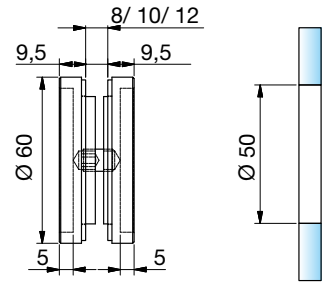

Réf. Art.	Finition	Epaisseur verre	Description article	Col./Pc.
8514MS7 8514VA	chromé brillant inox brossé	8/10/12 mm	poignée coquille fermée Ø 60 mm, 9,5 mm en saillie	1/1



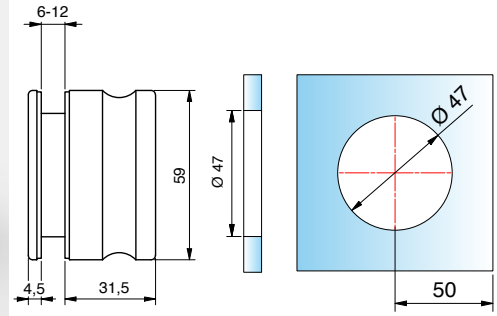

Réf. Art.	Finition	Epaisseur verre	Description article	Col./Pc.
8822VA-MGE	inox brossé	6-12 mm	bouton double à visser	1/1



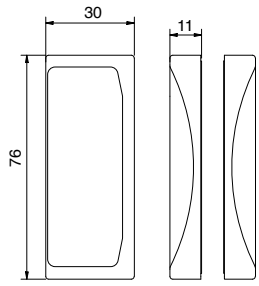

Réf. Art.	Finition	Epaisseur verre	Description article	Col./Pc.
8822ZN5-MGH 8822ZN1-MGH 8822ZNPVD20-MGH 8822ZNPVD22-MGH 8822ZN135-MGH	chromé brillant chromé mat finition or effet inox noir profond mat	6-13,52 mm	Poignée double auto-collante	1/1



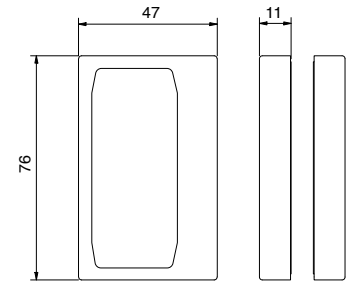

Réf. Art.	Finition	Epaisseur verre	Description article	Col./Pc.
8822ZN5-MGV 8822ZN1-MGV 8822ZNPVD20-MGV 8822ZNPVD22-MGV 8822ZN135-MGV	chromé brillant chromé mat finition or effet inox noir profond mat	6-13,52 mm	Poignée double autocollante	1/1

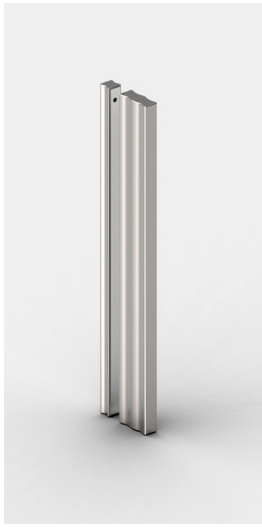

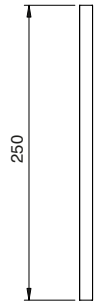

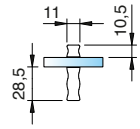

article no.	finish*	glass thickn.	article description	pu/pieces
8822MS7-SG-250	gloss chrome	6-12 mm	glass door handle	1/1
8822MS10-SG-250	matt chrome		self-adhesive	
8822MSPVD35-SG-250	black matt			

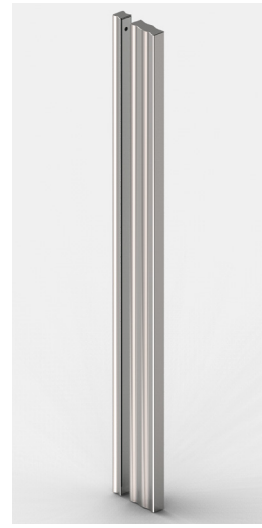

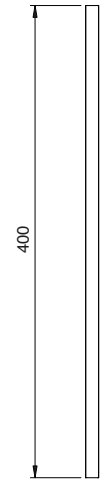

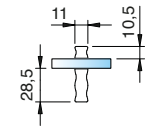

article no.	finish*	glass thickn.	article description	pu/pcs
8822MS7-SG-400	gloss chrome	6-12 mm	glass door handle	1/1
8822MS10-SG-400	matt chrome		self-adhesive	
8822MSPVD35-SG-400	black matt			

Note: The self-adhesive handles must not be bonded to coated glass. The surface must be cleaned and degreased before bonding.
Press the handles firmly after bonding, e.g. apply pressure with a clamp.



article no.	article description	pu/pieces
8822KU-ML	assembly aid for glass door handle, self-adhesive	1/1





article no.	article description	pu/pieces
8001ST8	torque wrench with setting scale (2,5-25 Nm) - automatic triggering	1/1

8001ST8, torque wrench with setting scale		
size = maximum torque	Nm	25
tightening value (scale range)	Nm	2,5-25
scale graduation, 1 graduation =	Nm	0,1
overall length	mm	230
weight	kg	0,4
square drive inch	Zoll	1/4"

custom solutions

The versatility of **EVERYSPACE** and **EVERYSPACE COMFORT** knows almost no limits. There are many possibilities to use our sliding door system in the commercial and private sector. For small layouts, the system shows its strengths to its advantage.

Thanks to its **high load-bearing capacity and the many installation options**, it is equally suited for large bathrooms an





*mit neuer floor guide 3447ZN_-BFD



handicapped accessible installation situation with large corner entry and barrier-free floor



clever solutions for the commercial and hotel sector: 2 in 1 combination of shower and toilet







refined bath and walkin solutions

technical summary

materials
- guide rail made of high-strength aluminum alloy
- hardware and attachments made of solid, high-quality zinc die-cast
- rollers made of robust fiberglass-reinforced polyamide

surface
- E3/50 – gloss chrome
- E6EV5 – gloss anodized
- E6C35 – black matt

system features
- guide rail can be fastened directly to the side panel, without
- screw connection to the wall
- side panel without complex silicone fixation to the guide rail
- single or double-sided dampening unit (incl. retraction function)
- guide rail fastening without glass holes
- simple height adjustment (± 3 mm)
- with patent-pending glass thickness adjustment
- door panel easy to hang in place
- floor guide is separable for easy installation and cleaning
- depending on the position of the shower head, no sealing profile is required for the overlapping glass elements (40 mm) no sealing profile is necessary.
- bonding handles with optimized adhesive force, therefore no glass processing
- necessary (other handles are also available on request)
- optimized space-saving solutions for small bathrooms

glass thickness	FTG: 8 and 10 mm LSG with FTG: 8.76 and 10.76 mm
maximum door weight	32 kg / 60 kg (with and without damper)
maximum system height	2500 mm
maximum system width/depth	2500 mm depending on the installation situation. contact our application technicians.
maximum door panel width	1000 mm
minimum door panel width	400 mm
aspect ratio	maximal 5 : 1
adjustment options	with patent-pending glass thickness adjustment height adjustment ±3 mm

our service

measurement aids

On **pauli.de/en** you will find different measurement sheets for easy planning and realization of your project. Our application technicians are at your disposal.

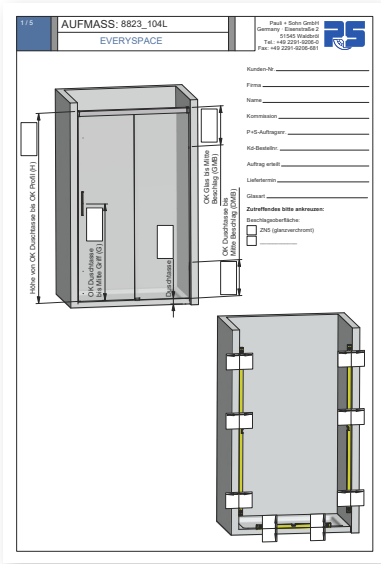

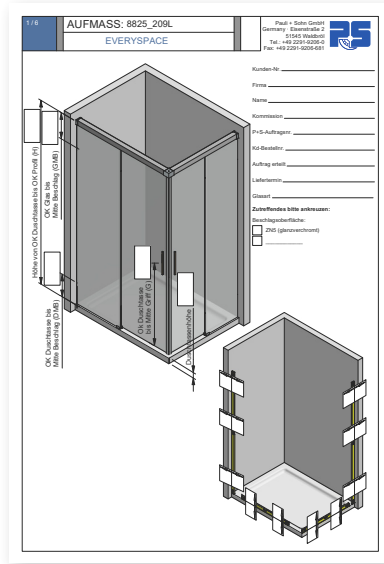

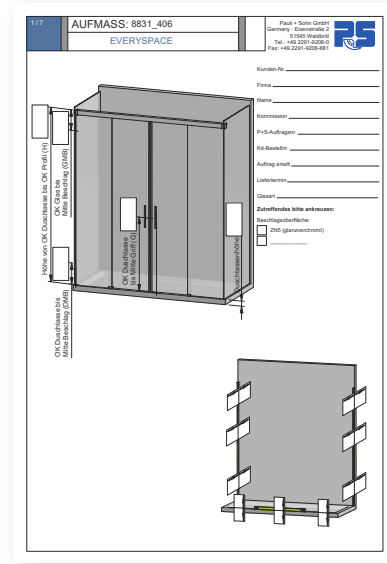

glass calculation

Use our new planning tool at **pauli.de/en/cloud** for the calculation of glass sizes. Need more help? We can support you in every phase of your project. Just give us a call – 02291 9206 0.

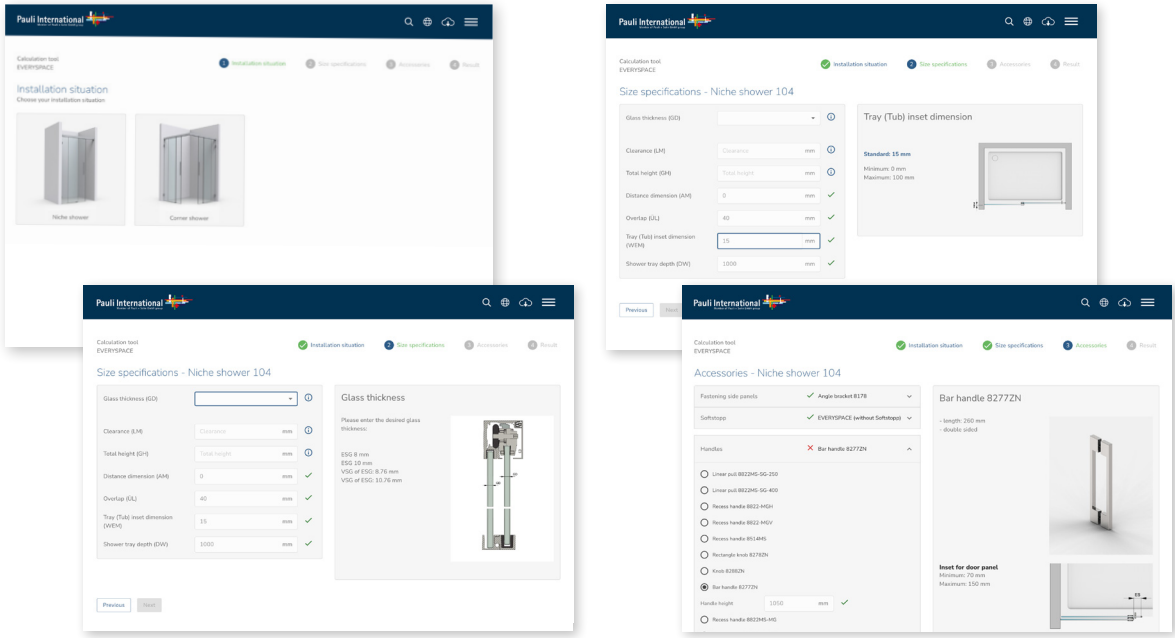

www.pauli.de/en/login



PDF (20 MB)

Many more technical details about EVERYSPACE and EVERYSPACE COMFORT can be found in our extensive technical catalog.
pauli.de/en/service/kataloge-broschueren/#duschen

product presentation EVERYSPACE

Pauli + Sohn
seminar dates
pauli.de/en/terminkalender/



shower system VIVERE II



MADE
IN
GERMANY







VIVERE II - balanced: intuitive and technical

MADE IN GERMANY

Excellent design is not only very attractive, it is also extremely functional. VIVERE II is visually harmonious with its round form in contrast to the edges of bath rooms. Technically, the shower system stands out with the eccentric adjustable glass door point fixtures for a perfect fit, the 3D adjustable wall and angle brackets and countersunk holes for a flush surface on the inside of the glass.

- angle and wall connectors adjustable across three axes
- wall connectors available with raised or flush heads
- easy assembly with optimal wall alignment
- pull-away lower guide for easy cleaning
- eccentric guide rollers allow an adjustment in height and inclination
- custom and special solutions on request
- glass thickness: 8 mm

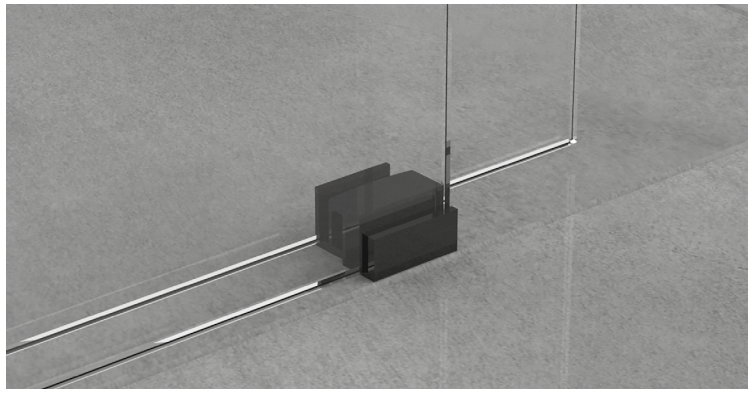

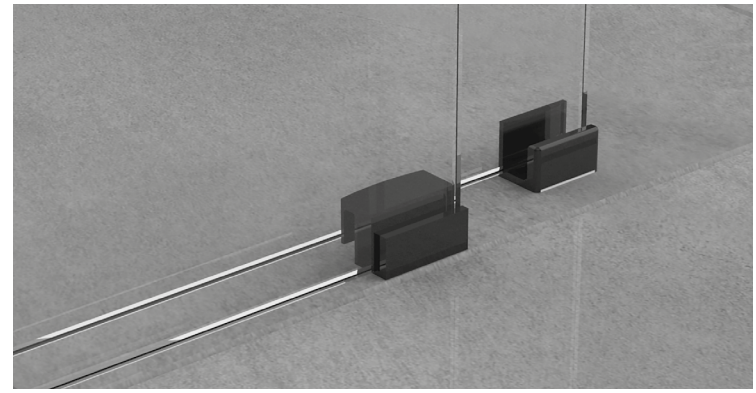

overview
installation situation



niche showers








VIVERE					
8563VA-V (U)	8557VA-V (U)	8549VA-V (U)	8552VA-V (U)	8551VA-V (U)	8553VA-V (U)
8564VA-V (E)	8558VA-V (E)	8549VA-VE (E)	8552VA-VE (E)	8551VA-VE (E)	8553VA-VE (E)
8565VA-V (F)	8559VA-V (F)	8549VA-VF (F)	8552VA-VF (F)	8551VA-VF (F)	8553VA-VF (F)
single rail	double rail	single rail	double rail	single rail	double rail

corner showers



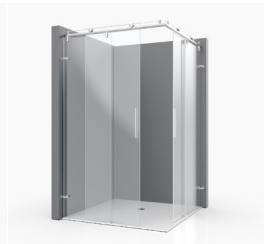

VIVERE		
8560VA-900 (U)	8560VA-1000 (U)	8560VA-V (U)
8561VA-900 (E)	8561VA-1000 (E)	8561VA-V (E)
8562VA-900 (F)	8562VA-1000 (F)	8562VA-V (F)
single rail	single rail	single rail






VIVERE			
–	8555VA-VU (U)	8556VA-VU (U)	8568VA-V (U)
8554VA-V (E)	8555VA-V (E)	8556VA-V (E)	8568VA-VE (E)
8554VA-VF (F)	8555VA-VF (F)	8556VA-VF (F)	8568VA-VF (F)
double rail	double rail	double rail	single rail



circular showers

u-showers





VIVERE		
–	–	–
–	8522VA (E)	8566VA-V (E)
8570VA R500 (F)	–	8567VA-V (F)
single rail	single rail	single rail

(U) = with u-profile
(E) = with wall connector, raised head
(F) = with wall connector, flush

if desired, other variations can be created!

for all available glass-sets, please refer to page 372

single panel niche-situation – width of up to 1200 mm - 8563VA-V | 8564VA-V | 8565VA-V
width of up to 2000 mm - 8557VA-V | 8558VA-V | 8559VA-V



picture shows version single guiding rail 8564VA-V



picture shows version double guiding rail 8557VA-V

DM = (LM + (20 mm - sealing profile))/2 - 80 mm
example: DM = (1150 + (20 mm - 10))/2 - 80 mm
DM = 500 mm

we need the following information on the order sheet:
clear dimension (LM), height of the shower (DH) and gap left for a sealing profile between the glass panel and the wall: 10 mm

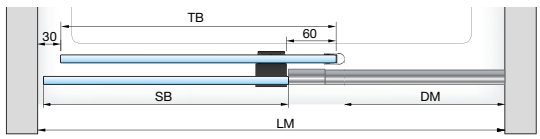

SB = side panel width | TB = door panel width | DM = entry distance | LM = clear distance



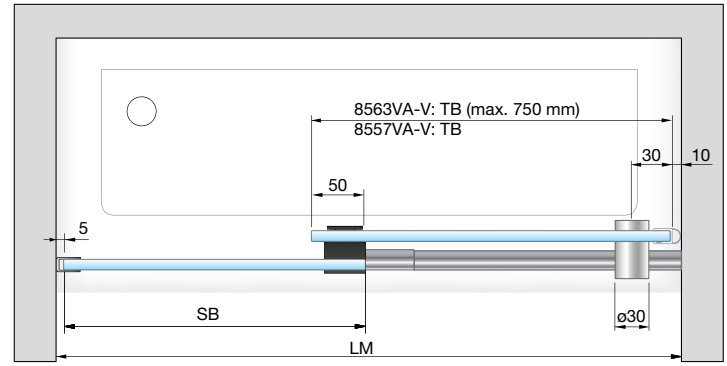

set 8563VA-V: single guiding rail, niche, u-profile, to 1200 mm
set 8557VA-V: double guiding rail, niche, u-profile, to 2000 mm



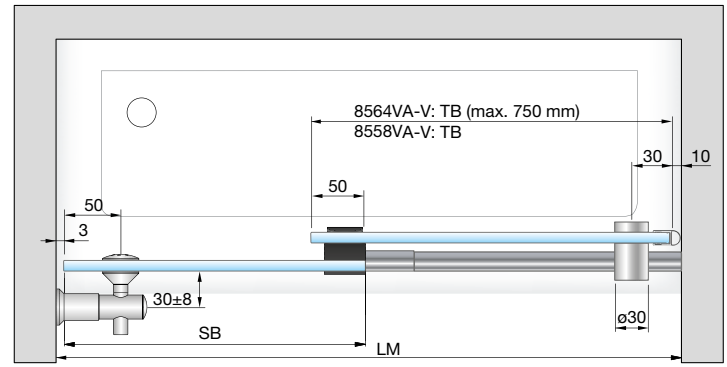

set 8564VA-V: single guiding rail, niche, raised head, to 1200 mm
set 8558VA-V: double guiding rail, niche, raised head, to 2000 mm



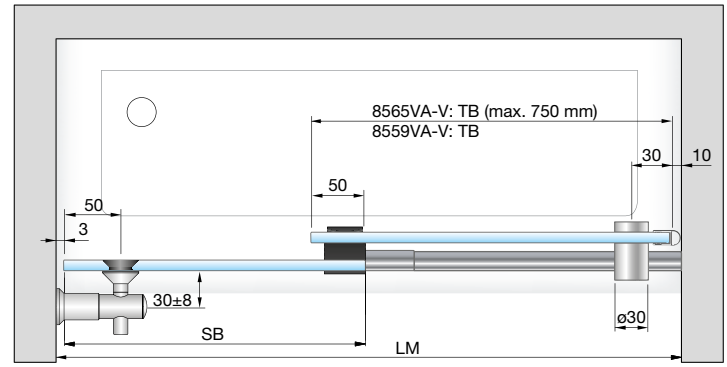

set 8565VA-V: single guiding rail, niche, flush, to 1200 mm
set 8559VA-V: double guiding rail, niche, flush, to 2000 mm

single panel niche-situation – width of up to 2000 mm - 8549VA-V
width of up to 2000 mm - 8552VA-V



picture shows version single guiding rail 8549VA-V



picture shows version double guiding rail 8552VA-V

we need the following information on the order sheet:
clear dimension (LM) and height of the shower (DH)



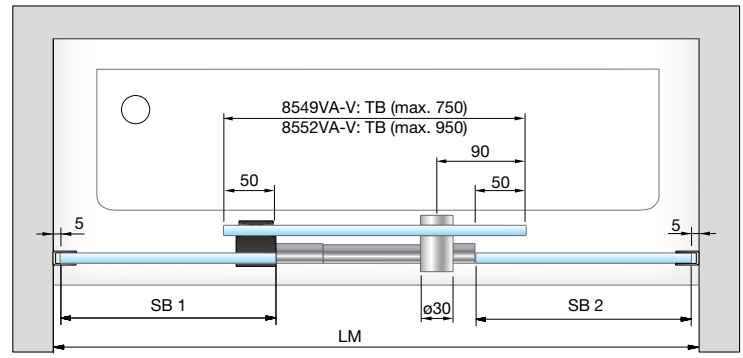

set 8549VA-V: single guiding rail, niche, u-profile, to 1200 mm
set 8552VA-V: double guiding rail, niche, u-profile, to 2000 mm



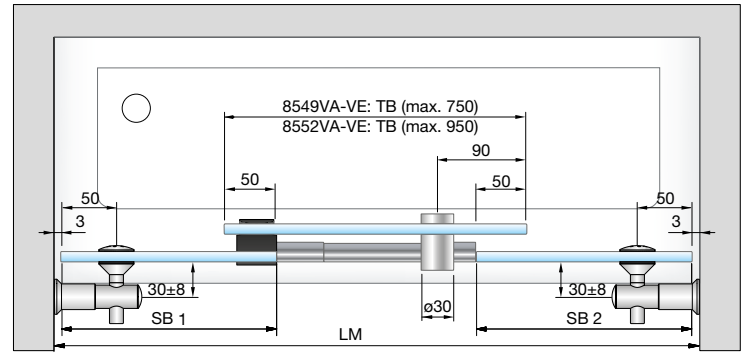

set 8549VA-VE: single guiding rail, niche, raised head, to 2000 mm
set 8552VA-VE: double guiding rail, niche, raised head, to 2000 mm



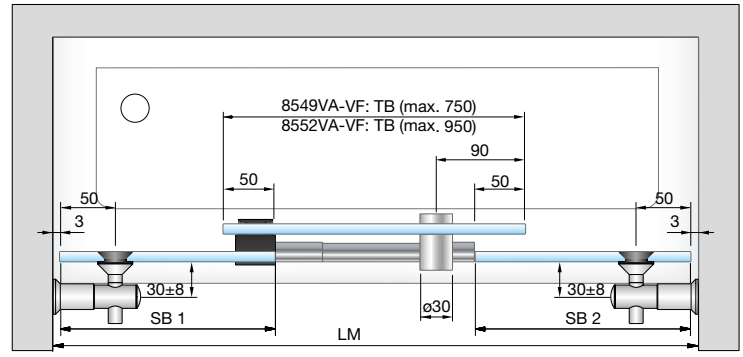

set 8549VA-VF: single guiding rail, niche, flush, to 2000 mm
set 8552VA-VF: double guiding rail, niche, flush, to 2000 mm

SB = side panel width | TB = door panel width | DM = entry distance | LM = clear distance

double panel niche-situation – up to 2000 mm - 8551VA-V
up to 2000 mm - 8553VA-V



picture shows version single guiding rail 8551VA-V



picture shows version double guiding rail 8553VA-V

we need the following information on the order sheet:
clear dimension (LM), height of the shower (DH) and gap left for a sealing profile between the glass panel and the wall 20 mm



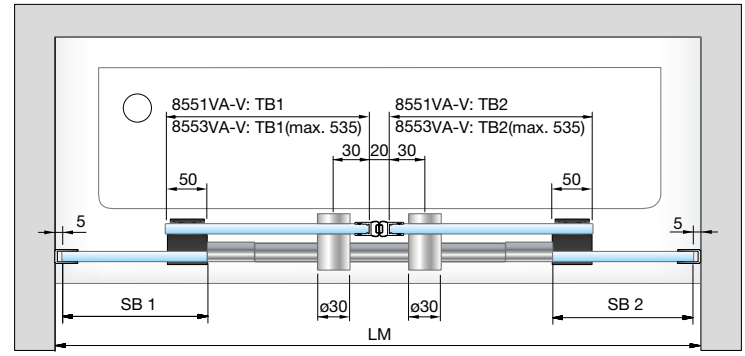

set 8551VA-V: single guiding rail, niche, u-profile, to 1200 mm
set 8553VA-V: double guiding rail, niche, u-profile, to 2000 mm



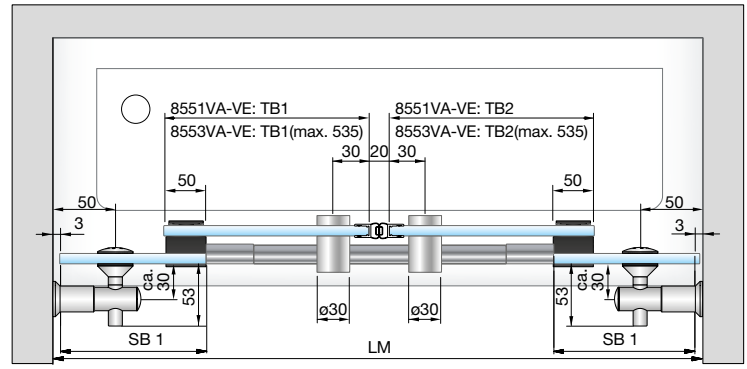

set 8551VA-VE: single guiding rail, niche, raised head, to 2000 mm
set 8553VA-VE: double guiding rail, niche, raised head, to 2000 mm



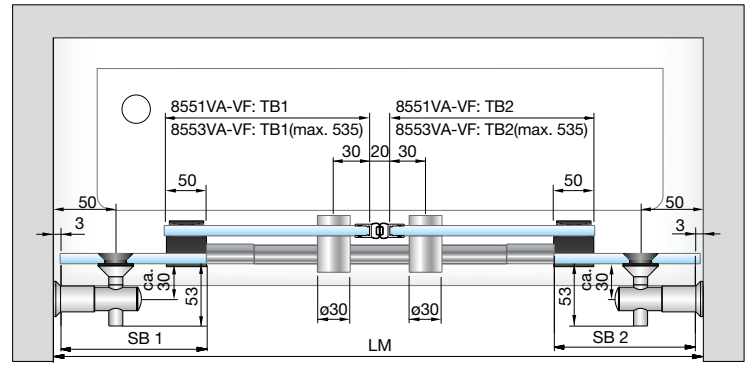

set 8551VA-VF: single guiding rail, niche, flush, to 2000 mm
set 8553VA-VF: double guiding rail, niche, flush, to 2000 mm

SB = side panel width | TB = door panel width | DM = entry distance | LM = clear distance

MADE IN GERMANY



corner shower width of up to 1000 x 1000 mm



picture shows version double guiding rail 8561VA-900

we need the following information on the order sheet:
height of shower (DH), width of the shower tray (DTB), depth of the shower (DTT) and tray offset distance between the outer edge of the side panel and the outer edge of the shower tray (WEM).



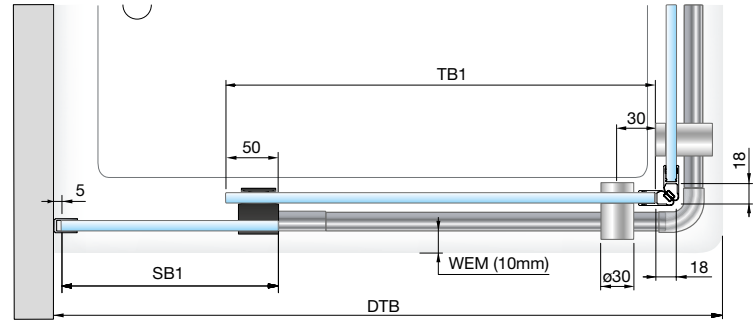

set 8560VA-900: single guiding rail, corner shower, u-profile, shower basin of 900 x 900 mm
set 8560VA-1000: single guiding rail, corner shower, u-profile, shower basin of 1000 x 1000 mm
set 8560VA-V: single guiding rail, corner shower, u-profile, variable size of up to 1000x1000 mm



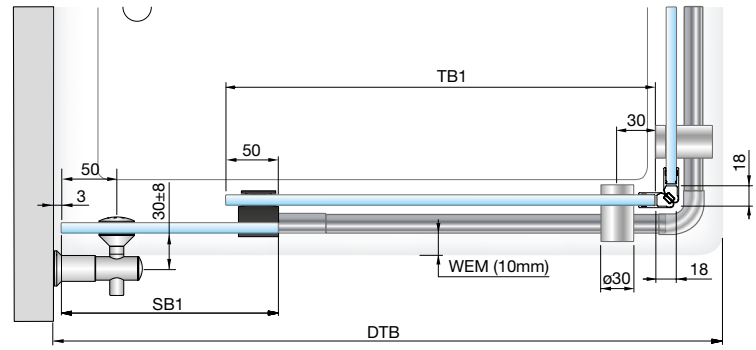

set 8561VA-900: single guiding rail, corner shower, raised head, shower basin of 900 x 900 mm
set 8561VA-1000: single guiding rail, corner shower, raised head, shower basin of 1000 x 1000 mm
set 8561VA-V: single guiding rail, corner shower, raised head, variable size of up to 1000x1000 mm



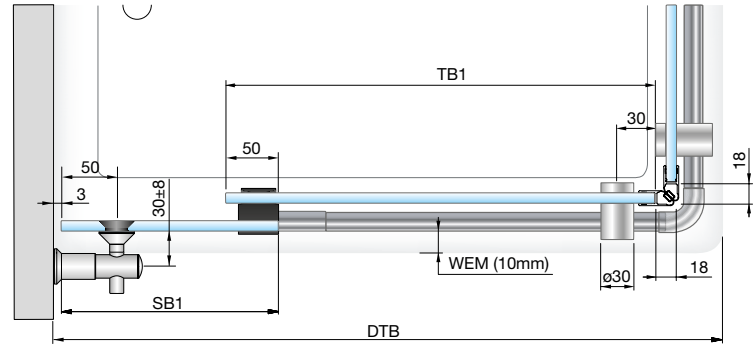

set 8562VA-900: single guiding rail, corner shower, flush, shower basin of 900 x 900 mm
set 8562VA-1000: single guiding rail, corner shower, flush, shower basin of 1000 x 1000 mm
set 8562VA-V: single guiding rail, corner shower, flush, variable size of up to 1000x1000 mm

SB= side panel width | TB = door panel width
DM = entry distance | WEM = distance between the outer edge of the side part and the outer egde of the shower tray | DTB = width of the shower tray | DTT= depth of the shower

U-shower up to 1000x1000 mm - 8566VA-V/8567VA-V



picture shows version single guiding rail 8566VA-V

we need the following information on the order sheet:
height of shower (DH), width of the shower tray (DTB), depth of the shower (DTT) and tray offset distance between the outer edge of the side panel and the outer edge of the shower tray (WEM).



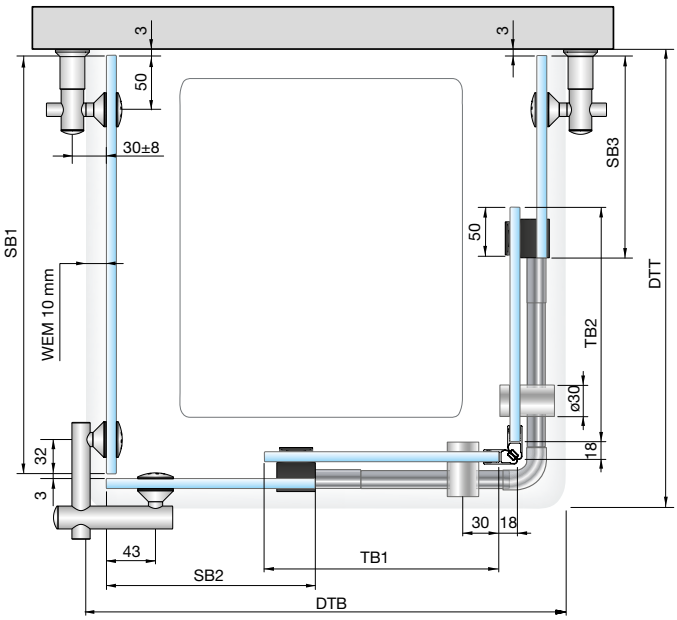

set 8566VA-V: single guiding rail, U shower, raised head



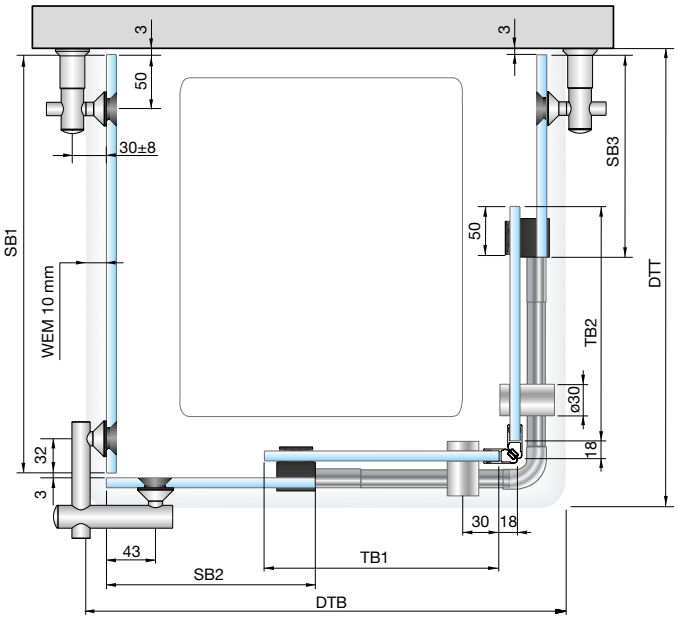

set 8567VA-V: single guiding rail, U shower, flush

SB= side panel width | TB = door panel width
DM = entry distance | WEM = distance between the outer edge of the side part and the outer egde of the shower tray | DTB = width of the shower tray | DTT = depth of the shower

corner shower width of up to 1000 x 1000 mm



picture shows version single guiding rail 8570VA-V

for all available glass-sets, please refer to page 372

art. no. 8581GLAS-R500-900

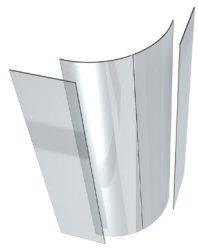



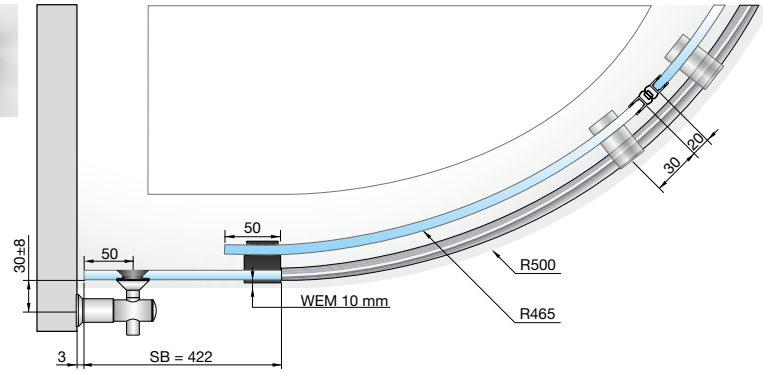

set 8570VA: single guiding rail, circular shower, flush, shower basin of 900 x 900 mm, R500

SB= side panel width
TB = door panel width
DM = entry distance
WEM = distance between the outer edge of the side part and the outer egde of the shower tray
DTB = width of the shower tray
DTT = depth of the shower



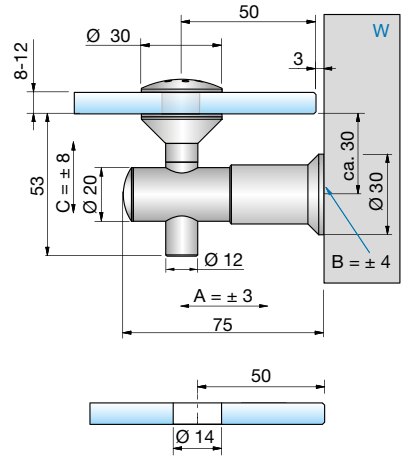

adjustability:
A: ± 3 mm | B: ± 4 mm | C: ± 8 mm
B=adjustability by oblong hole

article no.	finish	glass thickness	article description	features	pu/pieces
7772VA	stainless steel	8-12 mm	wall connector VIVERE, raised head, glass-wall, 90°	fastener adjustable in 3 axes	1/2



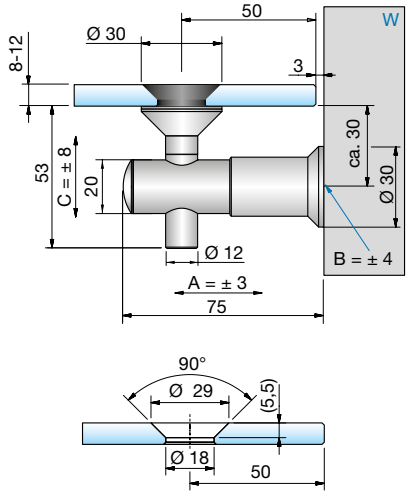

adjustability:
A: ± 3 mm | B: ± 4 mm | C: ± 8 mm
B=adjustability by oblong hole

article no.	finish	glass thickness	article description	features	pu/pieces
7773VA	stainless steel	8-12 mm	wall connector VIVERE, flush, glass-wall, 90°	fastener adjustable in 3 axes	1/2



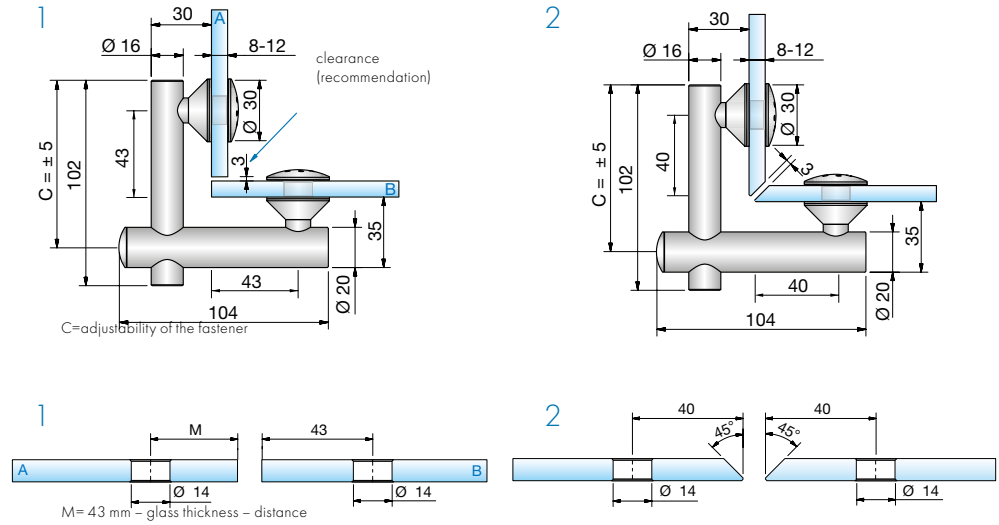

article no.	finish	glass thickness	article description	features	pu/pieces
7774VA	stainless steel	8-12 mm	wall connector VIVERE, raised head, glass-glass, 90°	-	1/2



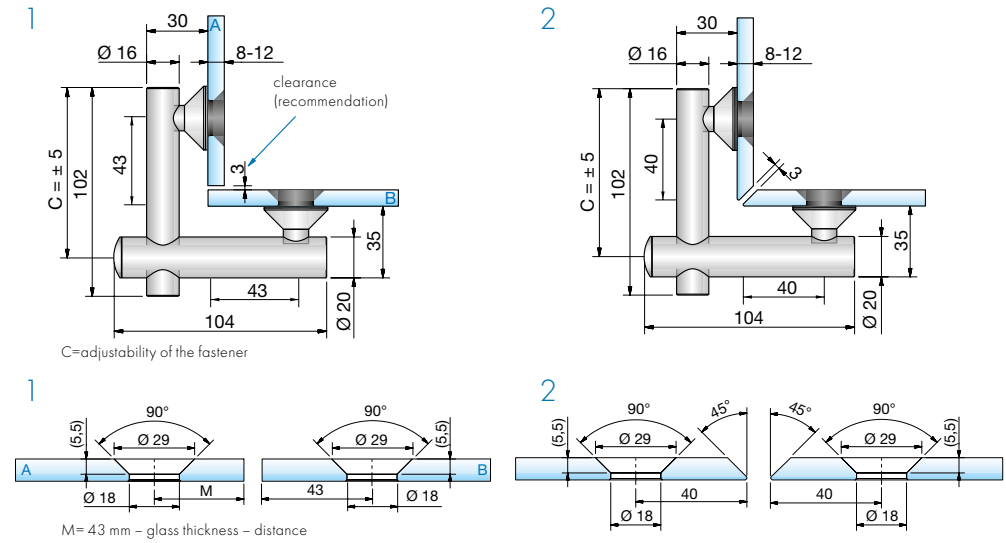

article no.	finish	glass thickness	article description	features	pu/pieces
7775VA	stainless steel	8-12 mm	wall connector VIVERE, flush, glass-glass, 90°	-	1/2

STH = height of side panel | TH = height of the door | DH = height of shower

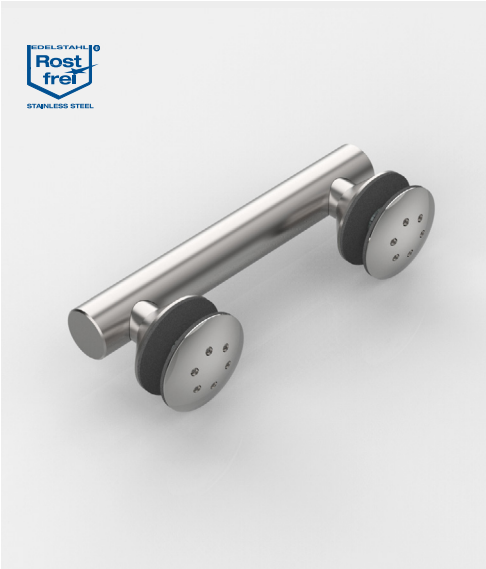

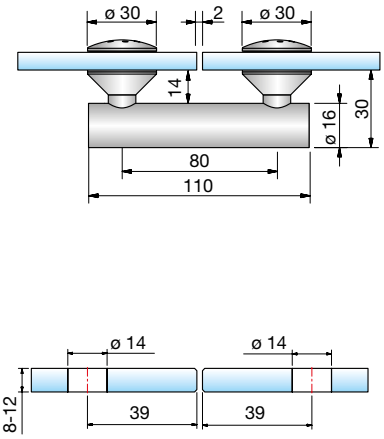

article no.	finish	glass thickness	article description	features	pu/pieces
7777VA	stainless steel	8-12 mm	wall connector VIVERE, raised head, glass-glass, 180°	-	1/2



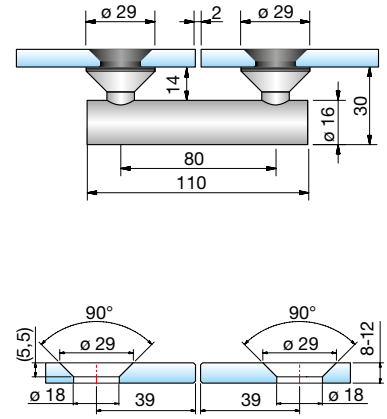

article no.	finish	glass thickness	article description	features	pu/pieces
7775VA	stainless steel	8-12 mm	wall connector VIVERE, flush, glass-glass 180°	2 mm adjustable over 360°	1/2

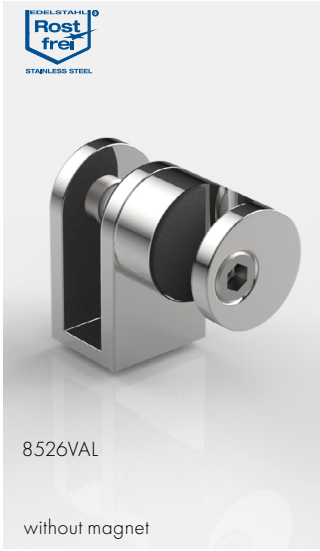

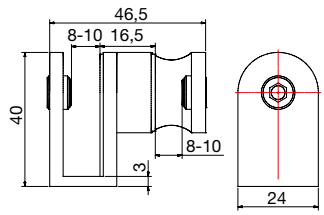

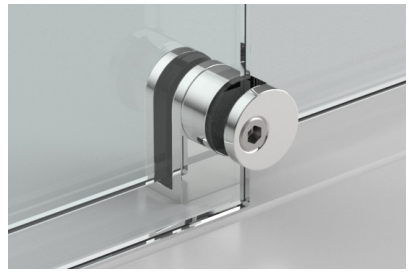

article no.	finish	glass thickn.	article description	pu/pieces
8526VAL	stainless steel	8-10 mm	floor guide, left	1/1
8526VAR	stainless steel	8-10 mm	floor guide, right	

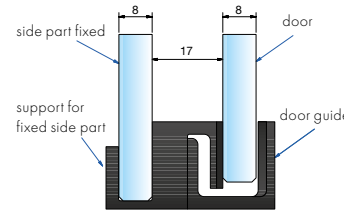



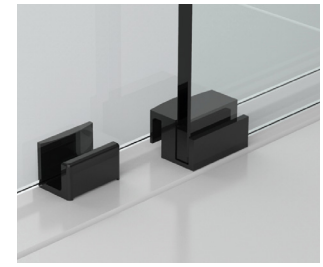

pull-away with magnet

article no.	finish	glass thickn.	article description	pu/pieces
8527KU	plastic black	8 mm	floor guide	1/1
8527KU1	plastic white	8 mm	floor guide	



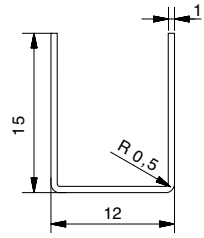

article no.	finish	glass thickn.	article description	pu/pieces
8505VA	stainless steel	≤ 8 mm	u-profile, length =1980 mm	1/1
8505VA-2500	stainless steel	≤ 8 mm	u-profile, length =2500 mm	







article no.	finish	article description	pu/pieces
8546VA4	stainless steel	end plug Ø 30mm	1/1
8548VA	stainless steel	eccentric roller ± 2mm	



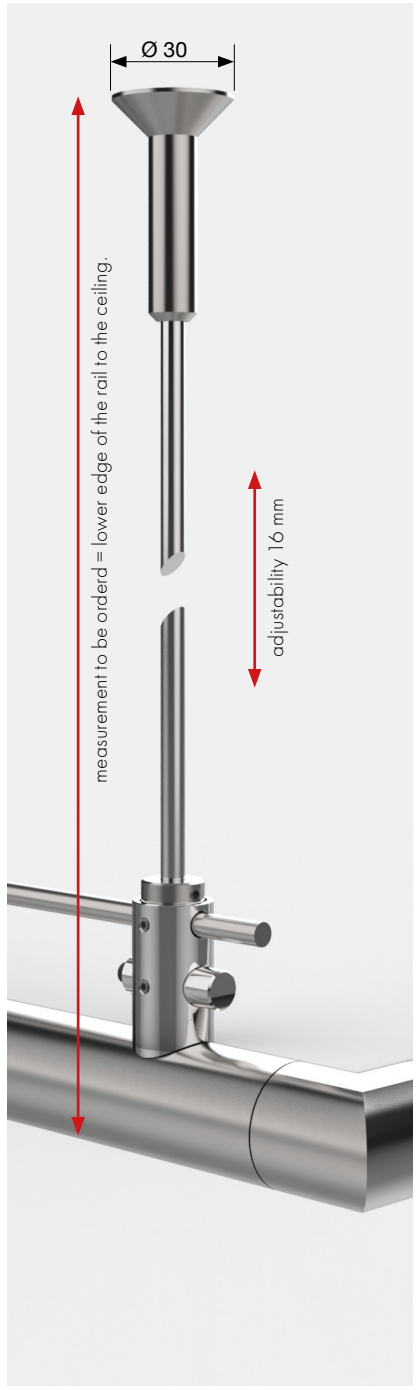

with hanger bolt for
ceiling mounting,
length up to 1000 mm

article no.	finish	article description	pu/pieces
8544VA	stainless steel	ceilling hanger for single guiding rail	1/1
8518VA	stainless steel	ceilling hanger for double guiding rail	



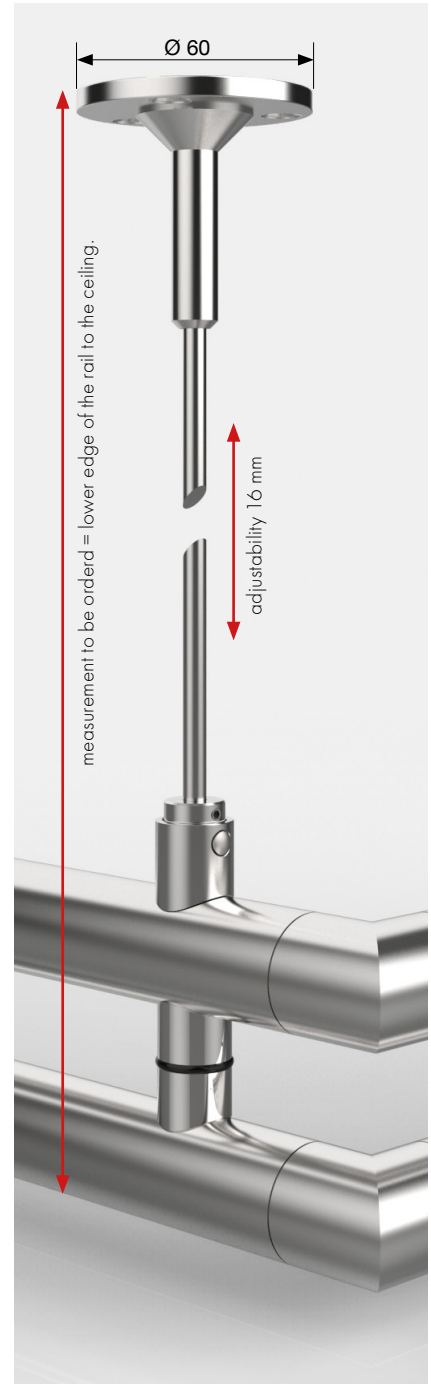

with mounting plate Ø 60 mm,
3 mounting holes for
ceiling mounting,
length up to 1000 mm

article no.	finish	article description	pu/pieces
8545VA	stainless steel	ceilling hanger for single guiding rail	1/1
8519VA	stainless steel	ceilling hanger for double guiding rail	

different glass and wall connections

Different installation situations require different connections. The wall connector pin (standard 8517VA) offers a latent solution. In case of facing difficult subsurfaces, you are able to fix the guiding rail with the wall connection plate (31177VA) by using two screws /dowels.

For parallel mounting, the side connector (8547VA) can be used. our round showers can be fixed by using the special connector (8576VAR/VAL). The ceiling hanger (8544VA/8545VA) offers an additional locking device.







It is also possible to connect to the glass with single and double track tubes. Contact us - we will be happy to advise you!



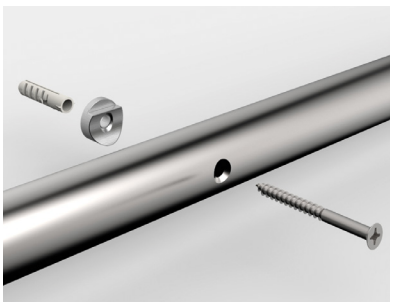

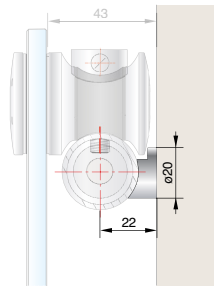



article no.	finish	article description	Ø	pu/pieces
8547VA	stainless steel	wall connector	Ø 20 mm	1/1



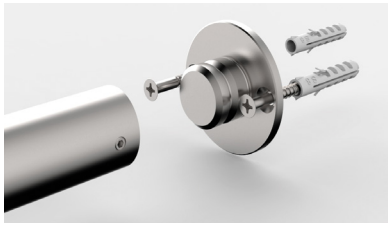

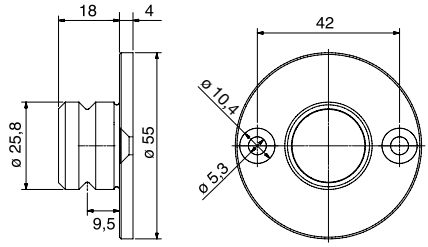



article no.	finish	article description	Ø	pu/pieces
31177VA	stainless steel	wall mount plate with pin	Ø 55 mm	1/1



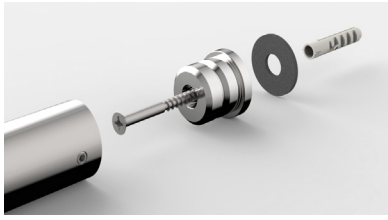

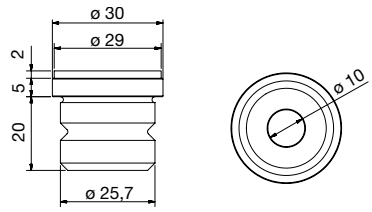



article no.	finish	article description	Ø	pu/pieces
8517VA	stainless steel	wall stud for VIVERE II tube	30 mm	1/1



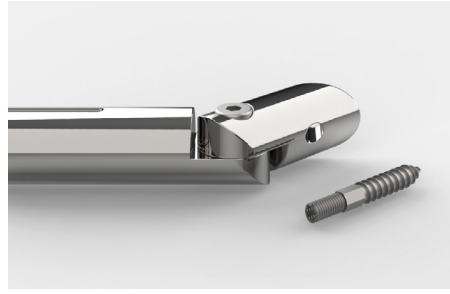



article no.	finish	article description	features	pu/pieces
8576VAL 8576VAR	stainless steel	wall connection with wall connection plate 8545-1VA for round showers	right and left version excl. screw S7991A2D8x16	1/1



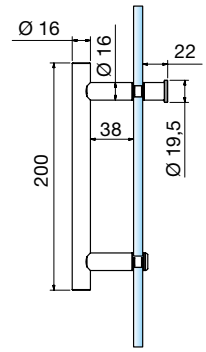

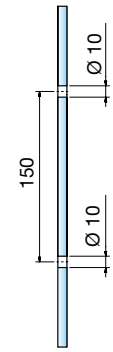

article no.	finish	glass bore	glass thickness	article description	features	pu/pieces
8065VA-200	stainless steel	Ø 10 mm	6-10 mm	door handle single sided, with handle piece	length 200 mm, raised head	1/1
8065VA1-200	stainless steel polished	Ø 10 mm	6-10 mm	door handle single sided, with handle piece	length 200 mm, raised head	1/1



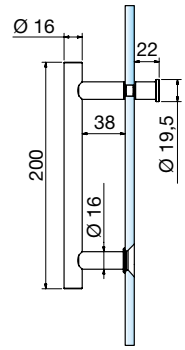

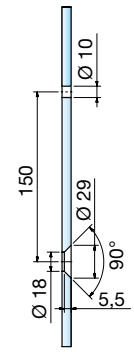

article no.	finish	glass bore	glass thickness	article description	features	pu/pieces
8066VA-200	stainless steel	please see details	8-10 mm	door handle single sided, with handle piece	length 200 mm, flush	1/1
8066VA1-200	stainless steel polished	please see details	8-10 mm	door handle single sided, with handle piece	length 200 mm, flush	1/1



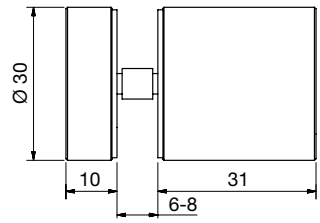

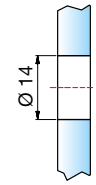

article no.	finish	glass bore	glass thickness	article description	pu/pieces
8502VA	stainless steel	Ø 14 mm	6-8 mm	glass door knob single sided	1/1



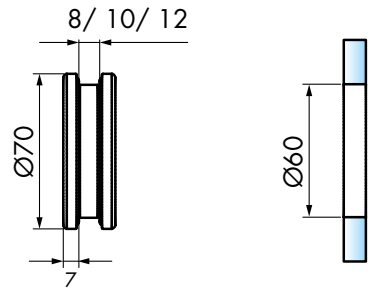

article no.	finish	glass thickness	article description	features	pu/pieces
32028VA-8	stainless steel	8 mm	recess knob, open, threaded	Ø 70 mm, raised, 7 mm	1/1
32028VA-10		10 mm			
32028VA-12		12 mm			



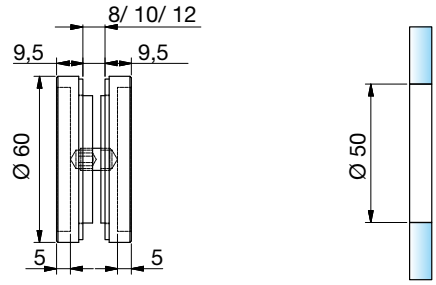

article no.	finish	glass thickness	article description	features	pu/pieces
8514MS7	gloss chrome	8/10/12 mm	recess knob, closed, threaded	Ø 60 mm, raised, 9,5 mm	1/1
8514VA	stainless steel				



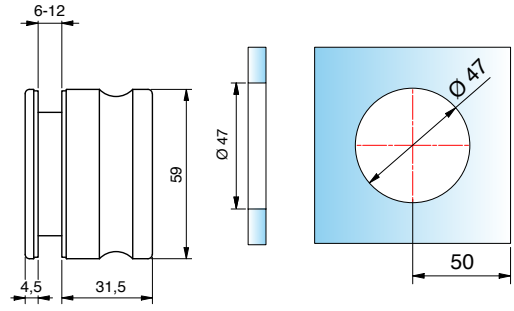



article no.	finish	glass thickness	article description	pu/pieces
8822VA-MGE	stainless steel	6-12 mm	knob double-sided, threaded	1/1



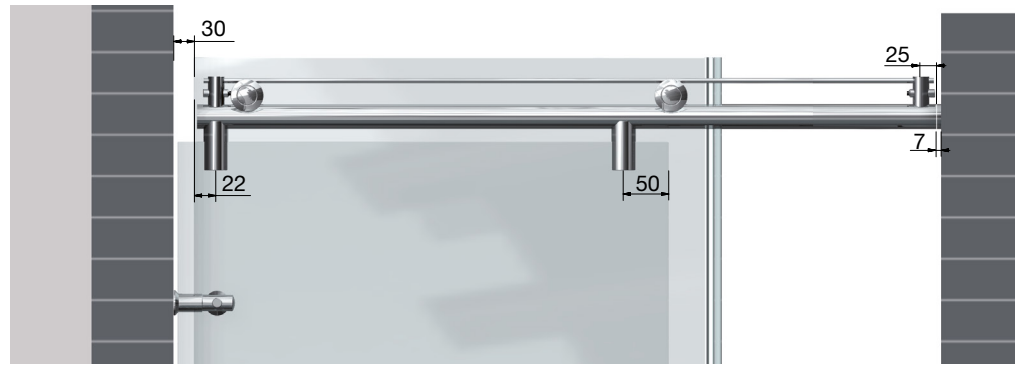

sample niche shower with single guiding rail:
for niche widths of up to 1200mm
You can use our shower 8563VA-V, 8564VA-V and 8565VA-V for niche widths of up to 1200-2000mm.
We recommend to use our shower 8557VA-V, 8558VA-V and 8559VA-V with double rail.

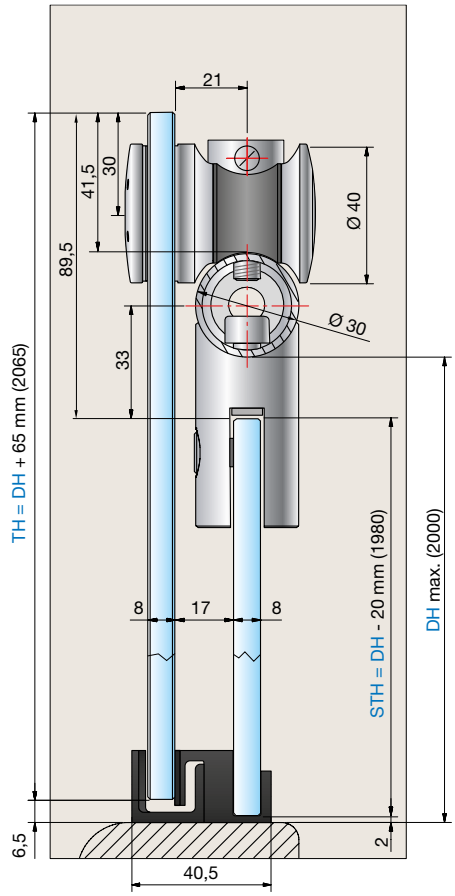

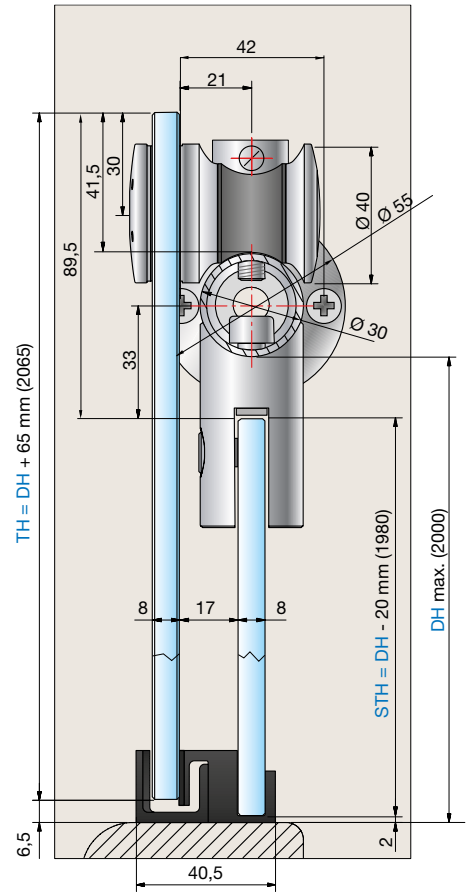

STH = height of side panel

TH = height of the door

DH = height of shower





sample niche shower with double guiding rail:
shower cabinet solutions are alternatively available with wall stud (8517VA) or wall connector plate (31177- VA). (Standard: wall stud 8517VA)
For niche sizes between 1200mm and 2000mm we recommend to use our systems 8557VA-V, 8558VA-V and 8559VA-V with double rail.

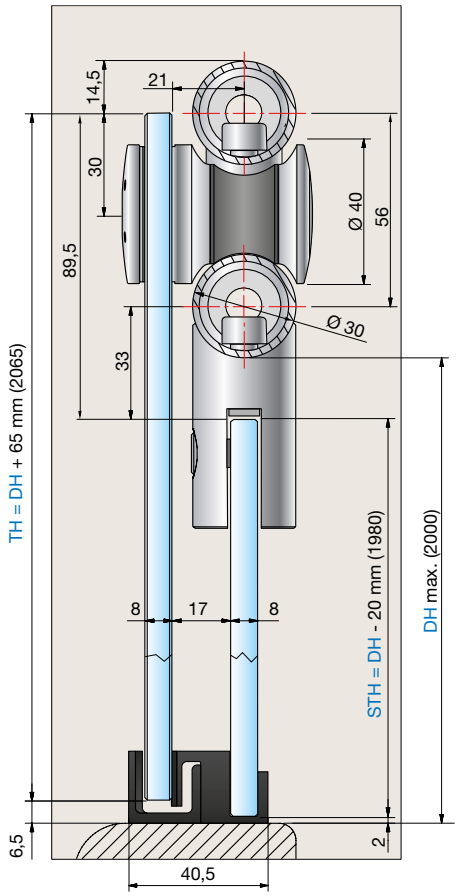

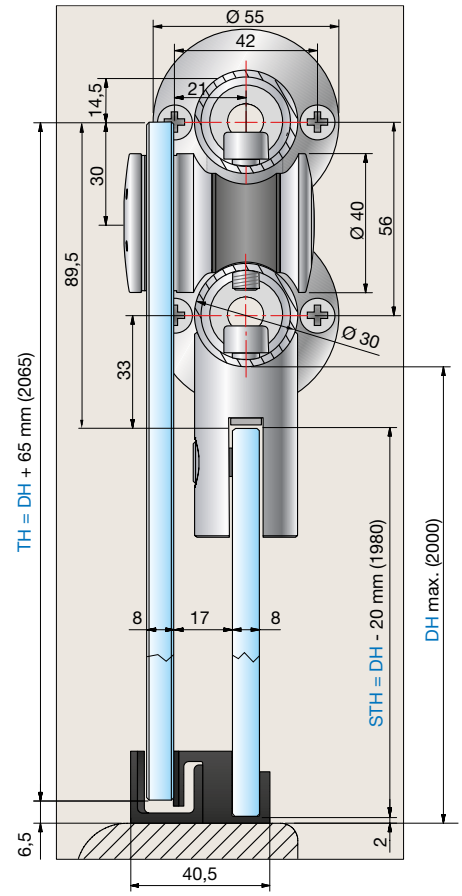

STH = height of side panel

TH = height of the door

DH = height of shower



partition walls

products in overview

various solutions for different requirements

With our wide range of products, large room situations without or only partially with additional stabilization bars can be realized.

- large variety of products
- especially suitable for individual solutions
- maximum design freedom
- combination with shower door hinges, angle brackets and profiles possible
- various solutions - quickly implemented
- easy mounting





WALK-IN with system profile
from page 284



WALK-IN with hardware
you can find a variety of angle brackets in the respective shower fixture series.



WALK-IN with hardware and floor to ceiling spanner
from page 290



WALK-IN with clamps and U-profiles
from page 292

wall profiles in overview

various solutions for diverse requirements

Each of our wall profiles is designed for different requirements.
We will be glad to advise you!



wall connection profile 8830 in combination with the 8888 system profile

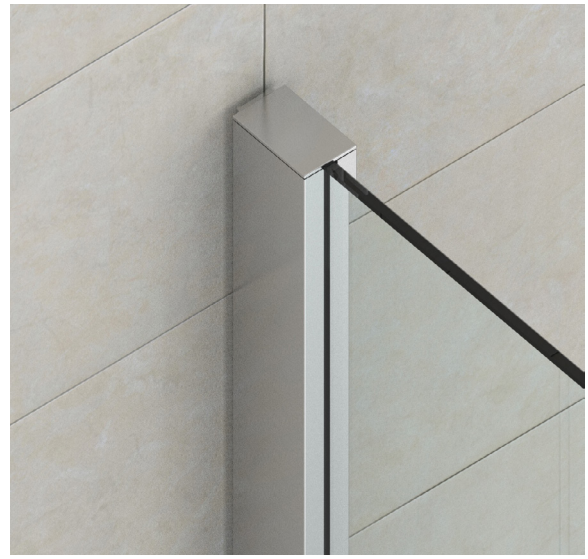

clamping profile 8884 for uneven walls and stable support



different damp room suitable U-profiles in different sizes.

type WALK-IN with system profile - ceiling mounted



900 | 901 | 902



type WALK-IN with system profile - wall mounted



903 | 904





type WALK-IN with hardware and system profile



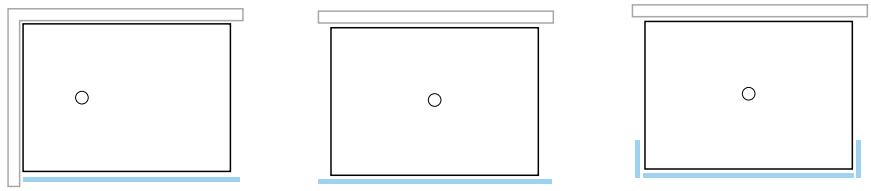

PONTERE	800	801	802
PAVONE	800	801	802
FLAMEA^{+}	800	801	802
FLAMEA	800	801	802
FARDELLO	800	801	802
FLINTER	800	801	802
NIVELLO^{+}	800	801	802
NIVELLO	800	801	802
FLUTURE	800	801	802
TURA	800	801	802
FARFALLA	800	801	802
PILLANGO	800	801	802
PAPILLON	800	801	802



Depending on the application example, the quantity and arrangement of the stabilization bars and angles can vary. Please ask our technical service.

type WALK-IN with hardware







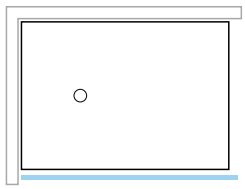
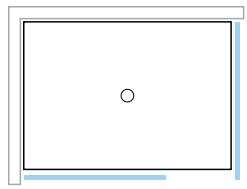
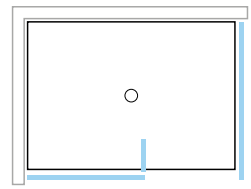
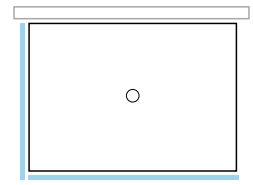
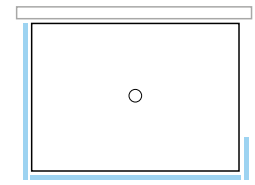

	700	701	702	703	704
	700	701	702	703	704
	700	701	702	703	704
	700	701	702	703	704
	700	701	702	703	704
	700	701	702	703	704
	700	701	702	703	704
	700	701	702	703	704
	700	701	702	703	704
	700	701	702	703	704
	700	701	702	703	704
	700	701	702	703	704
	700	701	702	703	704
	700	701	702	703	704

Depending on the application example, the quantity and arrangement of the stabilization bars and angles can vary. Please ask our technical service.



WALK-IN system profile

different solutions - quickly installed

- length: 2800 mm
- tube can be shortened in length
- tube 32 x 32 mm
- especially suitable for individual solutions
- maximum design freedom
- easy assembly
- compensation of inclined walls up to approx. 6 mm
- installation with LEDs possible
- concealed screw connection
- no additional stabilization bars required







- due to the divided rubber profile, the glass pane can be inserted without any problems.



screw fastened version



glued version



- we offer various possibilities for connection to the floor. Both variants must be sealed with silicone.

version with one glass panel - mounted to the ceiling

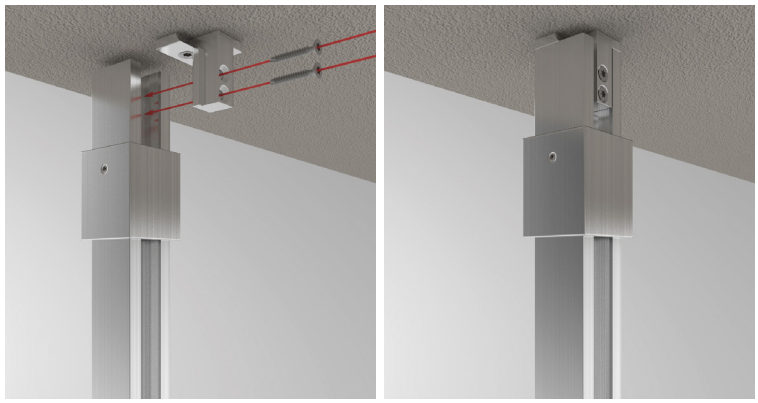



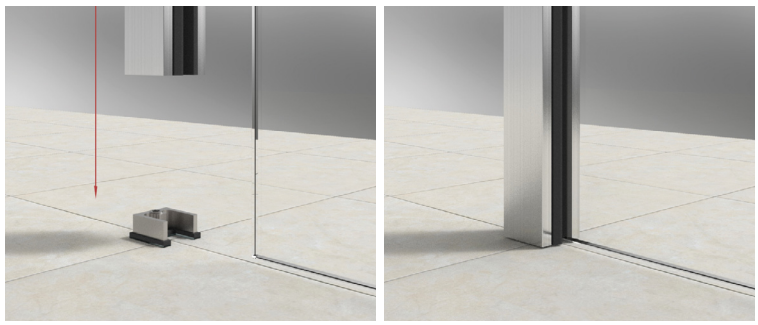

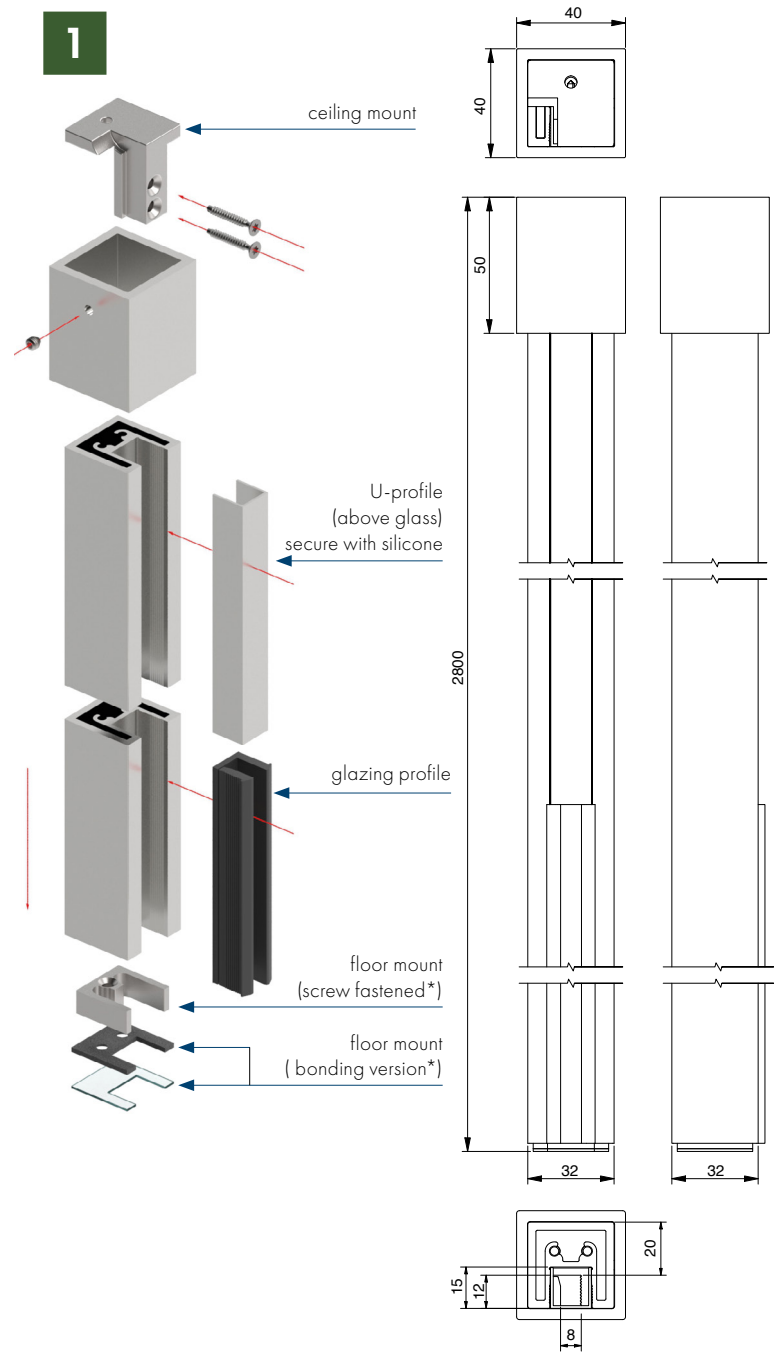

* In order to prevent the water barrier in the bathroom from being damaged by subsequent drilling of the lower mounting plate, the tiler should install the mounting adapter into the floor structure beforehand and carry out the correct moisture barrier according to the exposure class in accordance with the recognized guidelines.

version with two panels - mounted to the ceiling

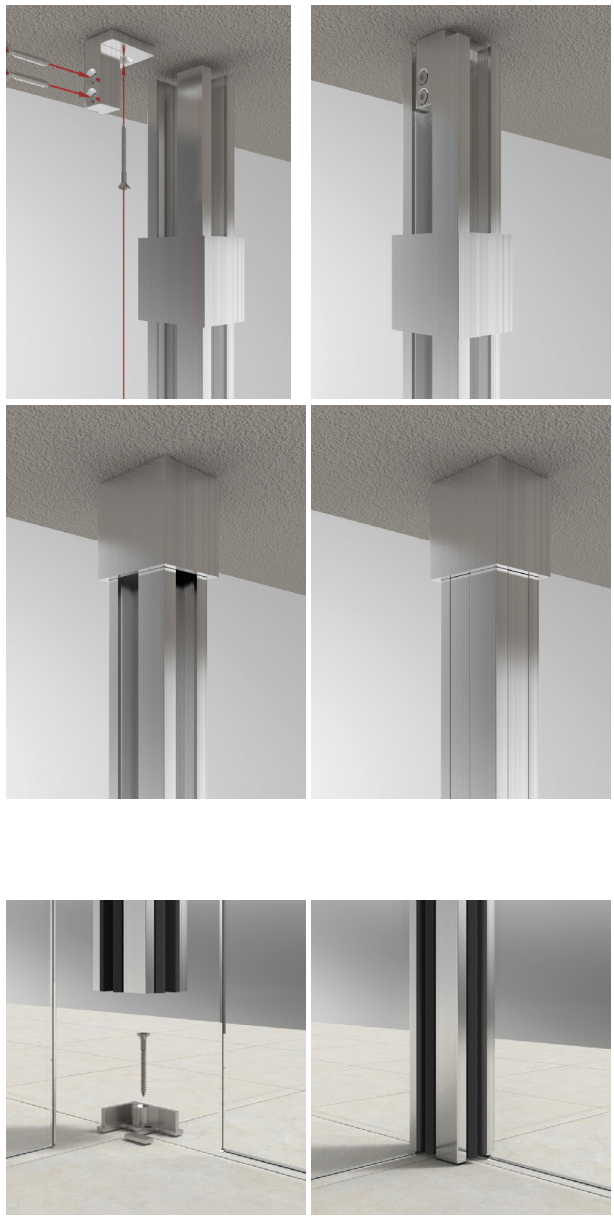

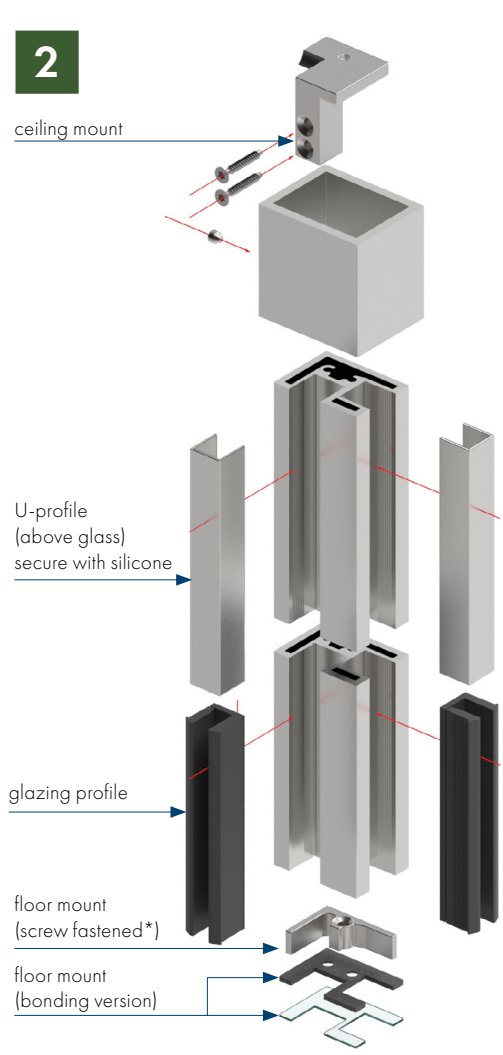

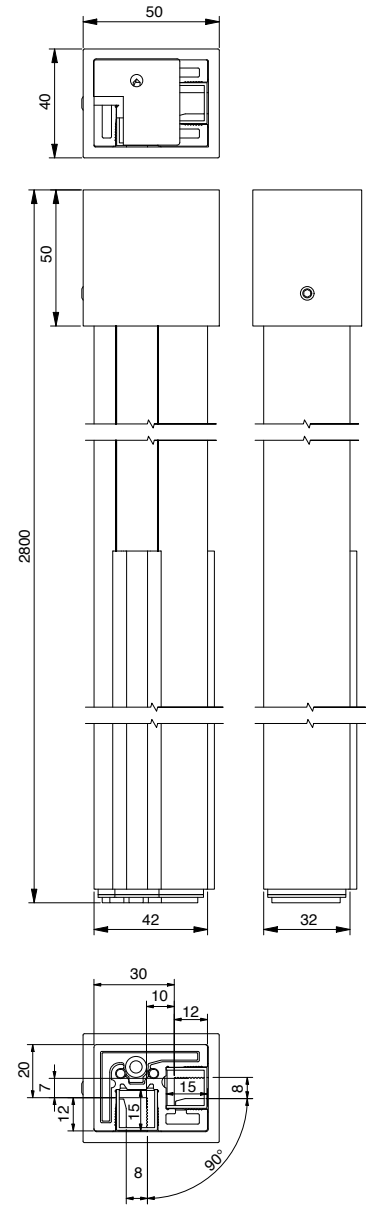

	article no.	finish	glass thickness	article description	length	pu/pieces
1	8888E6EV5-BD 8888E3/50-BD 8888E123-BD 8888E6C35-BD	aluminium gloss anodized gloss chrome stainless steel optic black anodized	8 mm with glazing profiles or silicone seam 10 mm with silicone seam 12 mm with silicone seam	partition wall support floor-ceiling 1 slot 15 x 15 mm U-profile as filler above the glass edge towards the ceiling	2800 mm	1/1
2	8888E6EV5-BD2N 8888E3/50-BD2N 8888E123-BD2N 8888E6C35-BD2N	aluminium gloss anodized gloss chrome stainless steel optic black anodized	8 mm with glazing profiles or silicone seam 10 mm with silicone seam 12 mm with silicone seam	partition wall support floor-ceiling 90° 2 slots 15 x 15 mm U-profile as filler above the glass edge towards the ceiling	2800 mm	1/1

version with one glass panel - mounted on the wall

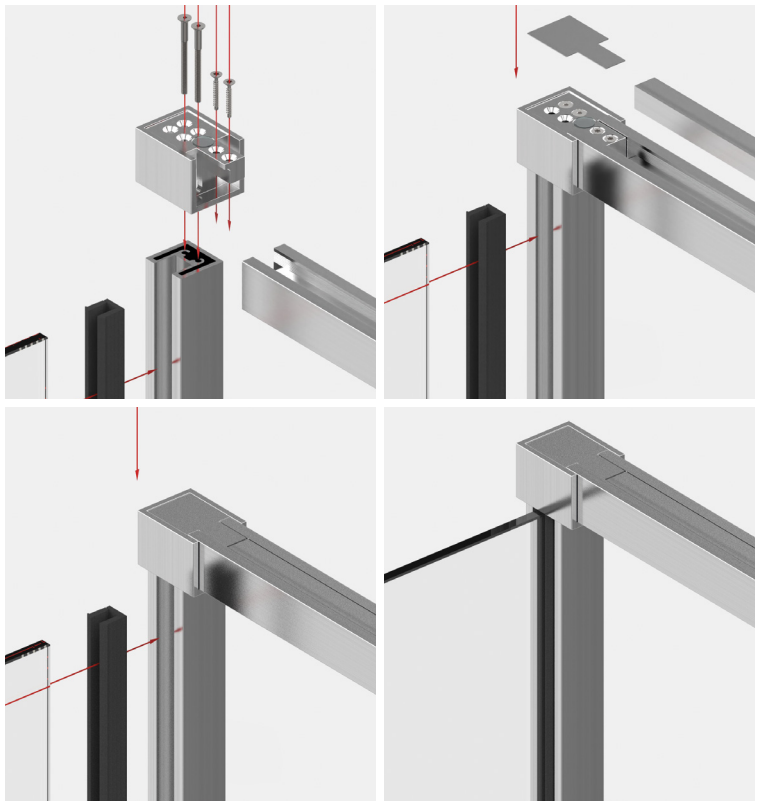

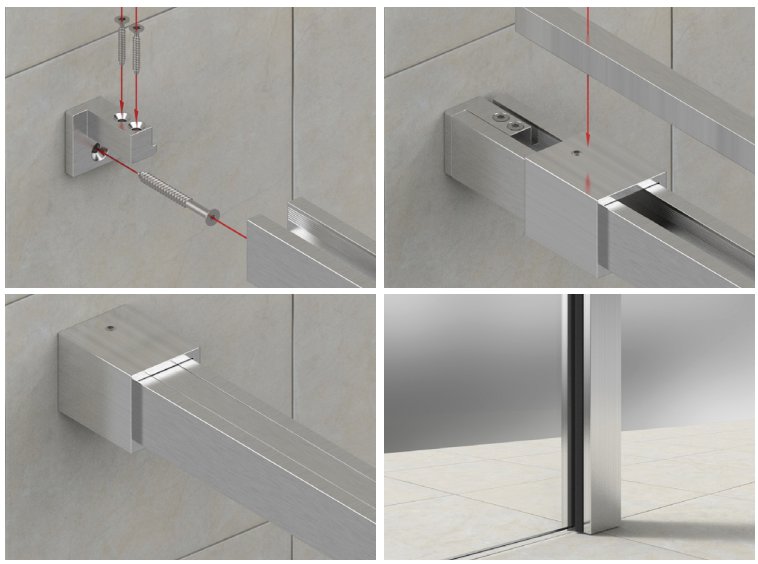

3

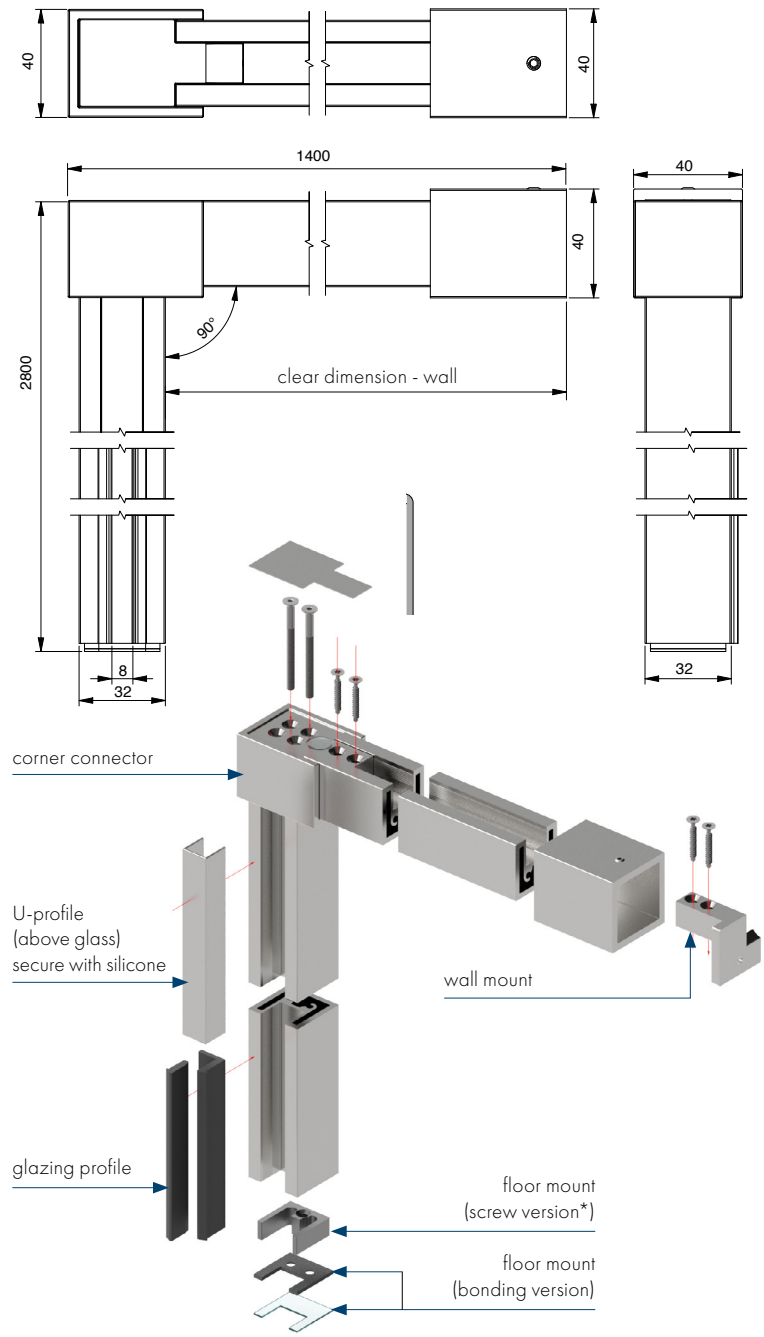

* To ensure that the water barrier in the bathroom is not violated by subsequent drilling of the lower fastening plate, the tiler should work the fastening adapter into the floor structure beforehand and apply the correct damp-proofing in accordance with the recognized guidelines for the respective stress class.



4

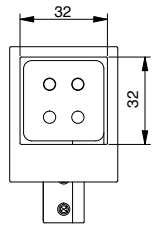

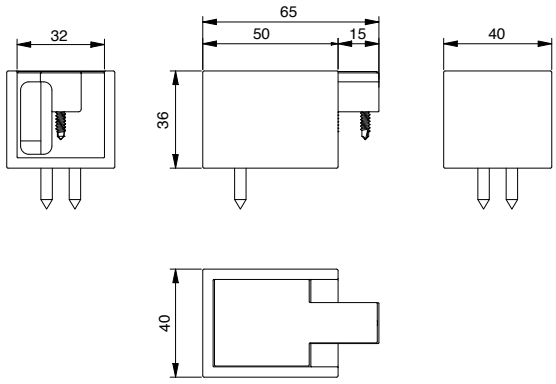

wall variation

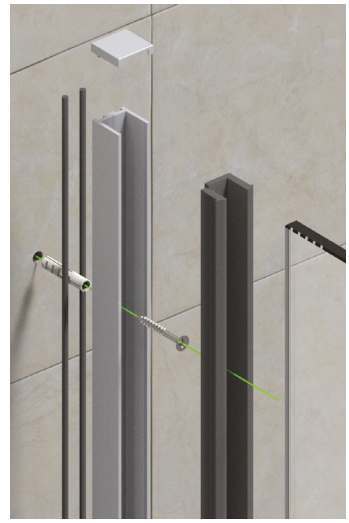



5

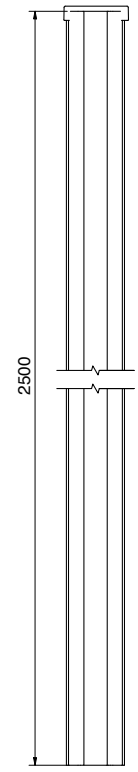

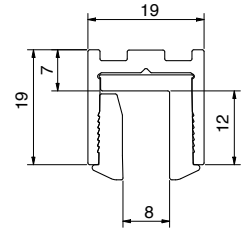

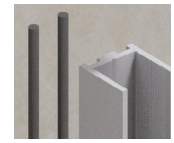

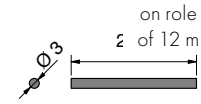



8830-2Butyl-12M - optionally available
butyl cord Ø 3 mm, length 12 m,
as a seal to the wall without subsequent silicone seam

	article no.	finish	glass thickness	article description	length	pu/pieces
3	8888E6EV5-BW 8888E3/50-BW 8888E1/23-BW 8888E6C35-BW	aluminium gloss anodized gloss chrome stainless steel optic black anodized	8 mm with glazing profiles or silicone seam 10 mm with silicone seam 12 mm with silicone seam	partition wall support floor-wall 1 slot 15 x 15 mm U-profile as filler above the glass edge towards the wall	2800 mm + 1400 mm	1/1
4	8888E3/50-EV 8888E1/23-EV 8888E6C35-EV	gloss chrome stainless steel optic black anodized	8 mm with glazing profiles or silicone seam 10 mm with silicone seam 12 mm with silicone seam	corner connector partition wall support can be used left or right only in combination with 8888E0-BW partition wall support	-	1/1
5	8830E6EV5-2500 8830E3/50-2500 8830E123-2500 8830E6C35-2500	aluminium gloss anodized gloss chrome stainless steel optic black anodized	8 mm with glazing profiles or silicone seam 10 mm with silicone seam 12 mm with silicone seam	U-Profil 1 slot 15 x 15 mm maximum height 2500 mm can be shortened as desired	2500 mm	1/1



floor to ceiling expansion tube

The ceiling to floor expansion tube is suitable for fastening door panels, angle brackets and u-profiles.

- surface finish: gloss anodized (E6/EV5)
- length: 3000mm
- tube can be cut to desired length
- tube 69x29mm

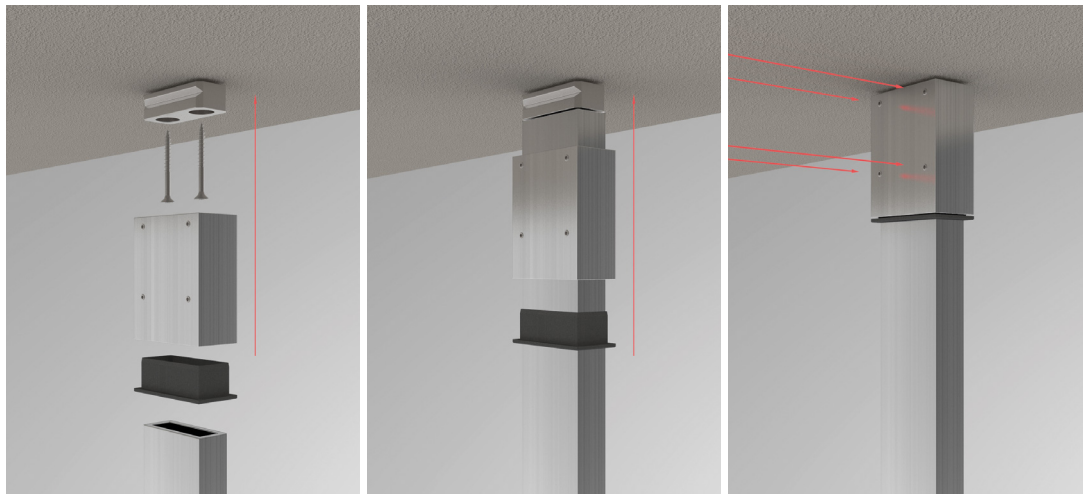

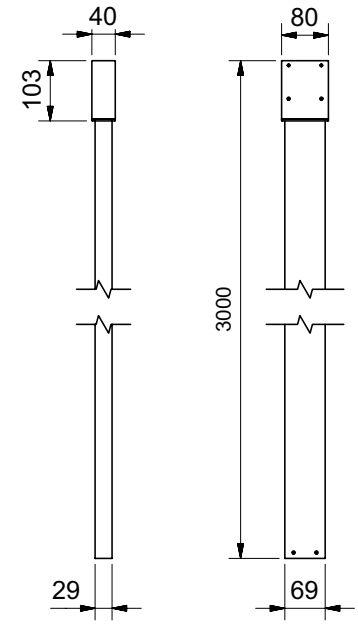

article no.	finishes	article description	features	pu/pieces
8885E6EV5-3000	gloss anodized	ceiling to floor expansion tube	material: aluminum, length: 3000 mm, tube 69x29 mm, material thickness: 5 mm tube can be cut to desired length	1/1

Note: when mounting door panels to partition wall posts, please refer to our application technology for possible door sizes. We're here to help!

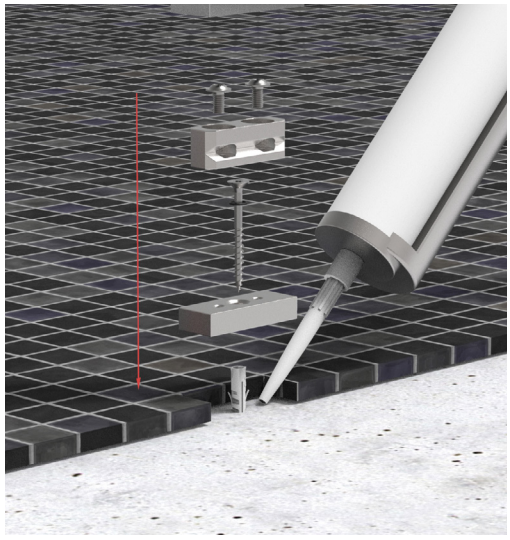

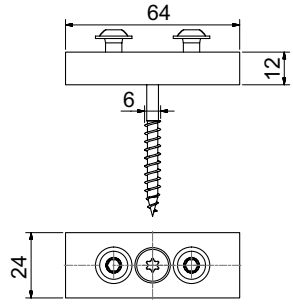

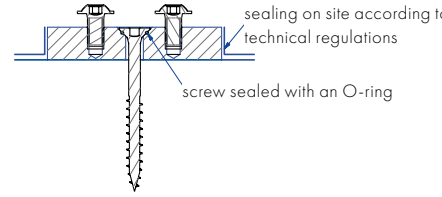

article no.	finishes	article description	features	pu/pieces
8887E6EV1-12	aluminum optic	adapter plate	to ensure that the water barrier in the bath is not damaged by the subsequent drilling of the lower mounting plate, the tiler should first install the fastening adapter on to the floor structure and carry out the correct moisture seal in accordance with the recognized guidelines.	1/1



single clamping jaws moveable along the entire profile length
2010 mm = 5 clamping jaws, 2500 mm = 6 clamping jaws

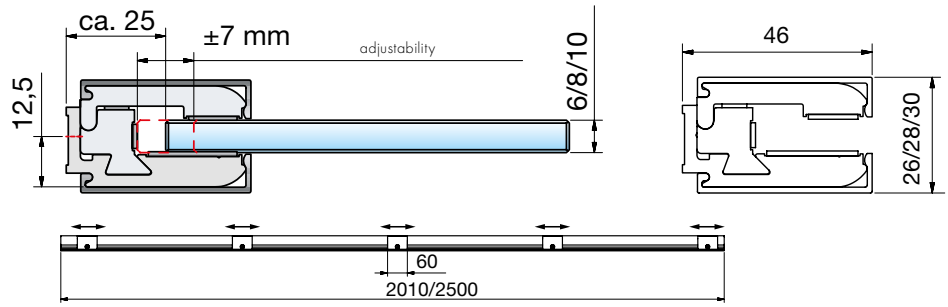

endcaps are not included in set!

article no.	finish	glass thickness	article description	pu/pieces
8884E1/23-2010-8	aluminium ground anodised nickel silver	6/8/10 mm	clamp profile	1/1
8884E1/23-2500-8	(stainless steel optic)			
8884E6EV1-2010-8	aluminium special etched anodised natural color			
8884E6EV1-2500-8				
8884E6EV1-5000-8				
8884E6EV5-2010-8	aluminium special etched anodised gloss chrome			
8884E6EV5-2500-8				

Please order the following sets for free:
for 6 mm glass thickness
8884-10ZN0-5-6 for 2010 mm/ 8884-10ZN0-6-6 for 2500mm/ 8884-10ZN0-6-6 for 5000 mm - 2x per profile
for 10 mm glass thickness
8884-10ZN0-5-10 for 2010 mm/ 8884-10ZN0-6-10 for 2500 mm/ 8884-10ZN0-6-10 for 5000 mm - 2x per profile

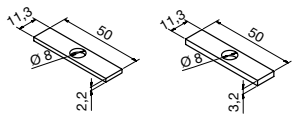

article no.	material	article description
8885HZ	Hartzell	intermediate shims for 8884

intermediate shims for 8884 to remove any unevenness in the wall, 5 pieces per thickness are supplied with the set. unevenness can be removed from 2 mm in 1-mm stages through combining and/or doubling.

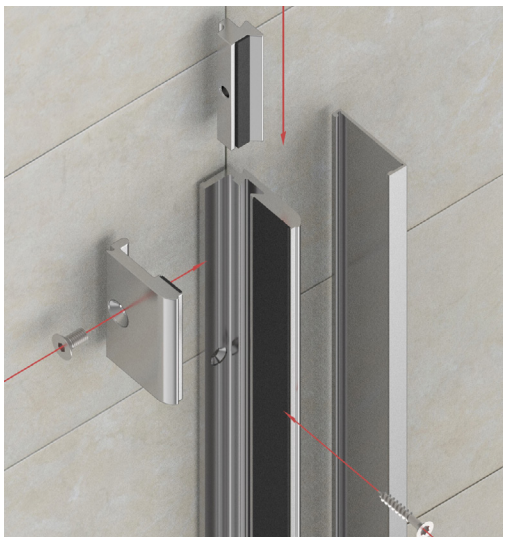









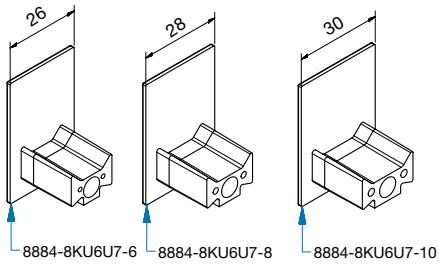

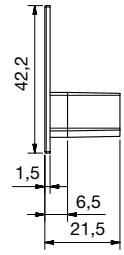

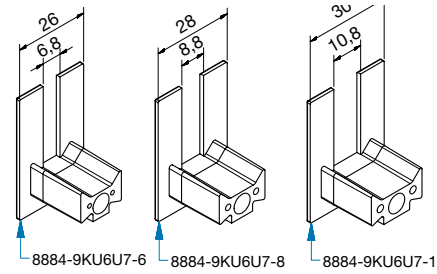

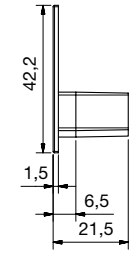

article no.	finishes	glass thickness	article description	pu/pieces
8884-8KU6U7-6	*	6 mm	end cap for clamping profile 8884, closed	1/1
8884-8KU22-6	**			
8884-8KU6U7-8	*	8 mm		
8884-8KU22-8	**			
8884-8KU6U7-10	*	10 mm		
8884-8KU22-10	**			

article no.	finishes	glass thickness	article description	pu/pieces
8884-9KU6U7-6	*	6 mm	end cap for clamping profile 8884, notched	1/1
8884-9KU22-6	**			
8884-9KU6U7-8	*	8 mm		
8884-9KU22-8	**			
8884-9KU6U7-10	*	10 mm		
8884-9KU22-10	**			

* KU6U7 is for E6/EV1 and E6/EV5
* * KU22 is for E1/23



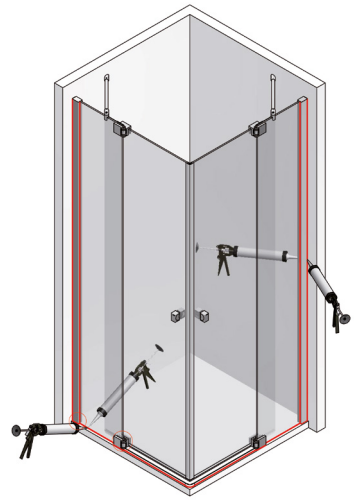

Note:
The clamp profile as well as the glass of the shower must be silicone sealed.

suitable for wet areas

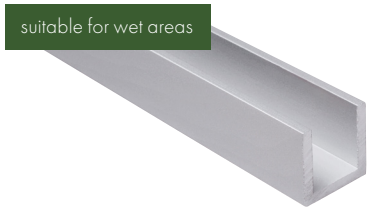

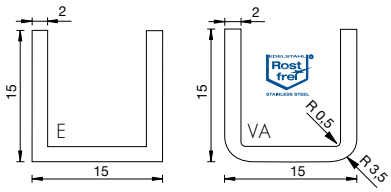

article no.	finish	plate thickness	article description	pu/pieces
5015VA1-2500	stainless steel polished	≤ 10 mm	u-profil, 15x15x2500x2 mm	1/1
5015VA2-2500	stainless steel			
5015E6EV5-2.5M	aluminium polished and anodized			
5015E6C35-2.5M	aluminium black anodized			
5015VA1-5M	stainless steel polished	≤ 10 mm	u-profil, 15x15x5000x2 mm	
5015VA2-5M	stainless steel			
5015E6EV1-5M	aluminium natural-colored anodized			
5015E1/23-5M	aluminium anodized stainless steel optic			
5015E3/50-5M	aluminium gloss chrome*			
5015E0/14-5M	aluminium powder-coated RAL9016			
5015E6C35-5M	aluminium black anodized			

suitable for wet areas

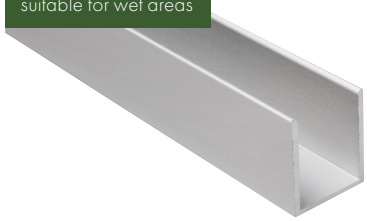

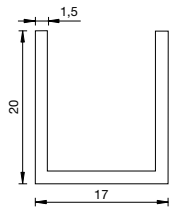

article no.	finish	plate thickness	article description	pu/pieces
5017E6EV1-5M	aluminium natural-colored anodizedt	≤ 14 mm	u-profil, 20x17x5000x1,5 mm	1/1
5017E6EV5-5M	aluminium polished and anodized			
5017E3/50-5M	aluminium gloss chrome*			
5017E0/14-5M	aluminium powder-coated RAL9016			
5017E1/23-5M	aluminium anodized stainless steel optic			

suitable for wet areas



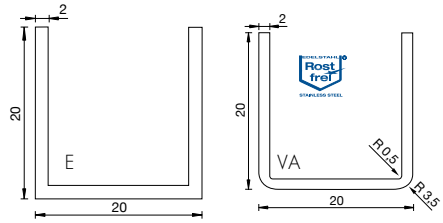

article no.	finish	plate thickness	article description	pu/pieces
5020VA1-2500	stainless steel polished	≤ 16 mm	U-Profil, 20x20x2500x2 mm	1/1
5020VA2-2500	stainless steel			
5020VA1-5M	stainless steel polished	≤ 16 mm	U-Profil, 20x20x5000x2 mm	1/1
5020VA2-5M	stainless steel			
5020E6EV1-5M	aluminium natural-colored anodized			
5020E1/23-5M	aluminium anodized stainless steel optic			
5020E3/50-5M	aluminium gloss chrome*			
5020E0/14-5M	aluminium powder-coated RAL9016			
5020E6C35-5M	aluminium black anodized			

*Attention: For profiles with the surface E3/50 the cut edges must be sealed very well in wet areas!
Contacting (anodizing & coating): Due to the process technology, the profile ends (20-50mm) may have contact marks due to the necessary contacting.
When ordering fixed lengths (5m), this must be taken into account.

suitable for wet areas

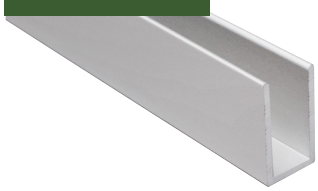

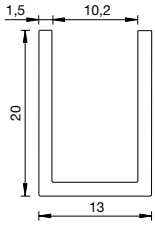

article no.	finish	plate thickness	article description	pu/pieces
8841E6EV5-2010	aluminium polished and anodized	6-10 mm	u-profile 20x13x2010x1,5 mm	1/1
8841E6EV5-2500	aluminium polished and anodized		u-profile 20x13x2500x1,5 mm	
8841E6EV1-5M	aluminium natural-colored anodized		u-profile 20x13x5000x1,5 mm	
8841E123-5M	aluminium anodized stainless steel optic			
8841E3/50-5M	aluminium gloss chrome*			
8841E6C35-5M	aluminium black anodized			
8841E3EV3-5M	aluminium gold anodized			

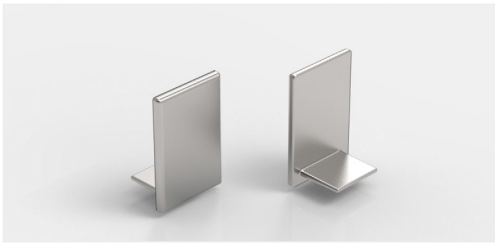

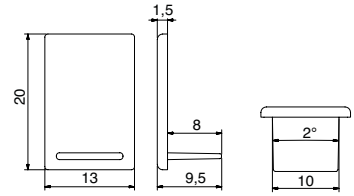

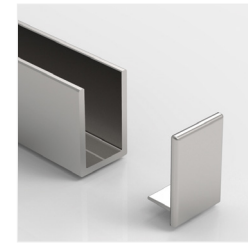

article no.	finish	article description	pu/pieces
8841-2KU6U7	natural-colored anodized (gloss chrome)	end cap for profile 8841, closed	1/1

*Attention: For profiles with the surface E3/50 the cut edges must be sealed very well in wet areas!
Contacting (anodizing & coating): Due to the process technology, the profile ends (20-50mm) may have contact marks due to the necessary contacting.
When ordering fixed lengths (5m), this must be taken into account.

accessories

article no.	article description	pu/pieces
7269KL-9-5M	double-sided adhesive tape, transparent, thickness 2 mm	1/1
7269KL-11-5M		
7269KL-15-5M		
7269KL-19-5M		
7269KL-23-5M		

Important note:
Only as sealing or assembly aid. Despite the high adhesive strength, these do not replace mechanical fastening (screws).



accessories

accessories

MADE IN GERMANY

Of course, Pauli is also offering the suitable accessories for all of our shower hinges and -systems. Knobs, towel- and stabilizer-bars - all are aligned and compatible to each other. Everything is well matched and can be chosen freely. Additionally, we offer the right sealing profiles and splash guards for every situation. any more questions? Contact us – we will be glad to assist you!



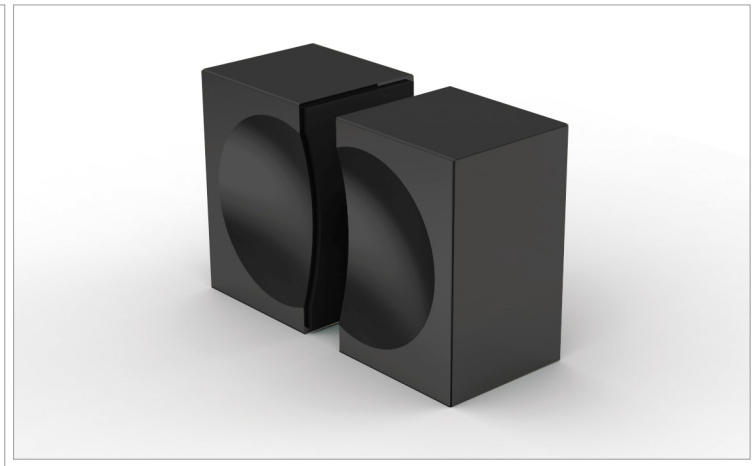

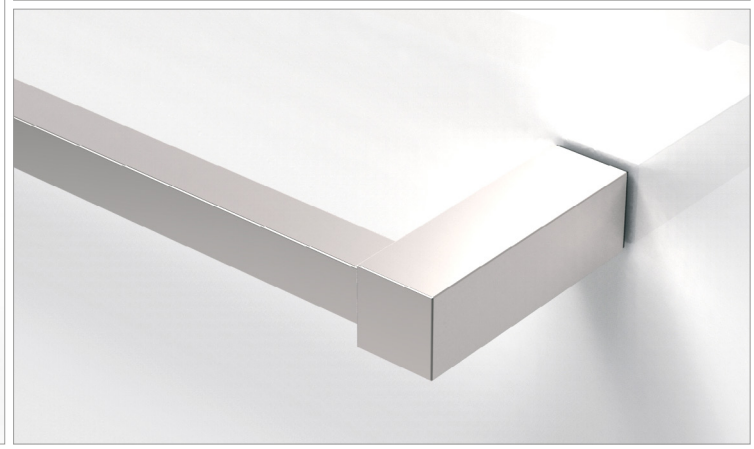

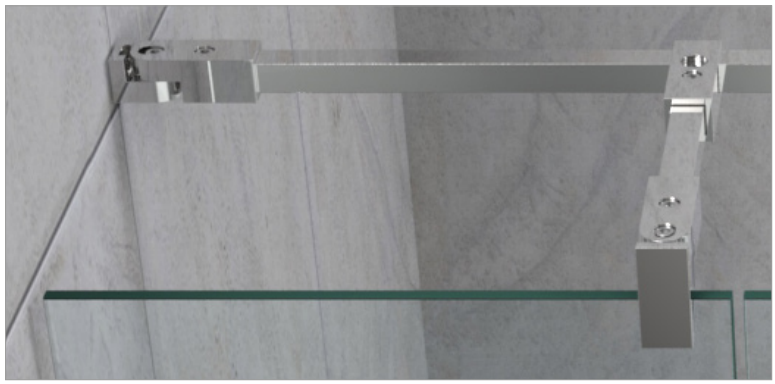

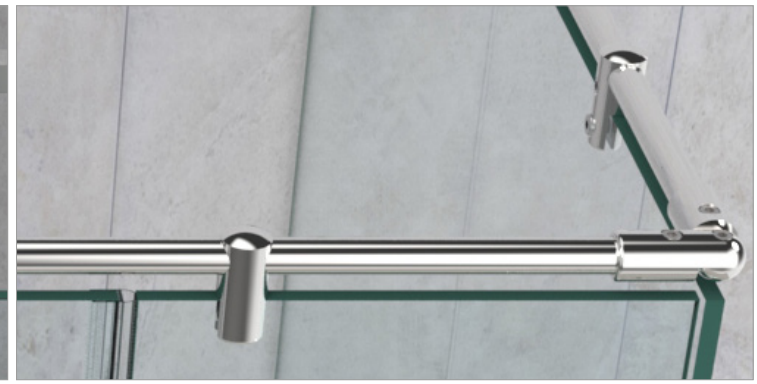



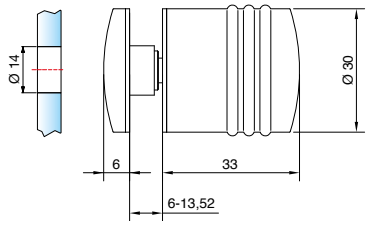

article no.	finish	glass thickn.	article description	pu/pieces
8299ZN5	gloss chrome	6-13,52 mm	glass door knob	1/2
8299ZN1	matt chrome		one sided	
8299ZNPVD20	gold optic			
8299ZNPVD22	stainless steel optic			
8299ZN136	deep black matt			



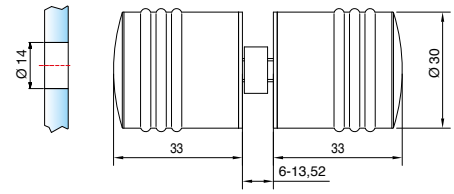

article no.	finish	glass thickn.	article description	pu/pieces
8298ZN5	gloss chrome	6-13,52 mm	glass door knob	1/2
8298ZN1	matt chrome		double sided	
8298ZNPVD20	gold optic			
8298ZNPVD22	stainless steel optic			
8298ZNPVD35	black matt			
8298ZN136	deep black matt			

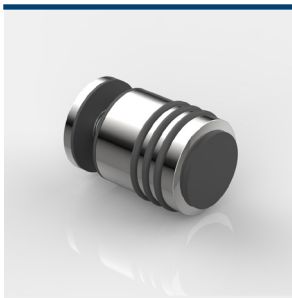

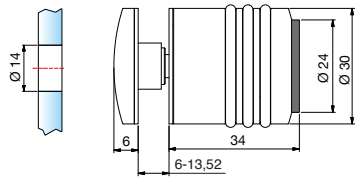

article no.	finish	glass thickn.	article description	pu/pieces
8293ZN5	gloss chrome	6-13,52 mm	glass door knob	1/2
8293ZN1	matt chrome		one sided, with	
8293ZNPVD22	stainless steel optic		rubber stop	
8293ZN135	deep black matt			



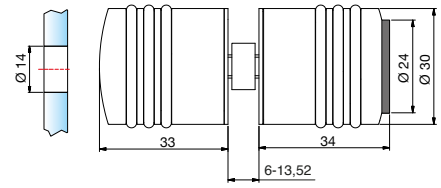

article no.	finish	glass thickn.	article description	pu/pieces
8294ZN5	gloss chrome	6-12 mm	glass door knob	1/1
8294ZN1	matt chrome		double sided with	
8294ZNPVD22	stainless steel optic		rubber stop	
8294ZN135	deep black matt			

The O-rings can be removed for cleaning purposes. Special "fixed O-rings" for the object area can be ordered separately using article number 8298-4KU.



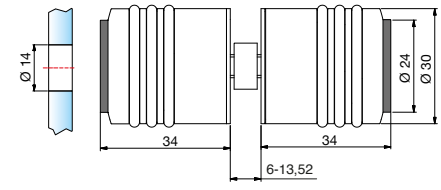

article no.	finish	glass thickn.	article description	pu/pcs.
8694ZN5	gloss chrome	6-13,52 mm	glass door knob	1/1
8694ZN1	matt chrome		double sided with	
8694ZNPVD22	stainless steel optic		double sided rubber	
8694ZN135	deep black matt		stop	



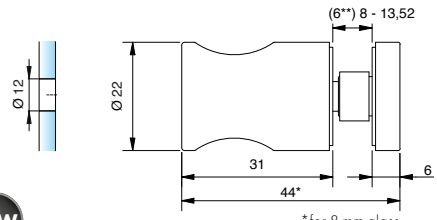

article no.	finish	glass thickn.	article description	pu/pieces
8698ZN5	gloss chrome	6-13,52 mm	glass door knob	1/1
8698ZN1	matt chrome		one sided	
8698ZNPVD20	gold optic			
8698ZNPVD22	stainless steel optic			
8698ZN135	deep black matt			

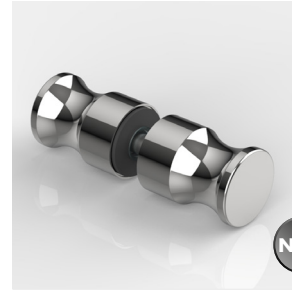

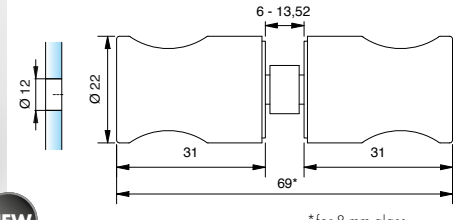

article no.	finish	glass thickn.	article description	pu/pieces
8697ZN5	gloss chrome	6-13,52 mm	glass door knob	1/1
8697ZN1	matt chrome		double sided	
8697ZNPVD20	gold optic			
8697ZNPVD22	stainless steel optic			
8697ZN135	deep black matt			

**article no. 8686-7HZ replaces article no. 8686-5HZ when using FTG-6 . 8686-7HZ must be ordered separately for ESG-6.



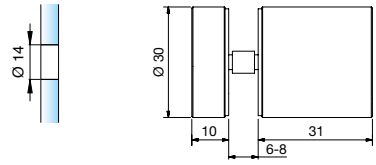

article no.	finish	glass thickn.	article description	pu/pieces
8502VA	stainless steel	6-8 mm	glass door knob	1/1

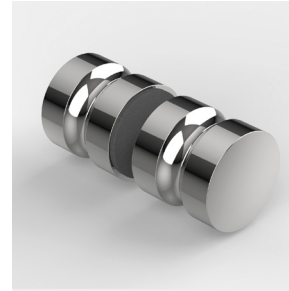

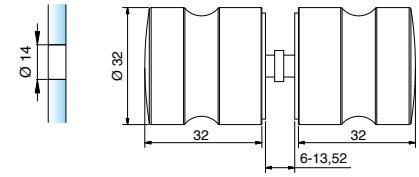

article no.	finish	glass thickn.	article description	pu/pieces
8288ZN5	gloss chrome	6-13,52 mm	glass door knob	1/1
8288ZN1	matt chrome		double sided	
8288ZNPVD22	stainless steel optic			
8288ZN135	deep black matt			
8288ZN134	white matt			



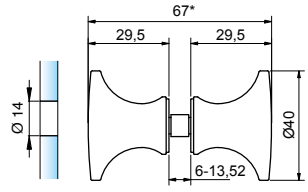

article no.	finish	glass thickn.	article description	pu/pieces
8236ZN5	gloss chrome	6-13,52 mm	glass door knob	1/2
8236ZN1	matt chrome		double sided	
8236ZNPVD22	stainless steel optic			
8236ZNPVD35	black matt			



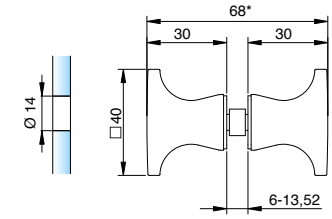

article no.	finish	glass thickn.	article description	pu/pieces
8237ZN5	gloss chrome	6-13,52 mm	glass door knob	1/2
8237ZN1	matt chrome		double sided	
8237ZNPVD22	stainless steel optic			
8237ZNPVD35	black matt			



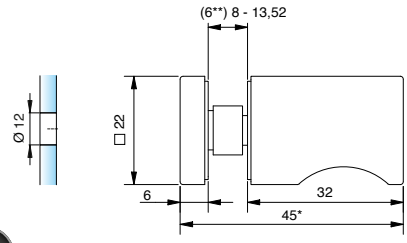

*for 8 mm glass

article no.	finish	glass thickn.	article description	pu/pieces
8692ZN5	gloss chrome	6-13,52 mm	glass door knob	1/1
8692ZN1	matt chrome		one sided	
8692ZNPVD20	gold optic			
8692ZNPVD22	stainless steel optic			
8692ZN135	deep black matt			



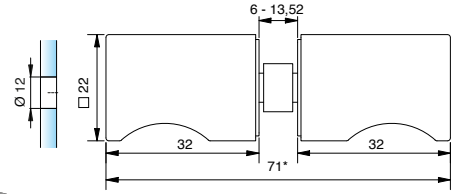

*for 8 mm glass

article no.	finish	glass thickn.	article description	pu/pieces
8691ZN5	gloss chrome	6-13,52 mm	glass door knob	1/1
8691ZN1	matt chrome		double sided	
8691ZNPVD20	gold optic			
8691ZNPVD22	stainless steel optic			
8691ZN135	deep black matt			

**article no. 8274-4HZ replaces article no. 8274-2HZ when using FTG-6. 8274-4HZ must be ordered separately for FTG-6.



8691ZN

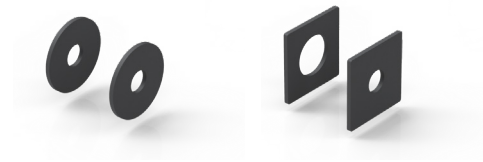

article no.	article description	pu/pieces
8686-7HZ	HZ Inlay for 6 mm glass (round)	1/1
8274-4HZ	HZ Inlay for 6 mm glass (square)	1/1



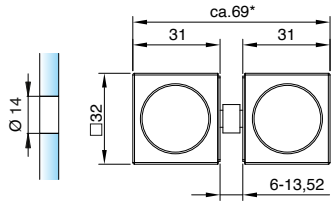

new design
handle recess improved

*for 8 mm glass

article no.	finish	glass thickn.	article description	pu/pieces
8378ZN5	gloss chrome	6-13,52 mm	glass door knob	1/2
8378ZN1	matt chrome		double sided	
8378ZNPVD22	stainless steel optic			
8378ZNPVD35	black matt			



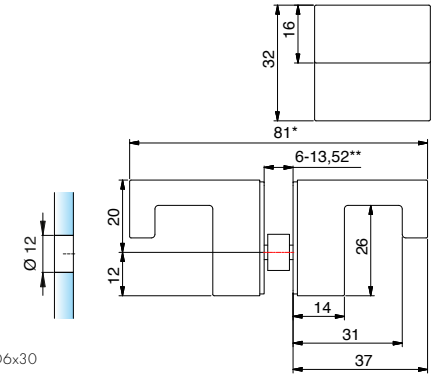

*for 8 mm glass
** for glass thickness from 10 mm, use S912A2D6x30

article no.	finish	glass thickn.	article description	pu/pieces
8252ZN5	gloss chrome	6-13,52 mm	glass door knob	1/2
8252ZN1	matt chrome		double sided	
8252ZNPVD20	gold optic			
8252ZNPVD22	stainless steel optic			
8252ZN135	deep black matt			



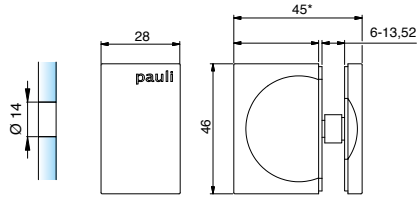

*for 8 mm glass

article no.	finish	glass thickn.	article description	pu/pieces
8275ZN5	gloss chrome	6-13,52 mm	glass door knob	1/1
8275ZN1	matt chrome		single sided	
8275ZNPVD22	stainless steel optic			
8275ZNPVD35	black matt			



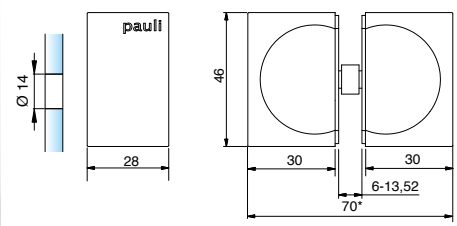

*for 8 mm glass

article no.	finish	glass thickn.	article description	pu/pieces
8278ZN5	gloss chrome	6-13,52 mm	glass door knob	1/1
8278ZN1	matt chrome		double sided	
8278ZN10	gloss nickel			
8278ZNPVD22	stainless steel optic			
8278ZNPVD35	black matt			
8278ZN5-A	gloss chrome		without logo	
8278ZNPVD20-A	gold optic			
8278ZN135-A	deep black matt			

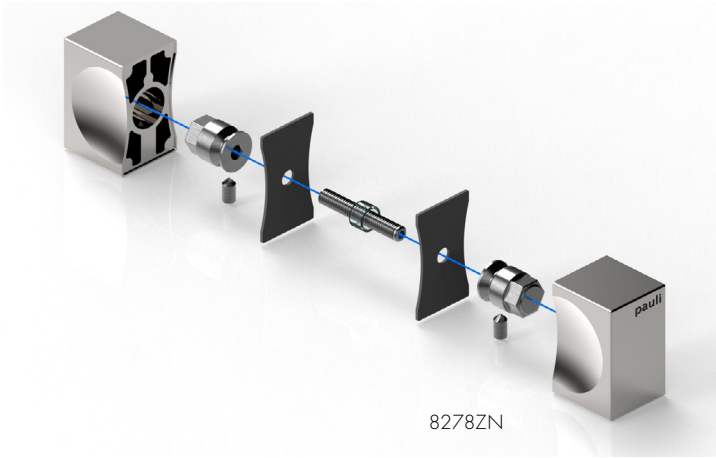

8278ZN

note:
The self-adhesive handles must not be bonded to coated glass. The surface must be cleaned and degreased before bonding. Press the handles firmly after bonding, e.g. apply pressure with a clamp.



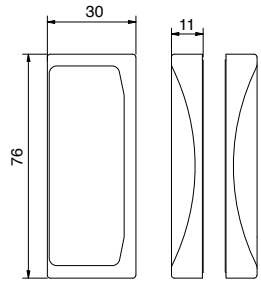

article no.	finish	glass thickn.	article description	pu/pieces
8822ZN5-MGH	gloss chrome	6-13,52 mm	glass door knob	1/1
8822ZN1-MGH	matt chrome		double sided	
8822ZNPVD20-MGH	gold optic		self-adhesive	
8822ZNPVD22-MGH	stainless steel optic			
8822ZN135-MGH	deep black matt			



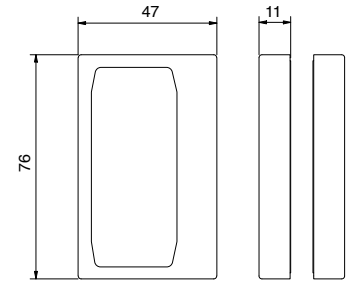

article no.	finish	glass thickn.	article description	pu/pcs.
8822ZN5-MGV	gloss chrome	6-13,52 mm	glass door knob	1/1
8822ZN1-MGV	matt chrome		double sided	
8822ZNPVD20-MGV	gold optic		self-adhesive	
8822ZNPVD22-MGV	stainless steel optic			
8822ZN135-MGV	deep black matt			



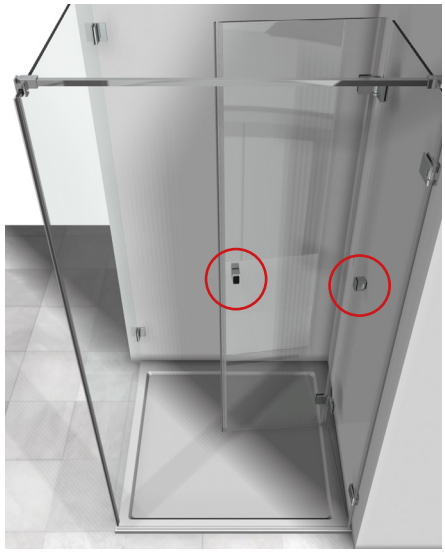

hole spacing for:



8271ZN



8273ZN

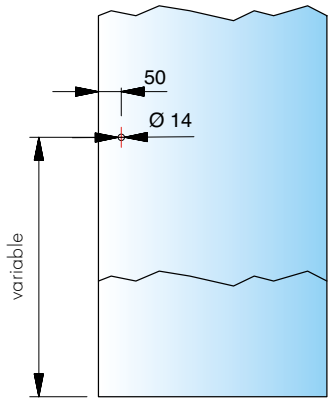



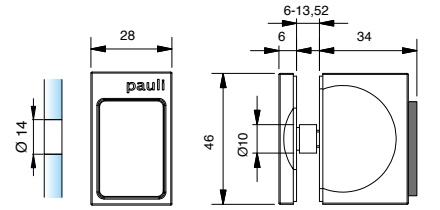

article no.	finish	glass thickn.	article description	pu/pieces
8271ZN5	gloss chrome	6-13,52 mm	glass door knob	1/2
8271ZN1	matt chrome		with rubber stop	
8271ZNPVD22	stainless steel optic		one sided	
8271ZNPVD35	black matt			



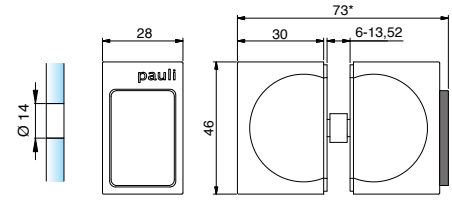

*for 8 mm glass

article no.	finish	glass thickn.	article description	pu/pieces
8273ZN5	gloss chrome	6-13,52 mm	glass door knob	1/2
8273ZN1	matt chrome		double sided with	
8273ZNPVD22	stainless steel optic		rubber stop	
8273ZNPVD35	black matt			
8273ZN135	deep black matt			
8273ZN5-A	gloss chrome		without logo	
8273ZN10-A	gloss nickel			
8273ZNPVD20-A	gold optic			



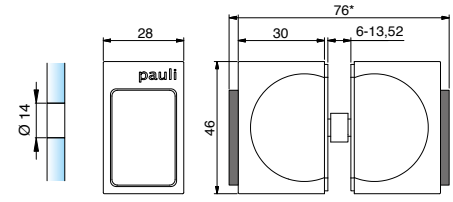

*for 8 mm glass

article no.	finish	glass thickn.	article description	pu/pieces
8263ZN5	gloss chrome	6-13,52 mm	glass door knob	1/2
8263ZN1	matt chrome		double sided with	
8263ZNPVD22	stainless steel optic		rubber stop	
8263ZN135	deep black matt		double sided	









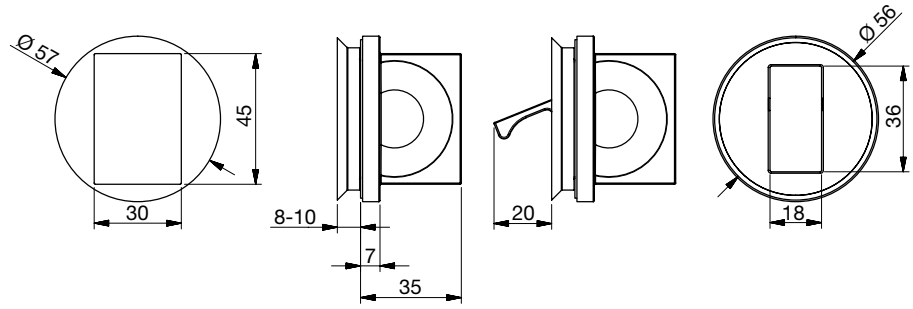

article no.	finish	glass thickn.	article description	pu/pieces
8379ZN5	gloss chrome	6-13,52 mm	glass door knob	1/2
8379ZN1	matt chrome		double sided	
8379ZNPVD22	stainless steel optic		flush with pull flap	
8379ZNPVD35	black matt			

note:
The self-adhesive handles may not be bonded to coated glass. The surface must be cleaned and degreased before bonding. Press the handles firmly after bonding, e.g. apply pressure with a clamp.



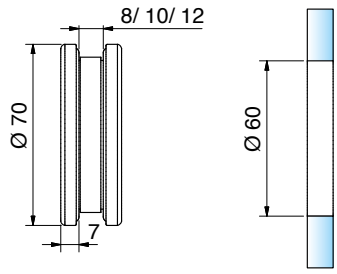

article no.	finish	glass thickn.	article description	pu/pcs.
32028VA-8 32028VA-10 32028VA-12	stainless steel	8/10/12 mm	recess knob, open, threaded Ø 70 mm, raised, 7 mm	1/2



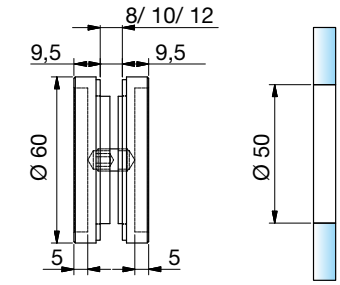

article no.	finish	glass thickn.	article description	pu/pcs.
8514MS7 8514VA	gloss chrome stainless steel	8/10/12 mm	recess knob closed Ø 60 mm, raised 9,5 mm	1/1



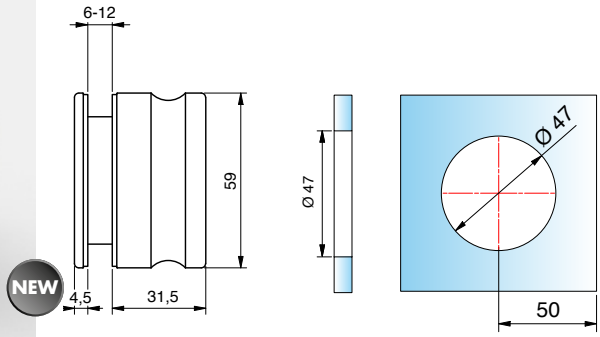

article no.	finish	glass thickn.	article description	pu/pcs.
8822VA-MGE	stainless steel	6-12 mm	knob double-sided, threaded	1/1



inner side with recess



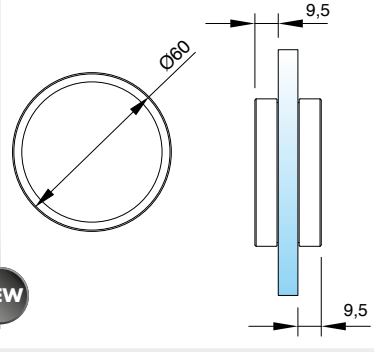

article no.	finish	glass thickn.	article description	pu/pieces
8822MS7-MG 8822MSPVD35-MG 8822VA-MG*	gloss chrome black matt	6-13,52 mm	recess knob, closed, self-adhesive	1/2

*coming soon



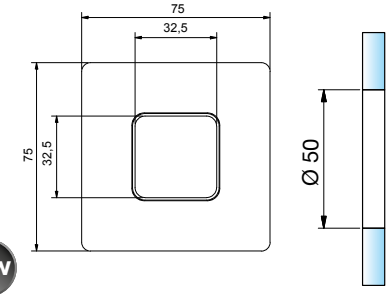

article no.	finish	glass thickn.	article description	pu/pcs.
8371MS7 8371MS10 8371MSPVD22 8371MSPVD35	gloss chrome matt chrome stainless steel optic black matt	8 mm	recess knob, open, self-adhesive, Ø 50 mm, raised, 5,5 mm	1/2

Coating of the glasses in combination with bonded handels is not permissible. Before bonding, the glass must be cleaned with a residue-free degreasing agent.



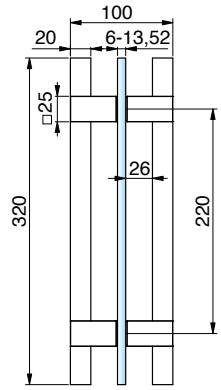

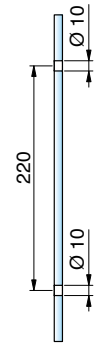

article no.	finish	glass thickness	article description	pu/pieces
8373ZN5-HEM	gloss chrome/ wood (hemlock)	6-10 mm	glass door handle for sauna	1/1
8373ZN1-HEM	matt chrome/ wood (hemlock)			
8373ZN10-HEM	gloss nickel/ wood (hemlock)			
8373ZNPVD22-HEM	stainless steel optic/ wood (hemlock)			
8373ZNPVD20-HEM	gold optic/ wood (hemlock)			
8373ZNPVD35-HEM	black matt/ wood (hemlock)			



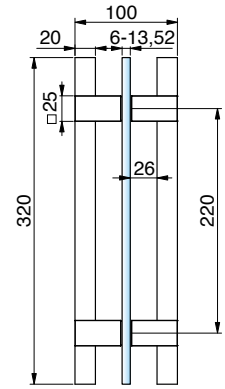

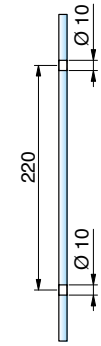

article no.	finish	glass thickness	article description	pu/pieces
8372ZN5-HEM	gloss chrome/wood (Hemlock)	6-13,52 mm	glass door handle for sauna, combination wood/brass	1/1
8372ZNPVD22-HEM	stainless steel optic/wood (Hemlock)			
8372ZNPVD35-HEM	black matt/wood (Hemlock)			



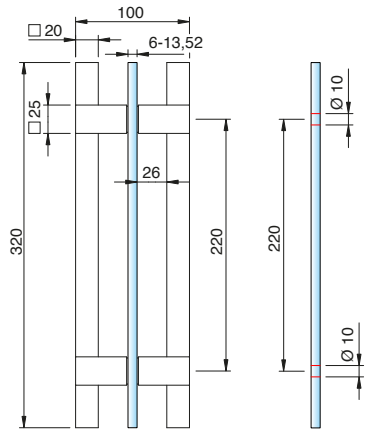

article no.	finish	glass thickn.	article description	pu/pcs.
8370ZN5-320	gloss chrome	6-13,52 mm	glass door handle	1/1
8370ZN1-320	matt chrome			
8370ZNPVD22-320	stainless steel optic			
8370ZNPVD35-320	black matt			



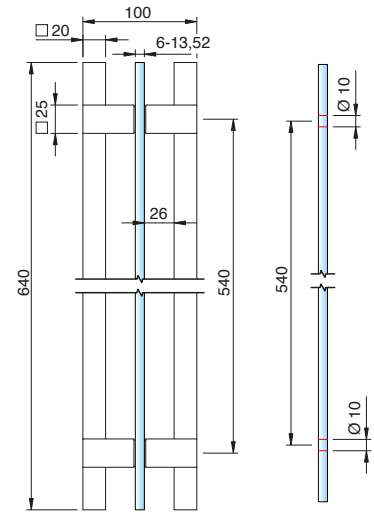

article no.	finish	glass thickn.	article description	pu/pcs.
8370ZN1-640	matt chrome	6-13,52 mm	glass door handle	1/1
8370ZNPVD22-640	stainless steel optic			
8370ZNPVD35-640	black matt			

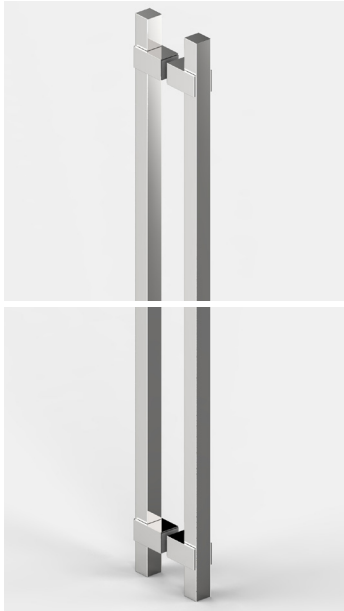

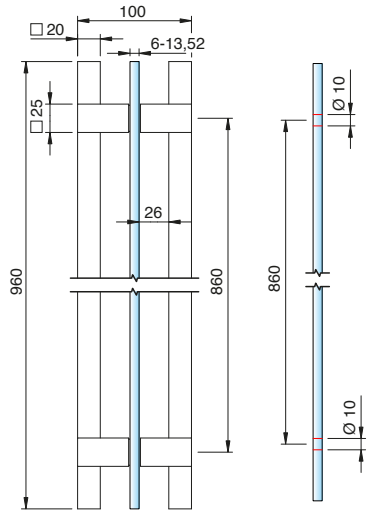

article no.	finish	glass thickn.	article description	pu/pcs.
8370ZN1-960	matt chrome	6-13,52 mm	glass door handle	1/1
8370ZNPVD22-960	stainless steel optic			
8370ZNPVD35-960	black matt			

finishs for 8370_

article no.	holder (ZN)	tube (VA)
8370ZN5-320	gloss chrome	aluminum gloss chrome
8370ZN1-320	matt chrome	aluminum aluminum optic anodized
8370ZNPVD22-320	stainless steel optic	aluminum stainless steel optic anodized
8370ZNPVD35-320	black matt	aluminum black anodized
8370ZN1-640	matt chrome	aluminum aluminum optic anodized
8370ZNPVD22-640	stainless steel optic	aluminum stainless steel optic anodized
8370ZNPVD35-640	black matt	aluminum black anodized
8370ZN1-960	matt chrome	aluminum aluminum optic anodized
8370ZNPVD22-960	stainless steel optic	aluminum stainless steel optic anodized
8370ZNPVD35-960	black matt	aluminum black anodized

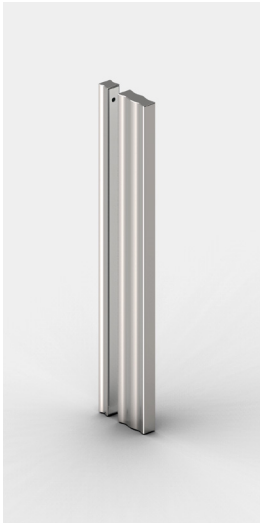

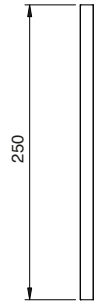

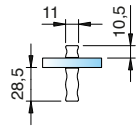

article no.	finish	glass thickn.	article description	pu/pieces
8822MS7-SG-250	gloss chrome	6-12 mm	glass door handle	1/1
8822MS10-SG-250	matt chrome		self-adhesive	
8822MSPVD35-SG-250	black matt			

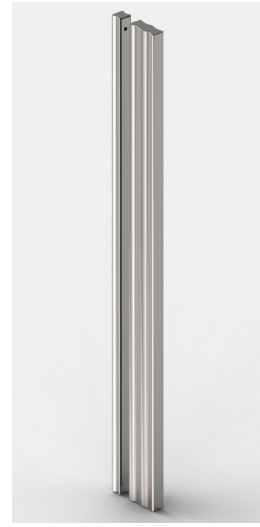

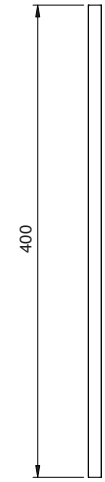

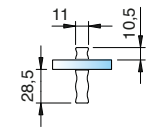

article no.	finish	glass thickn.	article description	pu/pieces
8822MS7-SG-400	gloss chrome	6-12 mm	glass door handle	1/1
8822MS10-SG-400	matt chrome		self-adhesive	
8822MSPVD35-SG-400	black matt			

note: The self-adhesive handles may not be bonded to coated glass. The surface must be cleaned and degreased before bonding. Press the handles firmly after bonding, e.g. apply pressure with a clamp.

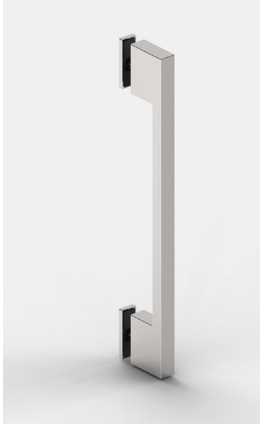

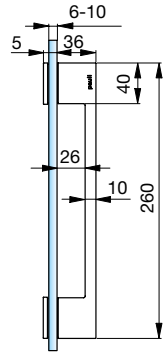



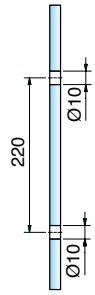

article no.	finish	glass thickn.	article description	pu/pieces
8276ZN5	gloss chrome	6-10 mm	door handle single sided	1/2
8276ZN1	matt chrome			
8276ZNPVD22	stainless steel optic			



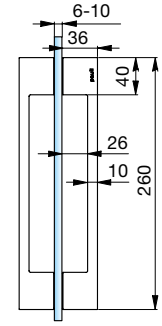

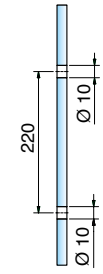

article no.	finish	glass thickn.	description	pu/pcs
8277ZN5	gloss chrome	6-10 mm	door handle double sided	1/1
8277ZN1	matt chrome			
8277ZN10	gloss nickel			
8277ZNPVD22	stainless steel optic			
8277ZNPVD20	gold optic			
8277ZN5-A	gloss chrome		door handle double sided without logo	
8277ZN1-A	matt chrome			
8277ZNPVD22-A	stainless steel optic			
8277ZNPVD35-A	black matt			
8277ZN135-A	deep black matt			



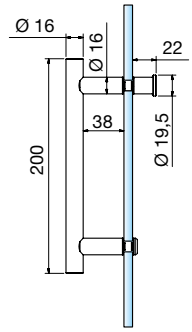

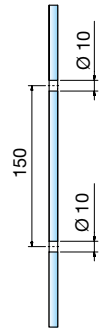

article no.	finish	glass thickn.	article description	pu/pcs
8065VA-200	stainless steel	6-10 mm	door handle single sided raised head, with handle piece	1/1
8065VA1-200	stainless steel polished			



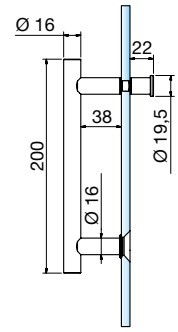

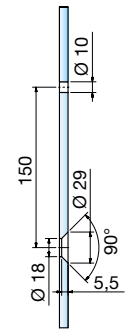

article no.	finish	glass thickn.	article description	pu/pcs
8066VA-200	stainless steel	6-10 mm	door handle single sided flush, with handle piece	1/1
8066VA1-200	stainless steel polished			



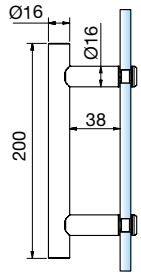

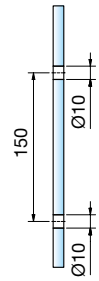

article no.	finish	glass thickn.	article description	pu/pcs
8061VA-200	stainless steel	6-10 mm	door handle single sided raised head	1/1
8061VA1-200	stainless steel polished			

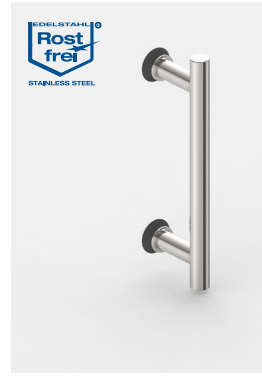

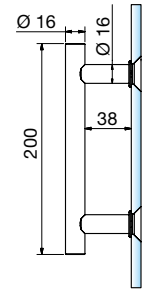

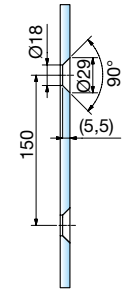

article no.	finish	glass thickn.	article description	pu/pcs
8062VA-200	stainless steel	6-10 mm	door handle single sided, flush	1/1
8062VA1-200	stainless steel polished			



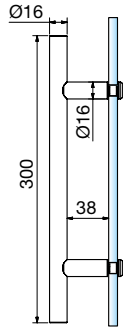

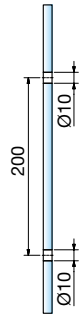

article no.	finish	glass thickn.	article description	pu/pcs
8061VA-300	stainless steel	6-10 mm	door handle single sided raised head	1/1
8061VA1-300	stainless steel polished			

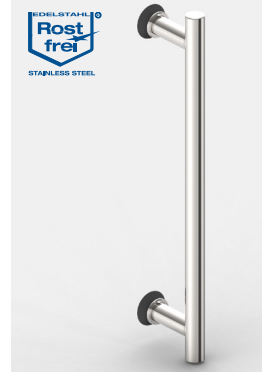

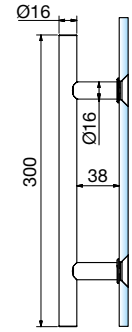

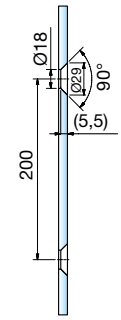

article no.	finish	glass thickn.	article description	pu/pcs
8062VA-300	stainless steel	6-10 mm	door handle single sided, flush	1/1
8062VA1-300	stainless steel polished			



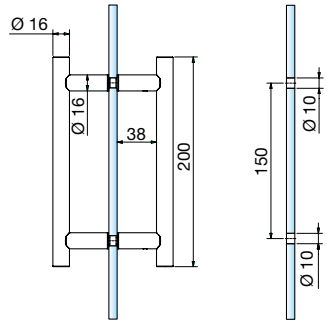

article no.	finish	glass thickn.	article description	pu/pcs
8060VA-200	stainless steel	6-10 mm	door handle double sided	1/1
8060VA1-200	stainless steel polished			



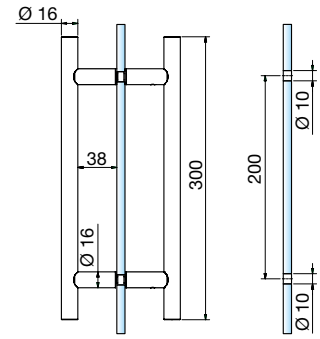

article no.	finish	glass thickn.	article description	pu/pcs
8060VA-300	stainless steel	6-10 mm	door handle double sided	1/1
8060VA1-300	stainless steel polished			


8278ZN


8252ZN


8277ZN


8379ZN

mounted onto the glassedge, no glass processing necessary

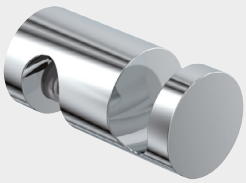

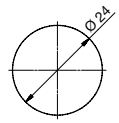

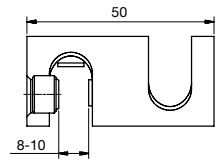



article no.	finish	glass thickn.	article description	pu/pcs.
8696MS7	gloss chrome	8-10 mm	towel holder	1/1
8696MS10	matt chrome			
8696MSPVD22	stainless steel optic			

length variable up to 1000 mm
please include axis dimension in the order
longer length upon request.



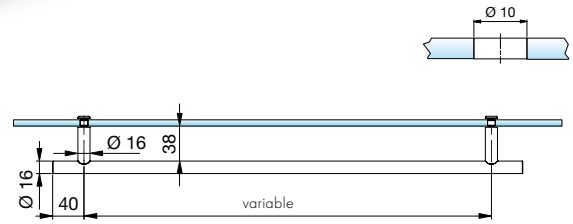

article no.	finish	glass thickn.	article description	pu/pcs.
8063VA-V	stainless steel	6-10 mm	towel bar for glass, raised head	1/1
8063VA1-V	stainless steel polished			

When ordering, please specify the axis dimension! Longer lengths on request.


8376ZN_-FO


8376ZN_-FU

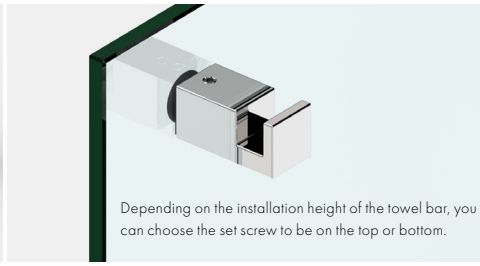

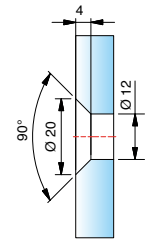

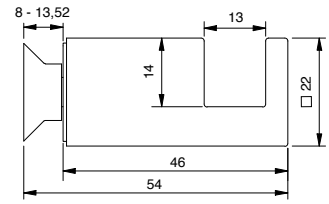

article no.	finish	glass thickn.	article description	pu/pcs
8376ZN5-FO	gloss chrome	8-13,52 mm	towel bar	1/1
8376ZN1-FO	matt chrome		flush	
8376ZNPVD22-FO	stainless steel optic		set screw on top	
8376ZNPVD20-FO	gold optic			
8376ZN135-FO	deep black matt			

article no.	finish	glass thickn.	article description	pu/pcs
8376ZN5-FU	gloss chrome	8-13,52 mm	towel bar	1/1
8376ZN1-FU	matt chrome		flush	
8376ZNPVD22-FU	stainless steel optic		set screw underneath	
8376ZNPVD20-FU	gold optic			
8376ZN135-FU	deep black matt			


8376ZN_-GO


8376ZN_-GU

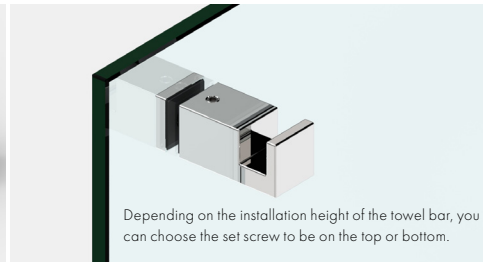

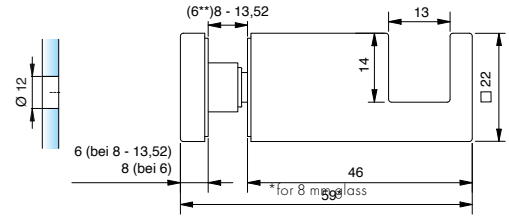

article no.	finish	glass thickn.	article description	pu/pcs
8376ZN5-GO	gloss chrome	(6**) mm	towel bar	1/1
8376ZN1-GO	matt chrome	8-13,52 mm	raised head	
8376ZNPVD22-GO	stainless steel optic		set screw on top	
8376ZNPVD20-GO	gold optic			
8376ZN135-GO	deep black matt			

article no.	finish	glass thickn.	article description	pu/pcs
8376ZN5-GU	gloss chrome	(6**) mm	towel bar	1/1
8376ZN1-GU	matt chrome	8-13,52 mm	raised head	
8376ZNPVD22-GU	stainless steel optic		set screw underneath	
8376ZNPVD20-GU	gold optic			
8376ZN135-GU	deep black matt			

*article No. 8274-4HZ replaces article No. 8274-2HZ when using FTG-6. 8274-4HZ must be ordered separately for FTG-6.


8376ZN_-WO

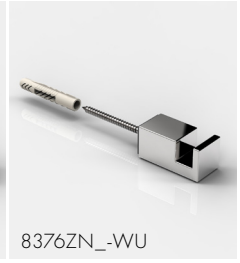
8376ZN_-WU



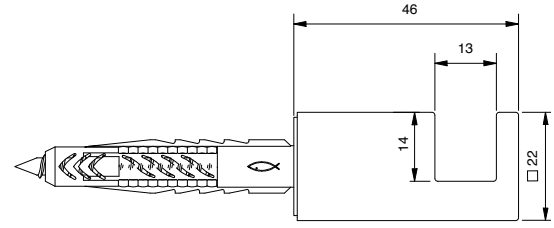

article no.	finish	article description	pu/pcs
8376ZN5-WO	gloss chrome	towel bar	1/1
8376ZN1-WO	matt chrome	wall mounted	
8376ZNPVD22-WO	stainless steel optic	set screw on top	
8376ZNPVD20-WO	gold optic		
8376ZN135-WO	deep black matt		

article no.	finish	article description	pu/pcs
8376ZN5-WU	gloss chrome	towel bar	1/1
8376ZN1-WU	matt chrome	wall mounted	
8376ZNPVD22-WU	stainless steel optic	set screw underneath	
8376ZNPVD20-WU	gold optic		
8376ZN135-WU	deep black matt		



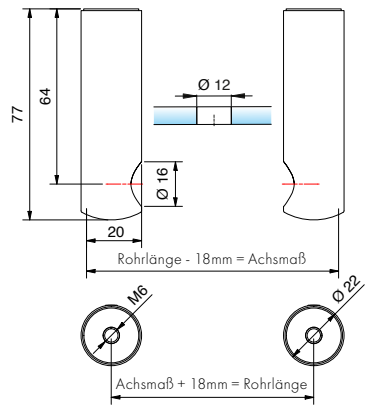

article no.	finish	glass thickn.	article description	pu/pcs
8686ZN5-AT	gloss chrome	6 - 13,52 mm	exterior parts, left and right, for towel support bars, round	1/1
8686ZN1-AT	matt chrome			
8686ZNPVD22-AT	stainless steel optic			
8686ZN135-AT	deep black matt			





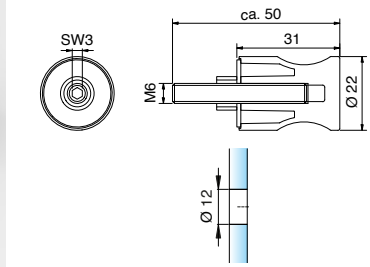

article no.	finish	glass thickn.	article description	pu/pcs
8686ZN5-GS	gloss chrome	6 - 13,52 mm	handle for towel support bars, round	1/1
8686ZN1-GS	matt chrome			
8686ZNPVD22-GS	stainless steel optic			
8686ZN135-GS	deep black matt			





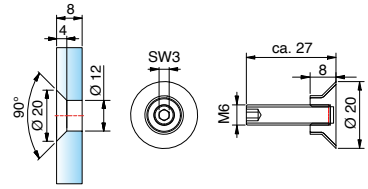

article no.	finish	glass thickn.	article description	pu/pcs
8686VA-F*	stainless steel	6 - 13,52 mm	flush point fixture for towel support bars	1/1
8686VAPVD35-F	black matt			





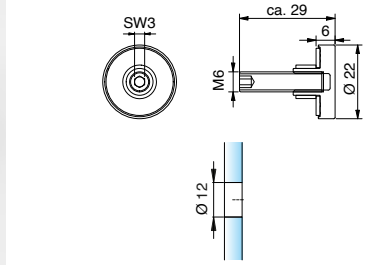

article no.	finish	glass thickn.	article description	pu/pcs
8686ZN5-E	gloss chrome	6 - 13,52 mm	raised point fixture for towel support bars, round	1/1
8686ZN1-E	matt chrome			
8686ZNPVD22-E	stainless steel optic			
8686ZN135-E	deep black matt			

*__note:__ 8686VA-F (stainless steel) can be combined with gloss chrome (ZN5), matt chrome (ZN1) and stainless steel look (ZNPVD22).

tube for towel bar 8686

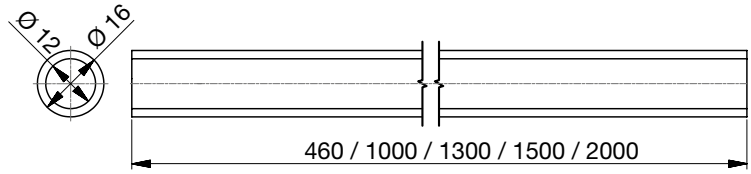





article no.	finish	length
8444-1E123-460	stainless steel optic	460 mm
8444-1E123-1000	stainless steel optic	1000 mm
8444-1E123-1500	stainless steel optic	1500 mm
8444-1E123-2000	stainless steel optic	2000 mm
8444-1E6EV5-460	pickled aluminum polished and anodized	460 mm
8444-1E6EV5-1000	pickled aluminum polished and anodized	1000 mm
8444-1E6EV5-1500	pickled aluminum polished and anodized	1500 mm
8444-1E6EV5-2000	pickled aluminum polished and anodized	2000 mm
8444-1E6EV1-1000	aluminum optic (anodised silver)	1000 mm
8444-1E6EV1-1500	aluminum optic (anodised silver)	1500 mm
8444-1MS7-1300	gloss chrome	1300 mm
8444-1E6E35-1000	deep black matt	1000 mm
8444-1E6E35-1500	deep black matt	1500 mm
8444-1E6E35-2000	deep black matt	2000 mm

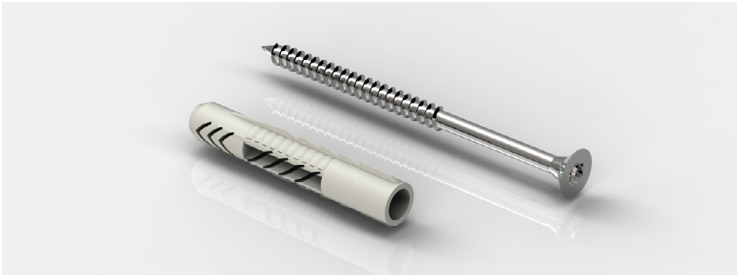



article no.	article description	pu/pcs
Z102	Screw 5x80mm TX25 with dowel 8x50 for wall mounting the towel holder 8686/8688	1/1



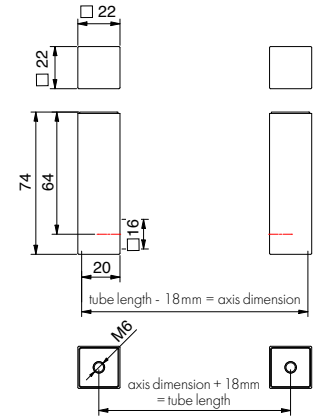

article no.	finish	glass thickn.	article description	pu/pcs
8688ZN5-AT	gloss chrome	6 - 13,52 mm	exterior parts, left and right for towel support bars, square	1/1
8688ZN1-AT	matt chrome			
8688ZNPVD20-AT	gold optic			
8688ZNPVD22-AT	stainless steel optic			
8688ZN135-AT	deep black matt			



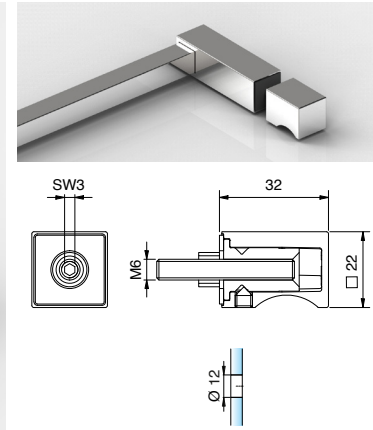

article no.	finish	glass thickn.	article description	pu/pcs
8688ZN5-GS	gloss chrome	6 - 13,52 mm	handle for towel support bars, square	1/1
8688ZN1-GS	matt chrome			
8688ZNPVD20-GS	gold optic			
8688ZNPVD22-GS	stainless steel optic			
8688ZN135-GS	deep black matt			



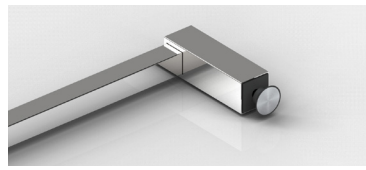

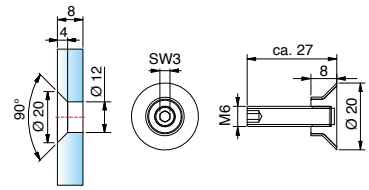

article no.	finish	glass thickn.	article description	pu/pcs
8686VA-F*	stainless steel	6 - 13,52 mm	flush point fixture for towel support bars	1/1
8686VAPVD20-F	gold optic			
8686VAPVD35-F	black matt			

***note:** 8686VA-F (stainless steel) can be combined with gloss chrome (ZN5), matt chrome (ZN1) and stainless steel look (ZNPVD22).



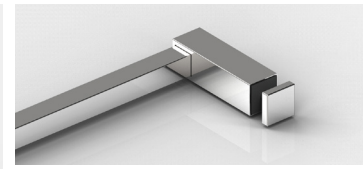

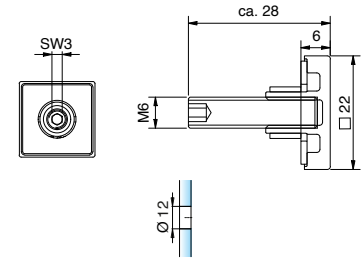

article no.	finish	glass thickn.	article description	pu/pcs
8688ZN5-E	gloss chrome	6 - 13,52 mm	raised point fixture for towel support bars, square	1/1
8688ZN1-E	matt chrome			
8688ZNPVD20-E	gold optic			
8688ZNPVD22-E	stainless steel optic			
8688ZN135-E	deep black matt			



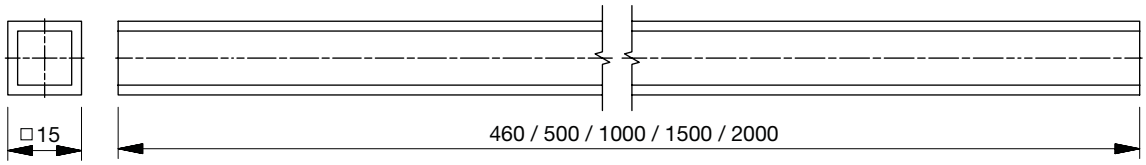



article no.	finish	length
8688-5E6EV5-460	pickled aluminum polished and anodized	460 mm
8688-5E6EV5-1000	pickled aluminum polished and anodized	1000 mm
8688-5E6EV5-1500	pickled aluminum polished and anodized	1500 mm
8688-5E6EV5-2000	pickled aluminum polished and anodized	2000 mm
8688-5E6EV1-1000	aluminum optic (anodised silver)	1000 mm
8688-5E6EV1-1500	aluminum optic (anodised silver)	1500 mm
8688-5E6EV1-2000	aluminum optic (anodised silver)	2000 mm
8688-5MS7-1300	gloss chrome	1300 mm
8688-5MSPVD20-500	gold optic	500 mm
8688-5MSPVD20-1000	gold optic	1000 mm
8688-5MS5-500	gloss nickel	500 mm
8688-5MS5-1000	gloss nickel	1000 mm
8688-5E123-460	stainless steel optic	460 mm
8688-5E123-1000	stainless steel optic	1000 mm
8688-5E123-1500	stainless steel optic	1500 mm
8688-5E123-2000	stainless steel optic	2000 mm
8688-5E6C35-1000	deep black matt	1000 mm
8688-5E6C35-1500	deep black matt	1500 mm
8688-5E6C35-2000	deep black matt	2000 mm
8688-5AL134-1500	white matt	1500 mm



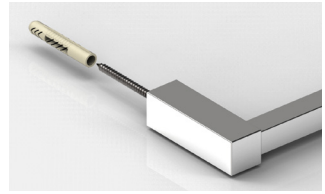

article no.	article description	pu/pcs
Z102	Screw 5x80mm TX25 with dowel 8x50 for wall mounting the towel holder 8686/8688	1/1

new stabilizer-bars

NEW

MADE
IN
GERMANY

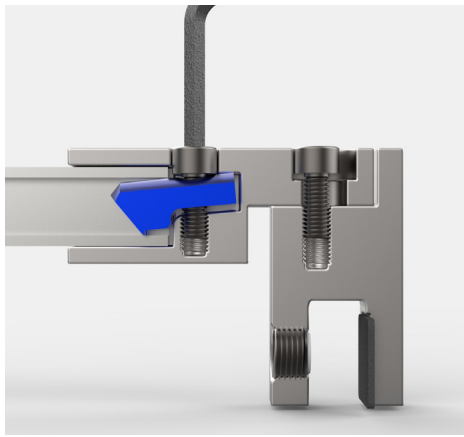

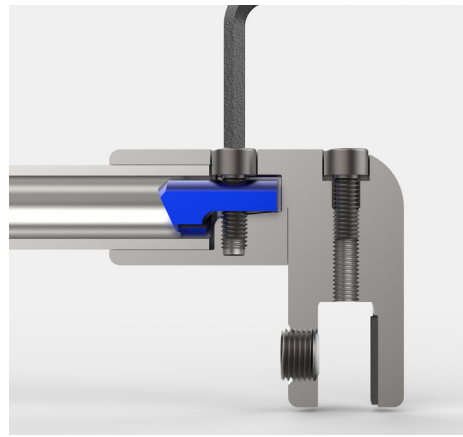

Pauli + Sohn has redesigned the shortenable stabilizer-bars from scratch. The round and angular systems offer more stability thanks to the new clamping technology and are easier to install.

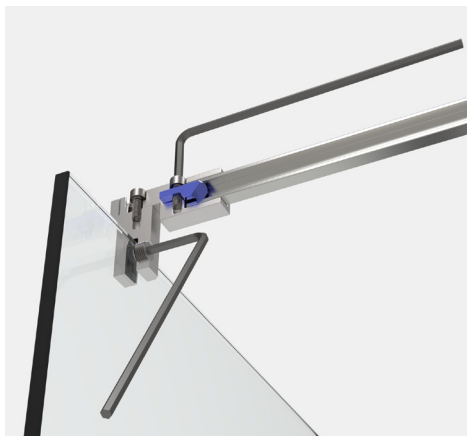

new clamp technique

The internal clamp is pressed against the tube by means of an hexagon socket screw

simplified assembly

All screws on the individual supports, as well as on the complete bars can be fastened with one hex key.

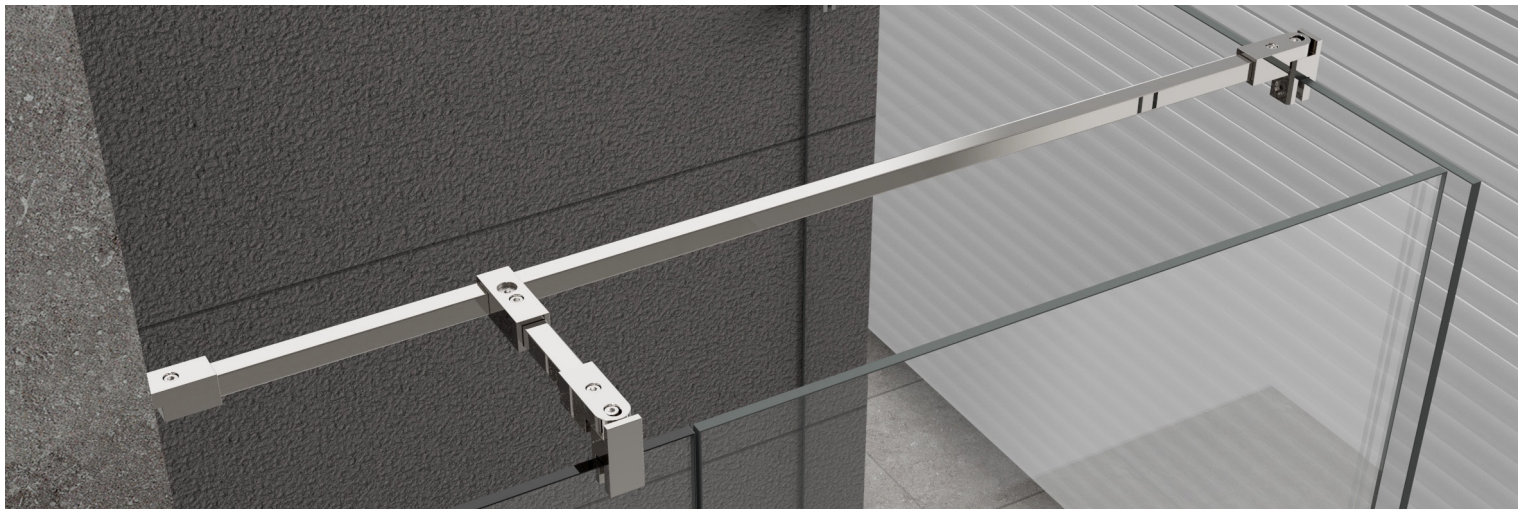

stabilizer-bar sets, square





article no.	finish	tube finish	glass thickness	article description	pu/pieces
8794ZN5-1000	gloss chrome	pickled aluminum polished and anodized	6-10 mm	stabilizer-bar set glass-wall	1/1

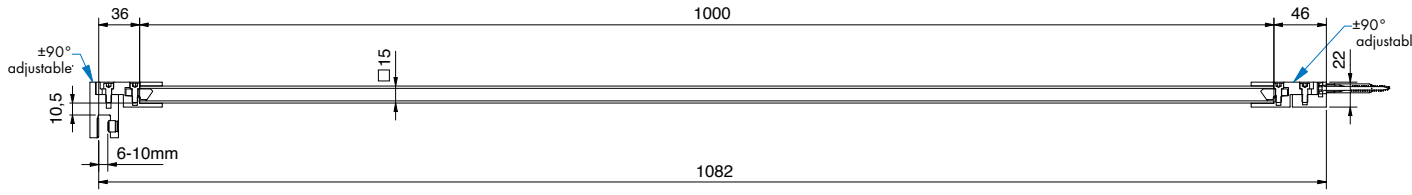

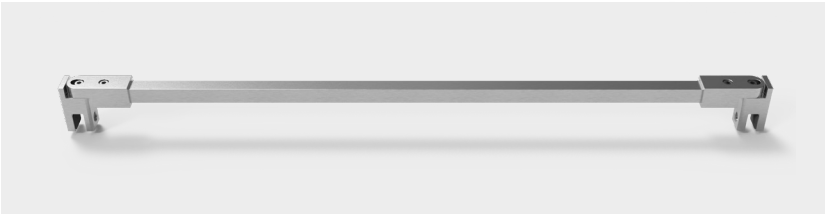



article no.	finish	tube finish	glass thickness	article description	pu/pieces
8795ZN5-1000	gloss chrome	pickled aluminum polished and anodized	6-10 mm	stabilizer-bar set glass-glass	1/1

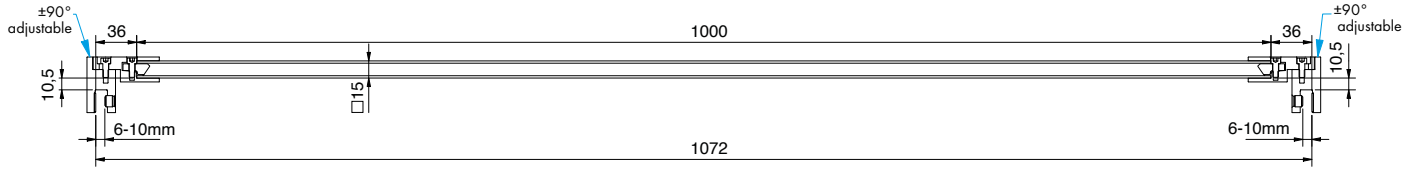





article no.	finish	tube finish	glass thickness	article description	pu/pieces
8797ZN5-460	gloss chrome	pickled aluminum polished and anodized	6-10 mm	stabilizer-bar set, glass-T-piece	1/1

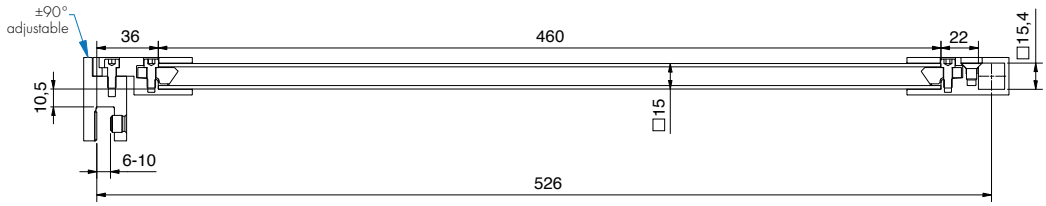

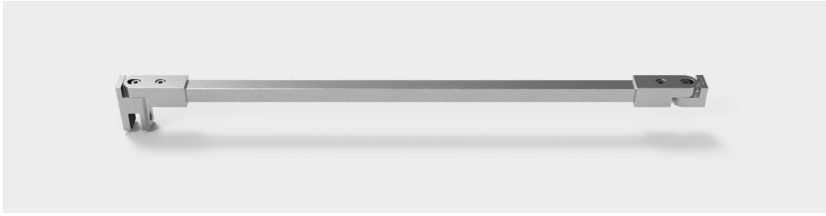

article no.	finish	tube finish	glass thickness	article description	pu/pieces
8796ZN5-460	gloss chrome	pickled aluminum polished and anodized	6-10 mm	stabilizer-bar set, glass-wall 45°	1/1

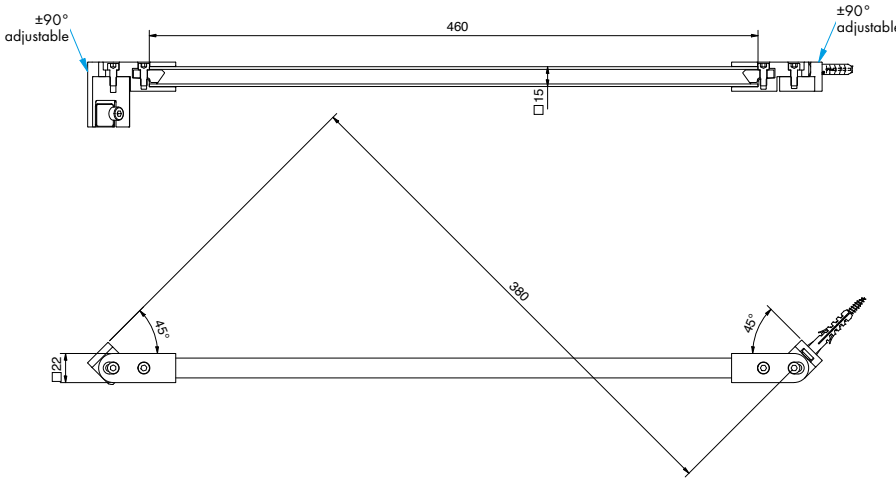







article no.	finish	tube finish	glass thickness	article description	pu/pieces
8798ZN5-1500	gloss chrome	pickled aluminum polished and anodized	6-10 mm	stabilizer-bar set glass-wall	1/1

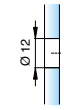

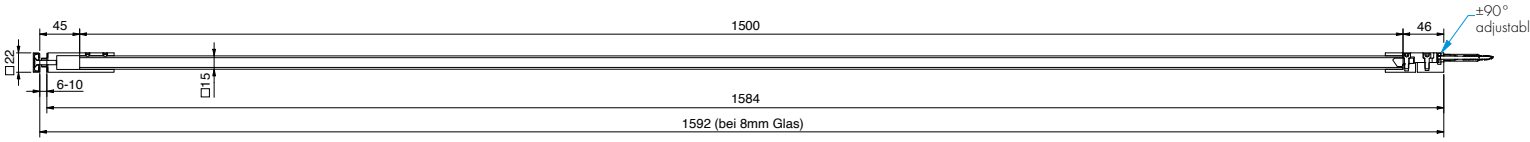

tube

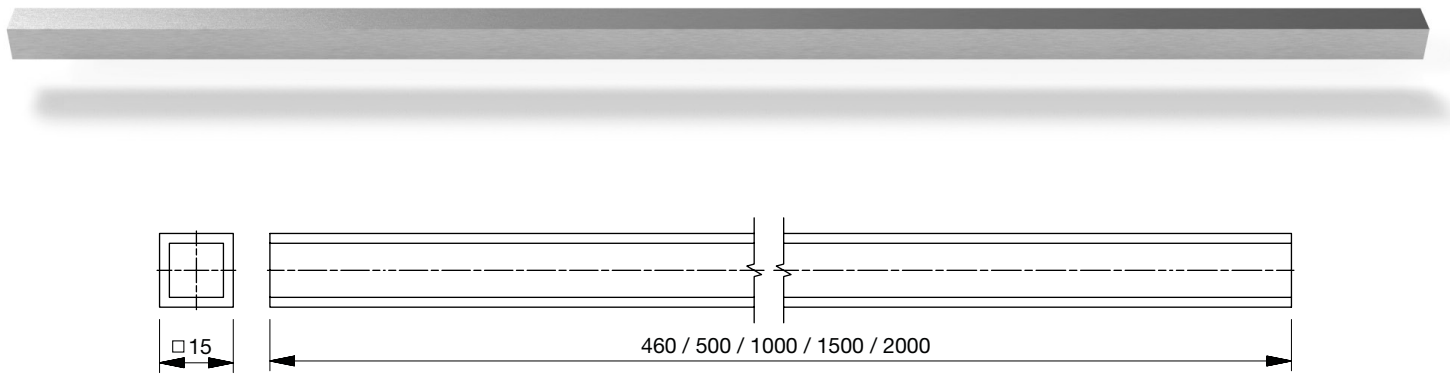

8688- tube for stabalizer bar

finish for 8688

article no.	finish	length
8688-5E6EV5-460	pickled aluminum polished and anodized	460 mm
8688-5E6EV5-1000	pickled aluminum polished and anodized	1000 mm
8688-5E6EV5-1500	pickled aluminum polished and anodized	1500 mm
8688-5E6EV5-2000	pickled aluminum polished and anodized	2000 mm
8688-5E6EV1-1000	aluminum optic (anodised silver)	1000 mm
8688-5E6EV1-1500	aluminum optic (anodised silver)	1500 mm
8688-5E6EV1-2000	aluminum optic (anodised silver)	2000 mm
8688-5MS7-1300	gloss chrome	1300 mm
8688-5MSPVD20-500	gold optic	500 mm
8688-5MSPVD20-1000	gold optic	1000 mm
8688-5MS5-500	gloss nickel	500 mm
8688-5MS5-1000	gloss nickel	1000 mm
8688-5E123-460	stainless steel optic	460 mm
8688-5E123-1000	stainless steel optic	1000 mm
8688-5E123-1500	stainless steel optic	1500 mm
8688-5E123-2000	stainless steel optic	2000 mm
8688-5E6C35-1000	deep black matt	1000 mm
8688-5E6C35-1500	deep black matt	1500 mm
8688-5E6C35-2000	deep black matt	2000 mm
8688-5AL134-1500	white matt	1500 mm

for tube □ 15 mm



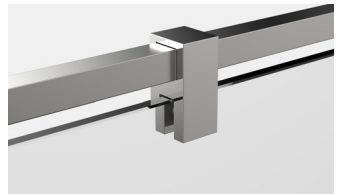

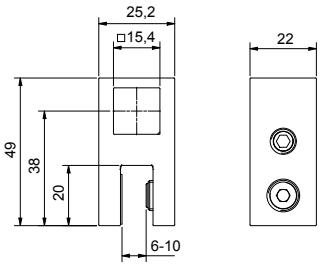

article no.	finish*	glass thickness	article description	pu/pieces
8794ZN5-GTL 8794ZN1-GTL 8794ZNPVD22-GTL 8794ZNPVD20-GTL 8794ZN10-GTL 8794ZN135-GTL	see page 324	6-10 mm	glass T-adapter	1/1

for tube □ 15 mm



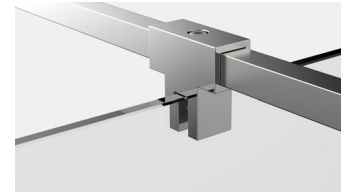

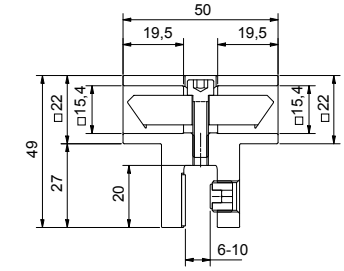

article no.	finish*	glass thickness	article description	pu/pieces
8794ZN5-TS 8794ZN1-TS 8794ZNPVD22-TS 8794ZNPVD20-TS 8794ZN10-TS 8794ZN135-TS	see page 324	6-10 mm	glass T-adapter side panel, double sided	1/1

for tube □ 15 mm

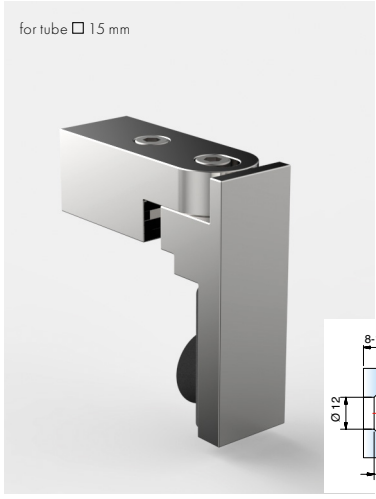



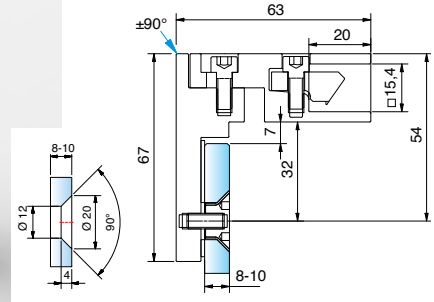

article no.	finish*	glass thickness	article description	pu/pieces
8794ZN5-GF 8794ZN1-GF 8794ZNPVD22-GF 8794ZNPVD20-GF 8794ZN10-GF 8794ZN135-GF	see page 324	6-10 mm	glass adapter flush 45° adjustable	1/1

for tube □ 15 mm



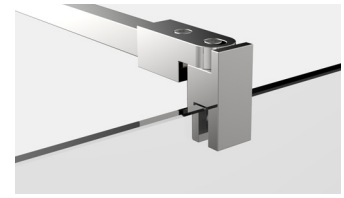

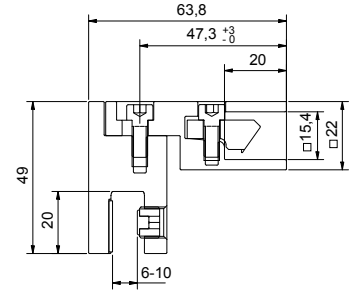

article no.	finish*	glass thickness	article description	pu/pieces
8794ZN5-GL 8794ZN1-GL 8794ZNPVD22-GL 8794ZNPVD20-GL 8794ZN10-GL 8794ZN135-GL 8794ZN134-GL	see page 324	6-10 mm	glass adapter 90° adjustable	1/1

These individual parts were also developed to fit lifting hardware.

for tube ☐ 15 mm

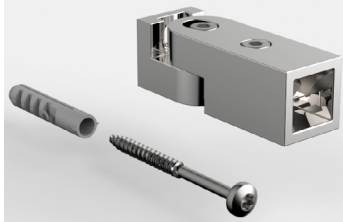



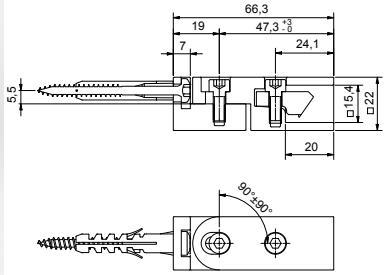

article no.	finish*	article description	pu/pcs
8794ZN5-WV 8794ZN1-WV 8794ZNPVD22-WV 8794ZNPVD20-WV 8794ZN10-WV 8794ZN135-WV 8794ZN134-WV	see chart	wall adapter adjustable ± 90°	1/1

for tube ☐ 15 mm

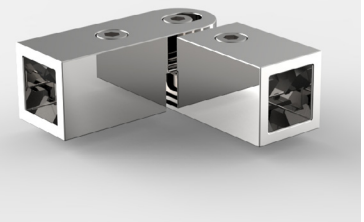

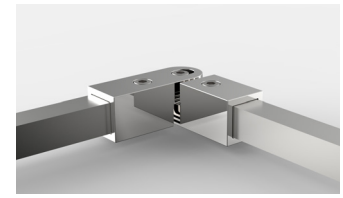

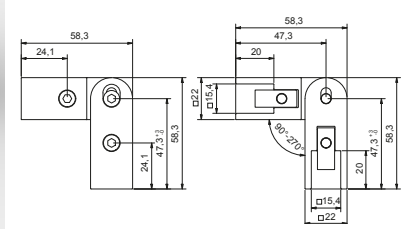

article no.	finish*	article description	pu/pcs
8794ZN5-EV 8794ZN1-EV 8794ZNPVD22-EV 8794ZNPVD20-EV 8794ZN10-EV 8794ZN135-EV	see chart	angle adapter adjustable 90-180°	1/1

for tube ☐ 15 mm



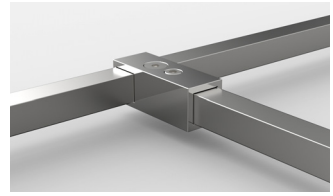

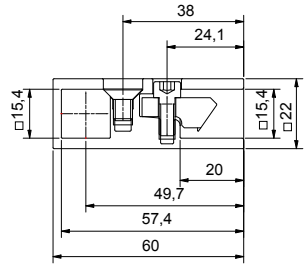

article no.	finish*	article description	pu/pcs.
8797ZN5-T 8797ZN1-T 8797ZNPVD22-T 8797ZNPVD20-T 8797ZN10-T 8797ZN135-T 8797ZN134-T	see chart	T-adapter	1/1

*available finishs

article no.	finish
ZN5	gloss chrome
ZN1	matt chrome
ZNPVD22	stainless steel optic
ZNPVD20	gold optic
ZNPVD35	black matt
ZN10	gloss nickel
ZN135	deep black matt
ZN134	white matt

Note

For the stability of the shower we recommend that when using the shortenable round or square stabilizer-bar to not go longer than 1200 mm. Please take into account when planning: A shower enclosure using a railing system above a certain size, will not reach the stability of a shower enclosure with stabilizer-bar and T-adapter.



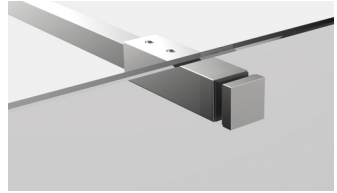

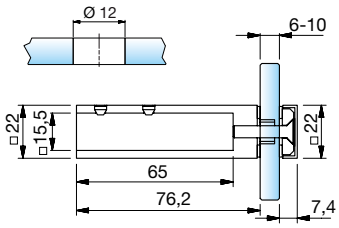

article no.	finish	article description	pu/pieces
8498MS7-G	gloss chrome	glass adapter side panel	1/1
8498MSPVD35-G	black matt		



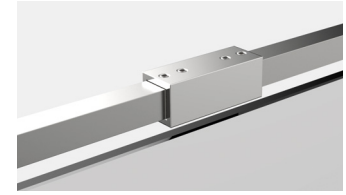

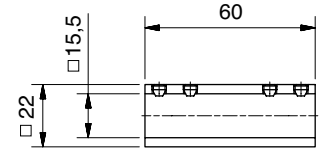

article no.	finish	article description	pu/pieces
8494MS7-V180	gloss chrome	tube connector 180°	1/1
8494MSPVD35-V180	black matt		



stabilizer-bar sets, round

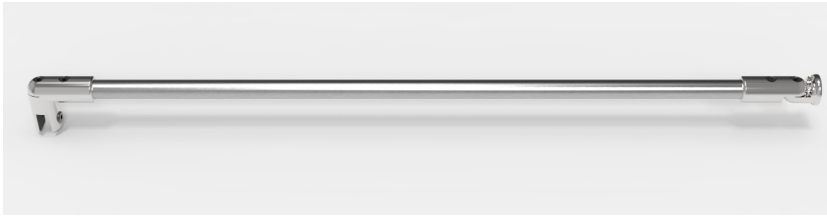



article no.	finish	tube finish	glass thickness	article description	pu/pieces
8744ZN5-1000	gloss chrome	pickled aluminum polished and anodized	6-10 mm	stabilizer-bar set, glass-wall	1/1

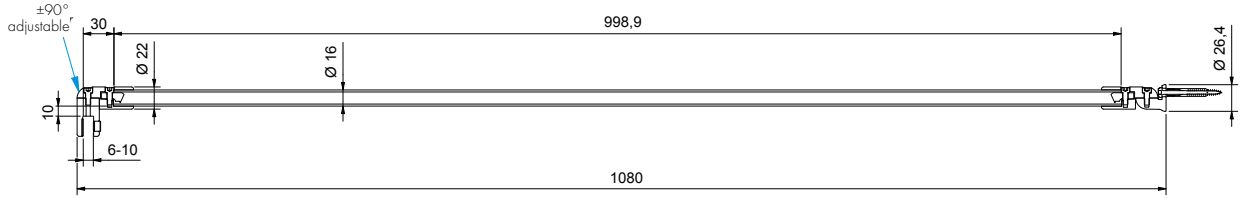



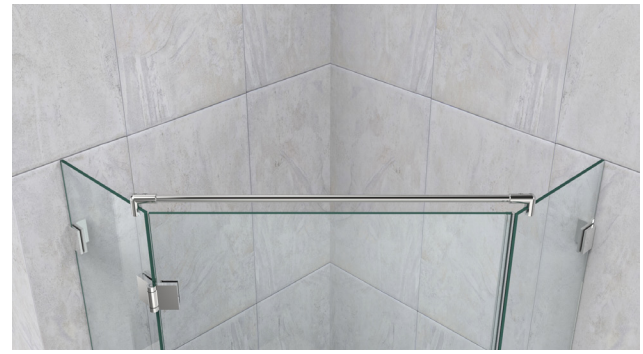

article no.	finish	tube finish	glass thickness	article description	pu/pieces
8745ZN5-1000	gloss chrome	pickled aluminum polished and anodized	6-10 mm	stabilizer-bar set, glass-glass	1/1

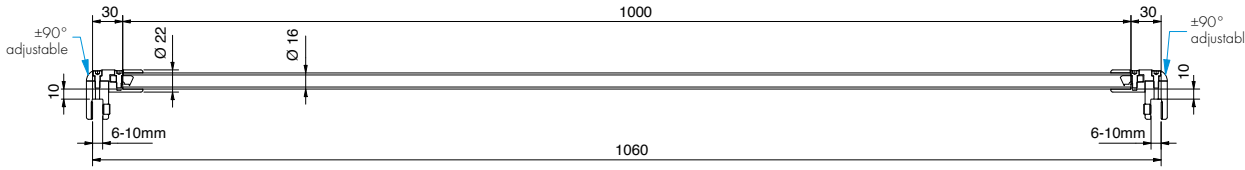





article no.	finish	tube finish	glass thickness	article description	pu/pieces
8747ZN5-460	gloss chrome	pickled aluminum polished and anodized	6-10 mm	stabilizer-bar set, glass-T-adapter	1/1

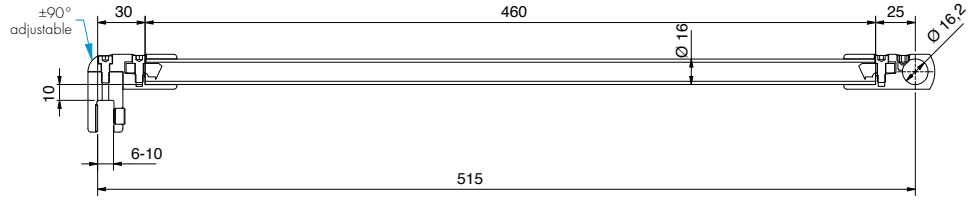



article no.	finish	tube finish	glass thickness	article description	pu/pieces
8746ZN5-460	gloss chrome	pickled aluminum polished and anodized	6-10 mm	stabilizer-bar set, glass-wall 45°	1/1

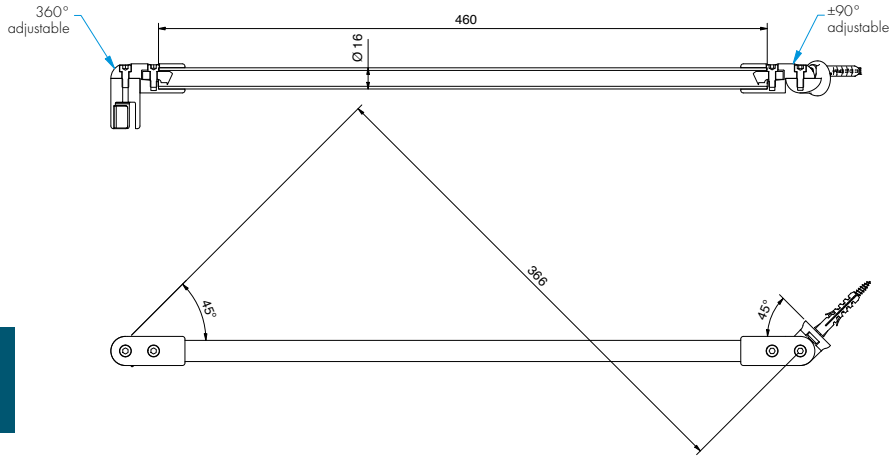



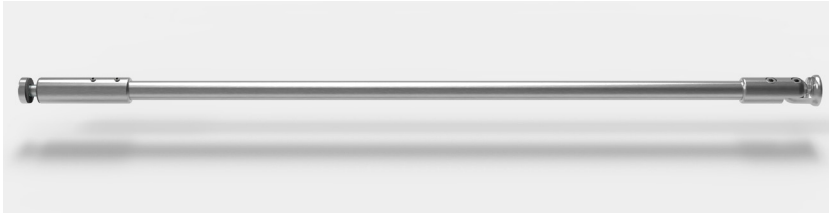



article no.	finish	tube finish	glass thickness	article description	pu/pieces
8748ZN5-1500	gloss chrome	pickled aluminum polished and anodized	6-10 mm	stabilizer-bar set, glass-wall	1/1

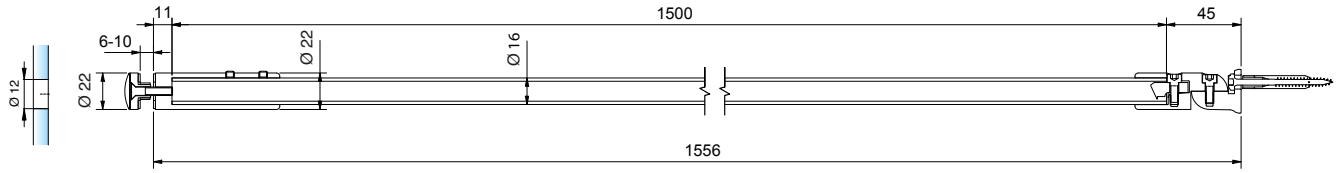

tube for stabilizer-bar

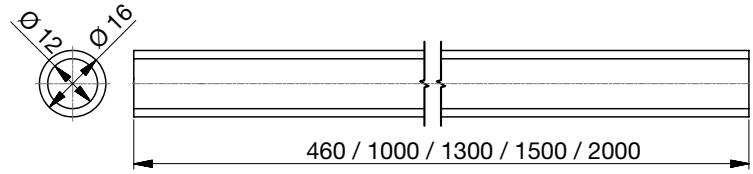



article no.	finish	length
8444-1E123-460	stainless steel optic	460 mm
8444-1E123-1000	stainless steel optic	1000 mm
8444-1E123-1500	stainless steel optic	1500 mm
8444-1E123-2000	stainless steel optic	2000 mm
8444-1E6EV5-460	pickled aluminum polished and anodized	460 mm
8444-1E6EV5-1000	pickled aluminum polished and anodized	1000 mm
8444-1E6EV5-1500	pickled aluminum polished and anodized	1500 mm
8444-1E6EV5-2000	pickled aluminum polished and anodized	2000 mm
8444-1E6EV1-1000	aluminum optic (anodised silver)	1000 mm
8444-1E6EV1-1500	aluminum optic (anodised silver)	1500 mm
8444-1E6EV1-2000	aluminum optic (anodised silver)	2000 mm
8444-1MS7-1300	gloss chrome	1300 mm
8444-1E6C35-1000	deep black matt	1000 mm
8444-1E6C35-1500	deep black matt	1500 mm
8444-1E6C35-2000	deep black matt	2000 mm

for tube Ø 16 mm



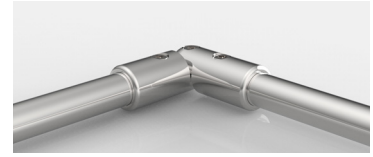

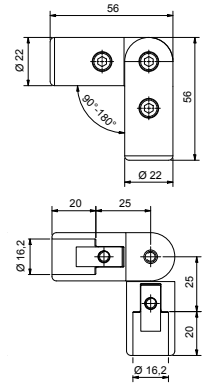

article no.	finish	article description	pu/pieces
8744ZN5-EV	gloss chrome	angle adapter ±90° adjustable	1/1
8744ZN1-EV	matt chrome		
8744ZNPVD22-EV	stainless steel optic		
8744ZN135-EV	deep black matt		

for tube Ø 16 mm



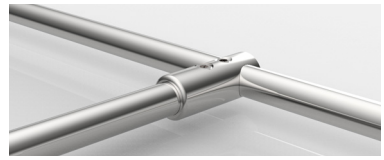

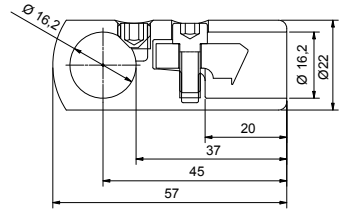

article no.	finish*	glass thickness	article description	pu/pieces
8747ZN5-T 8747ZN1-T 8747ZNPVD22-T 8747ZN135-T	see page 331	6-10 mm	T-adapter	1/1

for tube Ø 16 mm





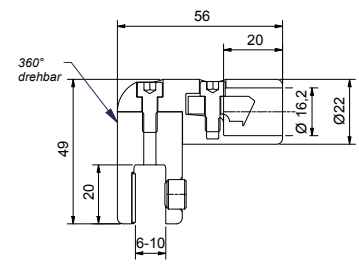

article no.	finish*	article description	pu/pieces
8744ZN5-GL 8744ZN1-GL 8744ZNPVD22-GL 8744ZN135-GL	see page331	glass adapter ±90°adjustable	1/1

for tube Ø 16 mm
±90° adjustable





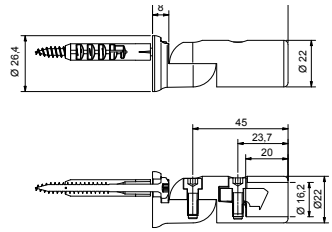

article no.	finish*	article description	pu/pieces
8744ZN5-WV 8744ZN1-WV 8744ZNPVD22-WV 8744ZN135-WV	see page 331	wall adapter ±45° adjustable	1/1

for tube Ø 16 mm





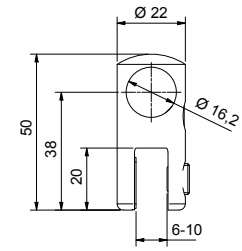

article no.	finish*	article description	pu/pieces
8744ZN5-GTL 8744ZN1-GTL 8744ZNPVD22-GTL 8744ZN135-GTL	see page 331	glass adapter, T-adapter	1/1

for tube Ø 16 mm





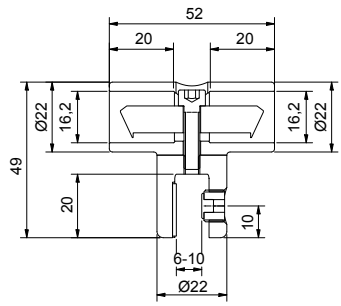

article no.	finish*	article description	pu/pieces
8747ZN5-TS 8747ZN1-TS 8747ZNPVD22-TS 8747ZN135-TS	see chart	glass T-adapter side panel, double sided	1/1

*available finishs

article no.	finish
ZN5	gloss chrome
ZN1	matt chrome
ZNPVD22	stainless steel optic
ZN135	deep black matt

Note

For the stability of the shower we recommend that when using the shortenable round or square stabilizer-bar to not go longer than 1200 mm. Please take into account when planning:

A shower enclosure using a railing system above a certain size, will not reach the stability of a shower enclosure with stabilizer-bar and T-adapter.

for tube Ø 16 mm



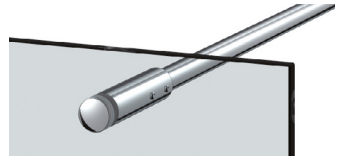

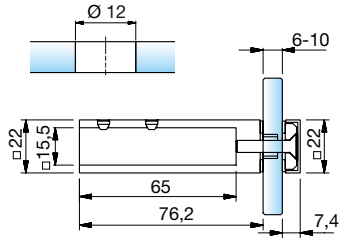

article no.	finish	glass thickness	article description	pu/pieces
8448MS7-G	gloss chrome	6-10 mm	glass adapter for stabilizer-bar	1/1

for tube Ø 16 mm

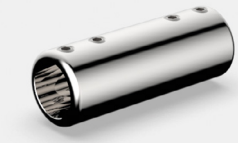

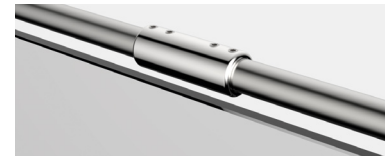

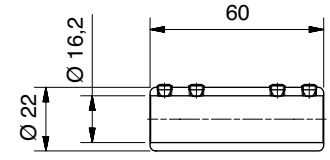

article no.	finish	article description	pu/pieces
8444MS7-V180	gloss chrome	tube connector 180°	1/1

glass thickness: 8-10 mm
with adjustable wall connector for slanted wall / ceilings.
adjustable due to right-left thread inside the rail.

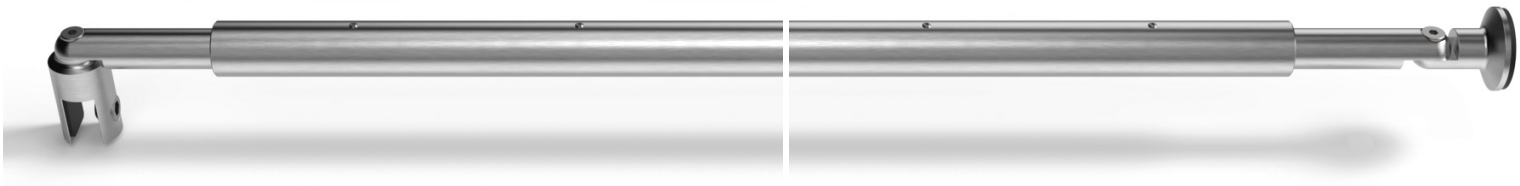

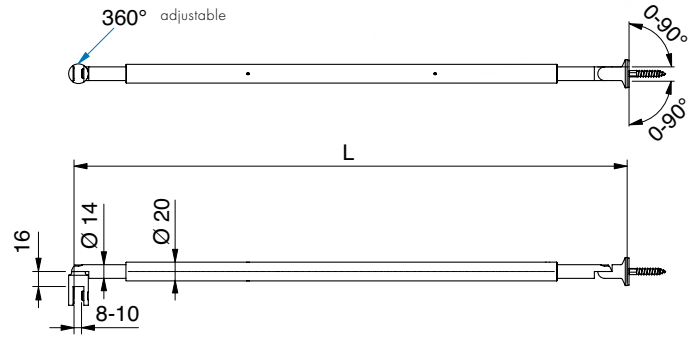

article no.	finish	article description	pu/pc.
8432MS7-395	gloss chrome	stabilizer-bar glass-wall	1/1
8432MS10-395*	matt chrome	adjustable from 365–425 mm	
8432MSPVD22-395*	stainless steel optic		
8432MS7-590	gloss chrome	stabilizer-bar glass-wall	1/1
8432MS10-590*	matt chrome	adjustable from 510–670 mm	
8432MSPVD22-590*	stainless steel optic		
8432MS7-730	gloss chrome	stabilizer-bar glass-wall	1/1
8432MS10-730*	matt chrome	adjustable from 650–810 mm	
8432MSPVD22-730*	stainless steel optic		
8432MS7-860	gloss chrome	stabilizer-bar glass-wall	1/1
8432MS10-860*	matt chrome	adjustable from 780–940 mm	
8432MSPVD22-860*	stainless steel optic		
8432MS7-990	gloss chrome	stabilizer-bar glass-wall	1/1
8432MS10-990*	matt chrome	adjustable from 910–1070 mm	
8432MSPVD22-990*	stainless steel optic		
8432MS7-1050	gloss chrome	stabilizer-bar glass-wall	1/1
8432MS10-1050*	matt chrome	adjustable from 970-1130 mm	
8432MSPVD22-1050*	stainless steel optic		
8432MS7-1190	gloss chrome	stabilizer-bar glass-wall	1/1
8432MS10-1190*	matt chrome	adjustable from 1110-1270 mm	
8432MSPVD22-1190*	stainless steel optic		
8432MS7-1330	gloss chrome	stabilizer-bar glass-wall	1/1
8432MS10-1330*	matt chrome	adjustable from 1250-1410 mm **	
8432MSPVD22-1330*	stainless steel optic		
8432MS7-1460	gloss chrome	stabilizer-bar glass-wall	1/1
8432MS10-1460*	matt chrome	adjustable from 1380-1540 mm **	
8432MSPVD22-1460*	stainless steel optic		
8432MS7-1590	gloss chrome	stabilizer-bar glass-wall	1/1
8432MS10-1590*	matt chrome	adjustable from 1510-1670 mm **	
8432MSPVD22-1590*	stainless steel optic		
8432MS7-1720	gloss chrome	stabilizer-bar glass-wall	1/1
8432MS10-1720*	matt chrome	adjustable from 1640-1800 mm **	
8432MSPVD22-1720*	stainless steel optic		
8432MS7-1850	gloss chrome	stabilizer-bar glass-wall	1/1
8432MS10-1850*	matt chrome	adjustable from 1770-1930 mm **	
8432MSPVD22-1850*	stainless steel optic		



*article discontinued

**tube subdivided (visible parting line), other length upon request!

glass thickness: 8-10 mm
adjustable due to right-left thread inside the rail.





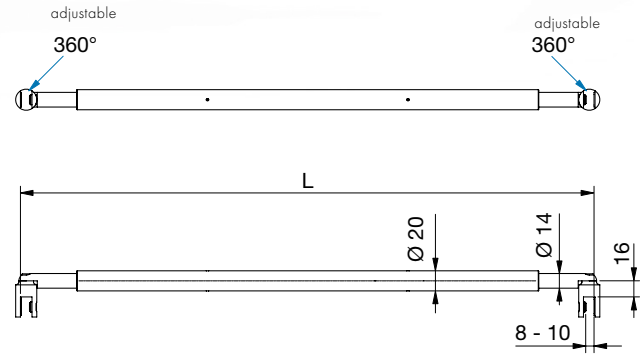

article no.	finish	article description	pu/pc.
8434MS7-375	gloss chrome	stabilizer-bar glass-glass	1/1
8434MS10-375*	matt chrome	adjustable from 345–405 mm	
8434MSPVD22-375*	stainless steel optic		
8434MS7-570	gloss chrome	stabilizer-bar glass-glass	1/1
8434MS10-570*	matt chrome	adjustable from 490–650 mm	
8434MSPVD22-570*	stainless steel optic		
8434MS7-710	gloss chrome	stabilizer-bar glass-glass	1/1
8434MS10-710*	matt chrome	adjustable from 630–790 mm	
8434MSPVD22-710*	stainless steel optic		
8434MS7-840	gloss chrome	stabilizer-bar glass-glass	1/1
8434MS10-840*	matt chrome	adjustable from 760–920 mm	
8434MSPVD22-840*	stainless steel optic		
8434MS7-970	gloss chrome	stabilizer-bar glass-glass	1/1
8434MS10-970*	matt chrome	adjustable from 890–1050 mm	
8434MSPVD22-970*	stainless steel optic		
8434MS7-1030	gloss chrome	stabilizer-bar glass-glass	1/1
8434MS10-1030*	matt chrome	adjustable from 950-1110 mm	
8434MSPVD22-1030*	stainless steel optic		
8434MS7-1170	gloss chrome	stabilizer-bar glass-glass	1/1
8434MS10-1170*	matt chrome	adjustable from 1090-1250 mm	
8434MSPVD22-1170*	stainless steel optic		
8434MS7-1310	gloss chrome	stabilizer-bar glass-glass	1/1
8434MS10-1310*	matt chrome	adjustable from 1230-1390 mm **	
8434MSPVD22-1310*	stainless steel optic		
8434MS7-1440	gloss chrome	stabilizer-bar glass-glass	1/1
8434MS10-1440*	matt chrome	adjustable from 1360-1520 mm **	
8434MSPVD22-1440*	stainless steel optic		
8434MS7-1570	gloss chrome	stabilizer-bar glass-glass	1/1
8434MS10-1570*	matt chrome	adjustable from 1490-1650 mm **	
8434MSPVD22-1570*	stainless steel optic		
8434MS7-1700	gloss chrome	stabilizer-bar glass-glass	1/1
8434MS10-1700*	matt chrome	adjustable from 1620-1780 mm **	
8434MSPVD22-1700*	stainless steel optic		
8434MS7-1830	gloss chrome	stabilizer-bar glass-glass	1/1
8434MS10-1830*	matt chrome	adjustable from 1750-1910 mm **	
8434MSPVD22-1830*	stainless steel optic		



*article discontinued

**tube subdivided (visible parting line), other length upon request!

glass thickness: 8-10 mm

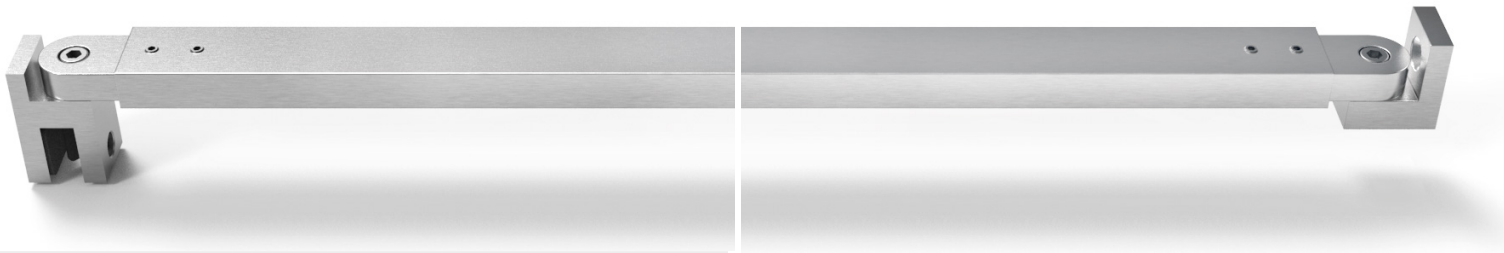

article no.	finish	article description	pu/pc.
8474MS7-380	gloss chrome	stabilizer-bar glass-wall	1/1
8474MSPVD22-380	stainless steel optic	adjustable from 300-460 mm	
8474MS7-510	gloss chrome	stabilizer-bar glass-wall	1/1
8474MSPVD22-510	stainless steel optic	adjustable from 430-590 mm	
8474MS7-640	gloss chrome	stabilizer-bar glass-wall	1/1
8474MSPVD22-640	stainless steel optic	adjustable from 560-720 mm	
8474MS7-770	gloss chrome	stabilizer-bar glass-wall	1/1
8474MSPVD22-770	stainless steel optic	adjustable from 690-850 mm	
8474MS7-900	gloss chrome	stabilizer-bar glass-wall	1/1
8474MSPVD22-900	stainless steel optic	adjustable from 820-980 mm	
8474MS7-1030	gloss chrome	stabilizer-bar glass-wall	1/1
8474MSPVD22-1030	stainless steel optic	adjustable from 950-1110 mm	
8474MS7-1160	gloss chrome	stabilizer-bar glass-wall	1/1
8474MSPVD22-1160	stainless steel optic	adjustable from 1080-1240 mm	
8474MS7-1260	gloss chrome	stabilizer-bar glass-wall	1/1
8474MSPVD22-1260	stainless steel optic	adjustable from 1180-1340 mm	
8474MS7-1390	gloss chrome	stabilizer-bar glass-wall	1/1
8474MSPVD22-1390	stainless steel optic	adjustable from 1310-1470 mm	
8474MS7-1520	gloss chrome	stabilizer-bar glass-wall	1/1
8474MSPVD22-1520	stainless steel optic	adjustable from 1440-1600 mm	
8474MS7-1650	gloss chrome	stabilizer-bar glass-wall	1/1
8474MSPVD22-1650	stainless steel optic	adjustable from 1570-1730 mm	
8474MS7-1780	gloss chrome	stabilizer-bar glass-wall	1/1
8474MSPVD22-1780	stainless steel optic	adjustable from 1700-1860 mm	
8474MS7-1910	gloss chrome	stabilizer-bar glass-wall	1/1
8474MSPVD22-1910	stainless steel optic	adjustable from 1830-1990 mm	

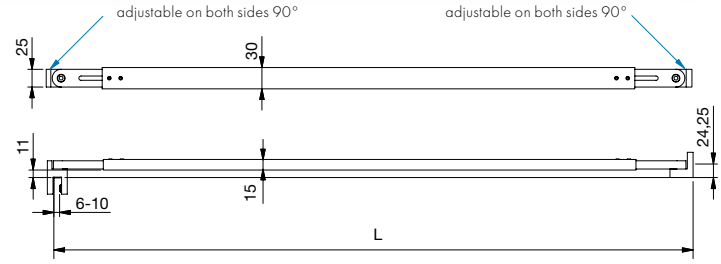



other length upon request!

**tube subdivided (visible parting line)

glass thickness: 8-10 mm

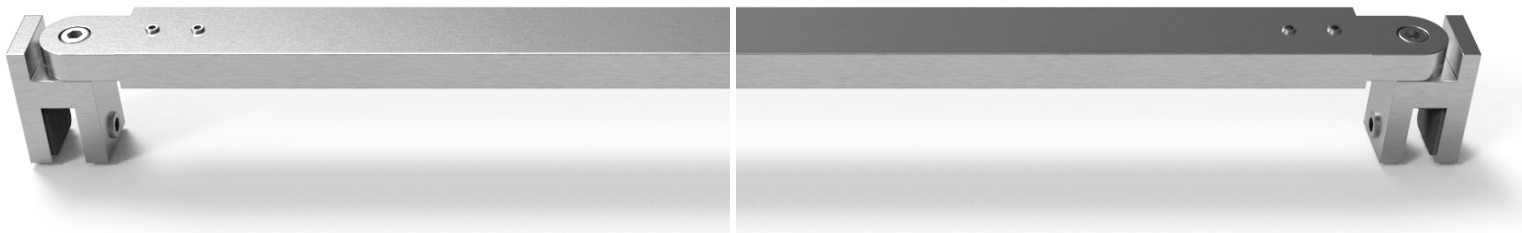

article no.	finish	article description	pu/pc.
8475MS7-370	gloss chrome	stabilizer-bar glass-glass	1/1
8475MSPVD22-370	stainless steel optic	adjustable from 290-450 mm	
8475MS7-500	gloss chrome	stabilizer-bar glass-glass	1/1
8475MSPVD22-500	stainless steel optic	adjustable from 420-580 mm	
8475MS7-630	gloss chrome	stabilizer-bar glass-glass	1/1
8475MSPVD22-630	stainless steel optic	adjustable from 550-710 mm	
8475MS7-760	gloss chrome	stabilizer-bar glass-glass	1/1
8475MSPVD22-760	stainless steel optic	adjustable from 680-840 mm	
8475MS7-890	gloss chrome	stabilizer-bar glass-glass	1/1
8475MSPVD22-890	stainless steel optic	adjustable from 810-970 mm	
8475MS7-1020	gloss chrome	stabilizer-bar glass-glass	1/1
8475MSPVD22-1020	stainless steel optic	adjustable from 940-1100 mm	
8475MS7-1150	gloss chrome	stabilizer-bar glass-glass	1/1
8475MSPVD22-1150	stainless steel optic	adjustable from 1070-1230 mm	
8475MS7-1250	gloss chrome	stabilizer-bar glass-glass	1/1
8475MSPVD22-1250	stainless steel optic	adjustable from 1170-1330 mm	
8475MS7-1380	gloss chrome	stabilizer-bar glass-glass	1/1
8475MSPVD22-1380	stainless steel optic	adjustable from 1300-1460 mm	
8475MS7-1510	gloss chrome	stabilizer-bar glass-glass	1/1
8475MSPVD22-1510	stainless steel optic	adjustable from 1430-1590 mm	
8475MS7-1640	gloss chrome	stabilizer-bar glass-glass	1/1
8475MSPVD22-1640	stainless steel optic	adjustable from 1560-1720 mm	
8475MS7-1770	gloss chrome	stabilizer-bar glass-glass	1/1
8475MSPVD22-1770	stainless steel optic	adjustable from 1690-1850 mm	
8475MS7-1900	gloss chrome	stabilizer-bar glass-glass	1/1
8475MSPVD22-1900	stainless steel optic	adjustable from 1820-1980 mm	

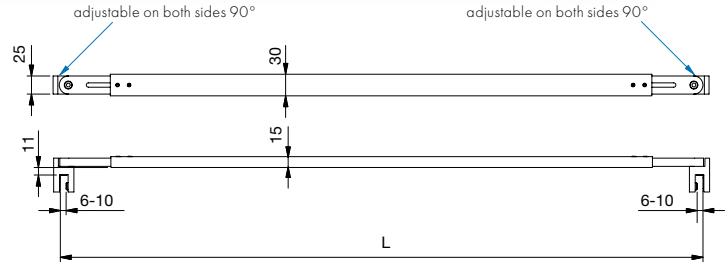



other length upon request!
**tube subdivided (visible parting line)

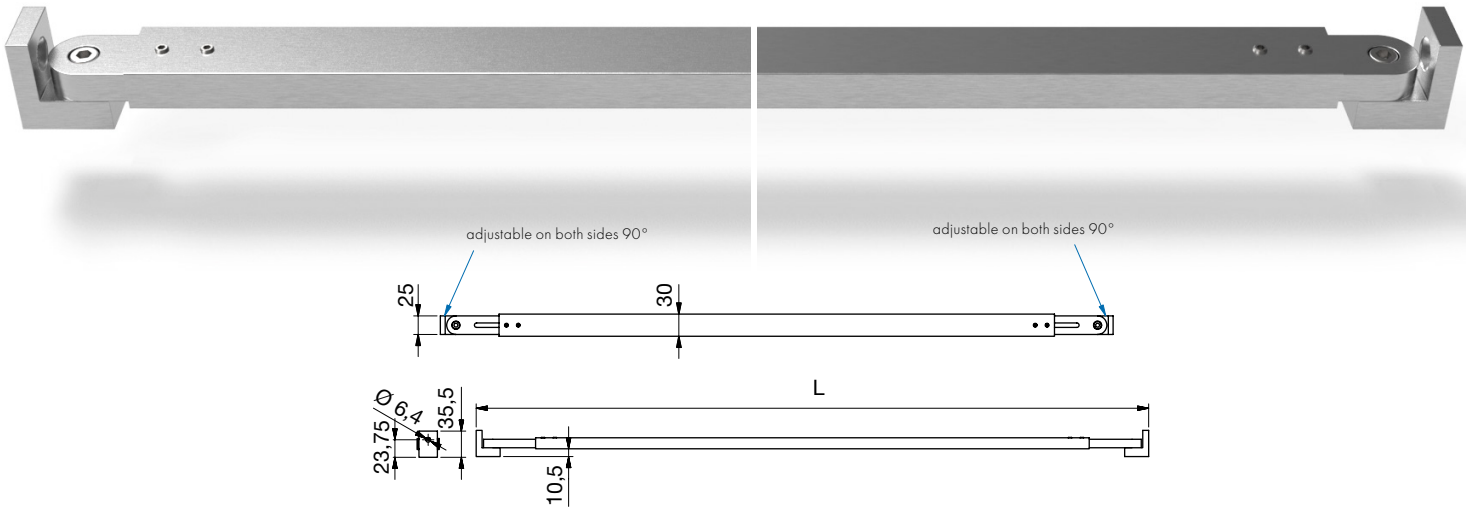

article no.	finish	article description	pu/pc.
8477MS7-910	gloss chrome	stabilizer-bar wall-wall	1/1
8477MSPVD22-910	stainless steel optic	adjustable from 830-990 mm	
8477MS7-1040	gloss chrome	stabilizer-bar wall-wall	1/1
8477MSPVD22-1040	stainless steel optic	adjustable from 960-1120 mm	
8477MS7-1170	gloss chrome	stabilizer-bar wall-wall	1/1
8477MSPVD22-1170	stainless steel optic	adjustable from 1090-1250 mm	
8477MS7-1270	gloss chrome	stabilizer-bar wall-wall	1/1
8477MSPVD22-1270	stainless steel optic	adjustable from 1190-1350 mm **	
8477MS7-1400	gloss chrome	stabilizer-bar wall-wall	1/1
8477MSPVD22-1400	stainless steel optic	adjustable from 1320-1480 mm **	
8477MS7-1530	gloss chrome	stabilizer-bar wall-wall	1/1
8477MSPVD22-1530	stainless steel optic	adjustable from 1450-1610 mm **	
8477MS7-1660	gloss chrome	stabilizer-bar wall-wall	1/1
8477MSPVD22-1660	stainless steel optic	adjustable from 1580-1740 mm **	
8477MS7-1790	gloss chrome	stabilizer-bar wall-wall	1/1
8477MSPVD22-1790	stainless steel optic	adjustable from 1710-1870 mm **	
8477MS7-1920	gloss chrome	stabilizer-bar wall-wall	1/1
8477MSPVD22-1920	stainless steel optic	adjustable from 1840-2000 mm **	



other length upon request!
**tube subdivided (visible parting line)



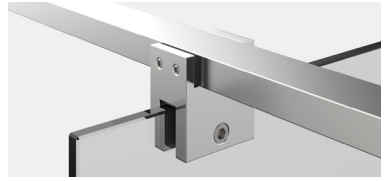

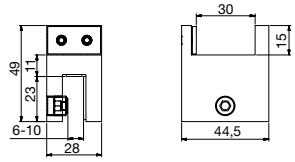

article no.	finish	glass thickness	article description	pu/pcs
8473MS7	gloss chrome	6-10 mm	glass plate support for 8474MS, 8475MS and 8477MS	1/1
8473MSPVD22	stainless steel optic			



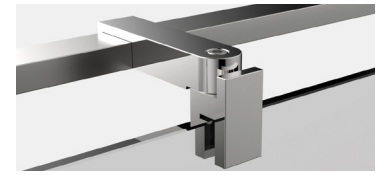

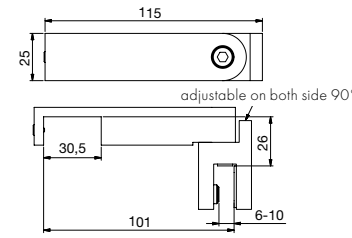

article no.	finish	glass thickn.	article description	pu/pcs
8476MS7-T	gloss chrome	6-10 mm	t-adapter for 8474MS, 8475MS and 8477MS	1/1
8476MSPVD22-T	stainless steel optic			



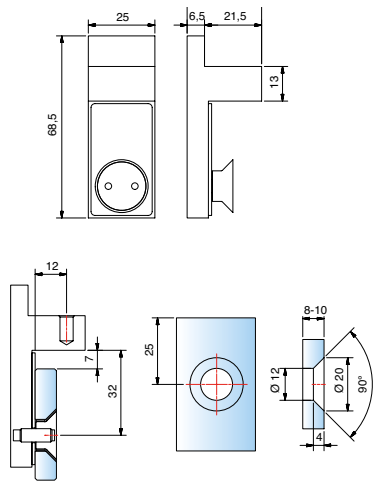

article no.	finish	glass thickn.	article description	pu/pcs
8471MS7-T	gloss chrome	6-10 mm	fixing set flush for 8474MS, 8475MS and 8477MS, extended, suitable for lifting hardware	1/1
8471MSPVD22-T	stainless steel optic			

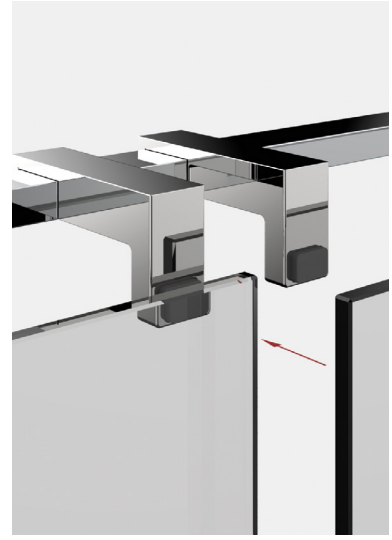

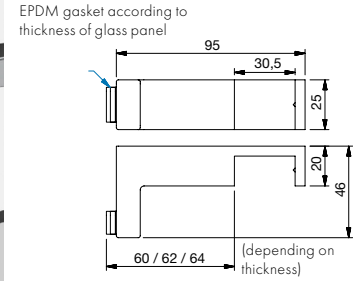

article no.	finish	glass thickn.	article description	pu/pcs
8491MS7	gloss chrome	6-10 mm	t-adapter striker bracket for 8474MS, 8475MS and 8477MS (door stop)	1/1
8491MSPVD22	stainless steel optic			

accessories - stabilizing shower shelf



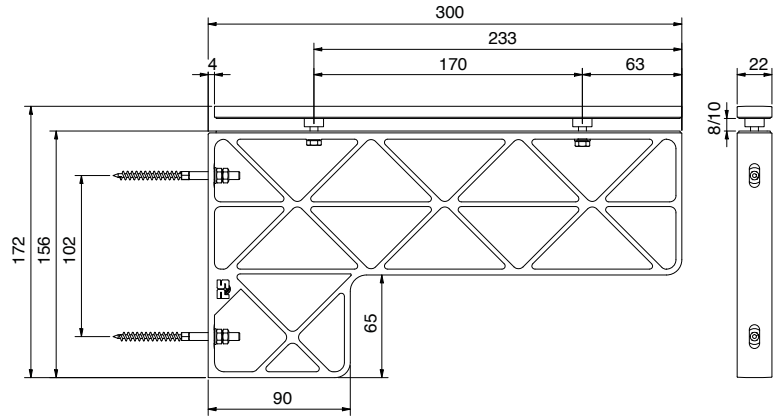

article no.	finish	glass thickness	description	pu/piece
8209ZN5	gloss chrome	8/10 mm	shower shelf, glass-wall 90° fixed	1/1
8209ZN1	matt chrome			
8209ZNPVD22	stainless steel optic			
8209ZNPVD20	gold optic			
8209ZNPVD35	black matt			
8209ZN35	black matt RAL 9005			

accessories

dimension insert plate*
(insert not included in the scope of delivery)

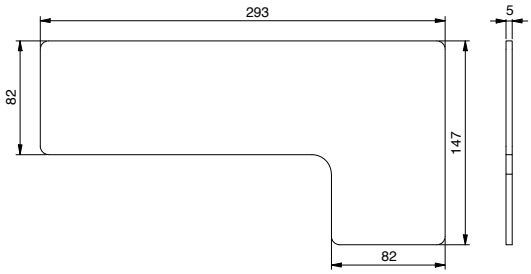

glass processing of side panel

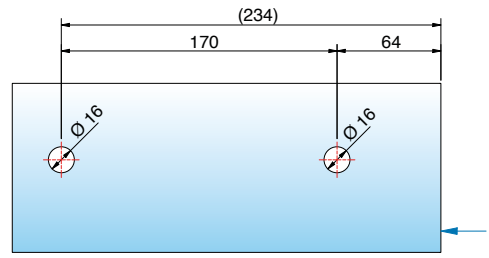

wall processing (for glass back walls, glass drilling Ø10 mm)

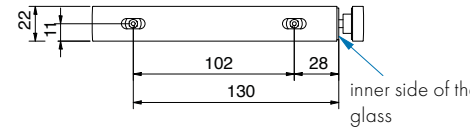

Inlay in white article no. 8209-4HI-W can be ordered optionally



other design ideas for the inserts

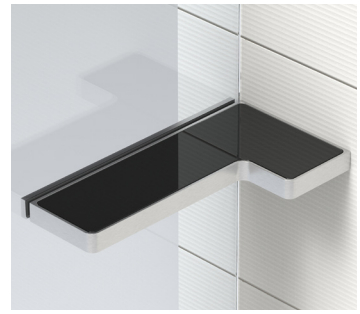





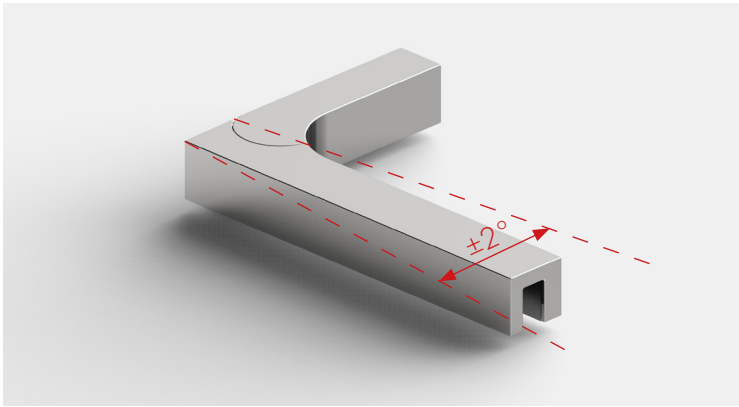

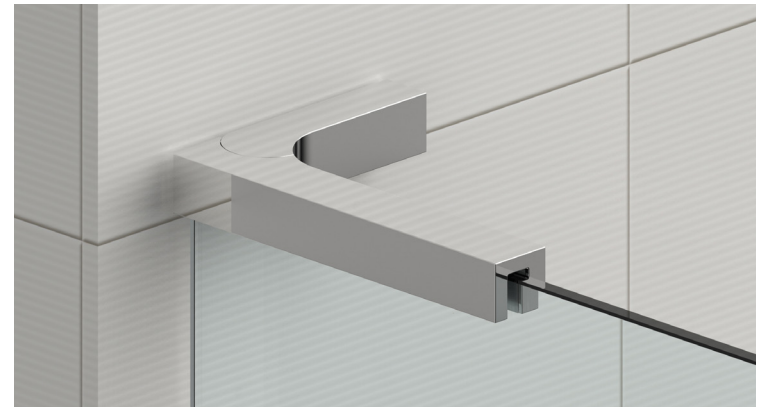

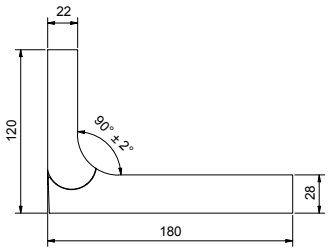

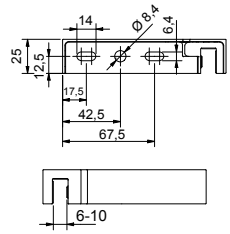

article no.	finish	glass thickn.	description	pu/pcs
8439ZN5L-180	gloss chrome	6/8/10 mm	stabilizer angle bracket left adjustable 90° ± 2°	1/1
8439ZN1L-180	matt chrome			
8439ZN10L-180	gloss nickel			
8439ZNPVD22L-180	stainless steel optic			
8439ZNPVD20L-180	gold optic			
8439ZNPVD35L-180	black matt			
8439ZN35L-180	black matt RAL 9005			

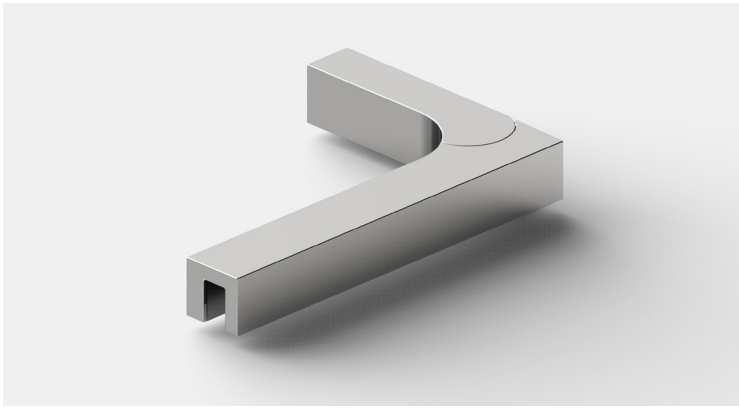

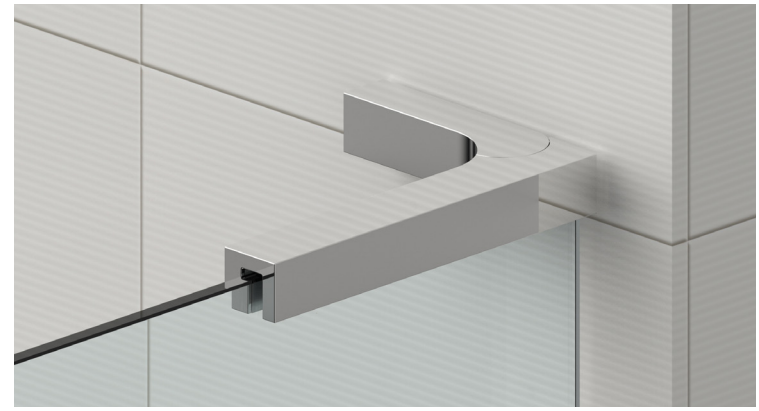

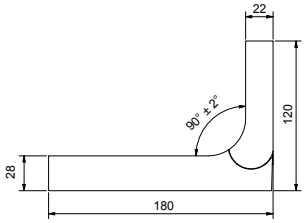

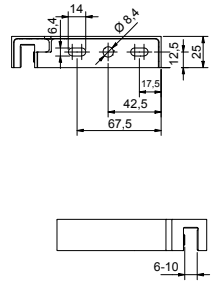

article no.	finish	glass thickn.	description	pu/pcs
8439ZN5R -180	gloss chrome	6/8/10 mm	stabilizer angle bracket right adjustable 90° ± 2°	1/1
8439ZN1R-180	matt chrome			
8439ZN10R-180	gloss nickel			
8439ZNPVD22R-180	stainless steel optic			
8439ZNPVD20R-180	gold optic			
8439ZNPVD35R-180	black matt			
8439ZN35R-180	black matt RAL 9005			

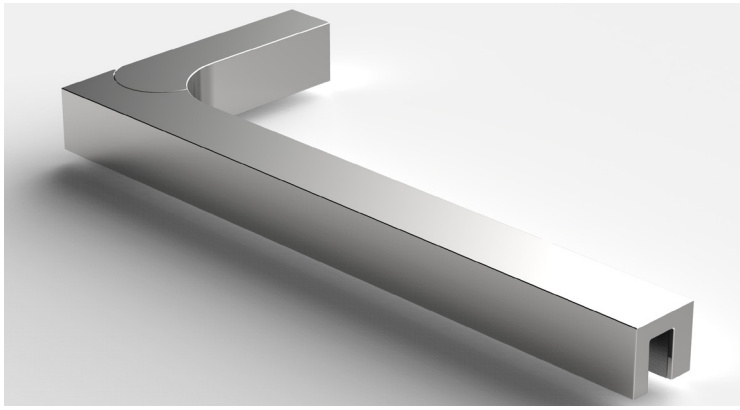

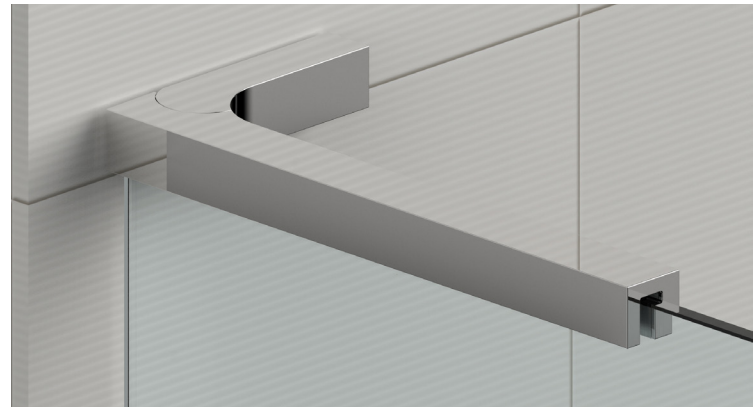

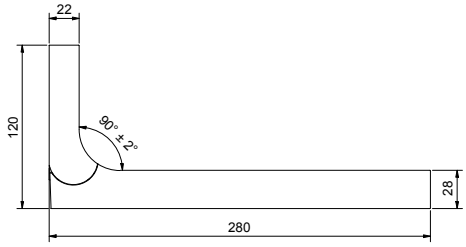

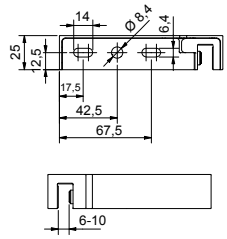

article no.	finish	glass thickn.	description	pu/pcs
8439ZN5L-280	gloss chrome	6/8/10 mm	stabilizer angle bracket left adjustable 90° ± 2°	1/1
8439ZN1L-280	matt chrome			
8439ZN10L-280	gloss nickel			
8439ZNPVD22L-280	stainless steel optic			
8439ZNPVD20L-280	gold optic			
8439ZNPVD35L-280	black matt			
8439ZN35L-280	black matt RAL 9005			

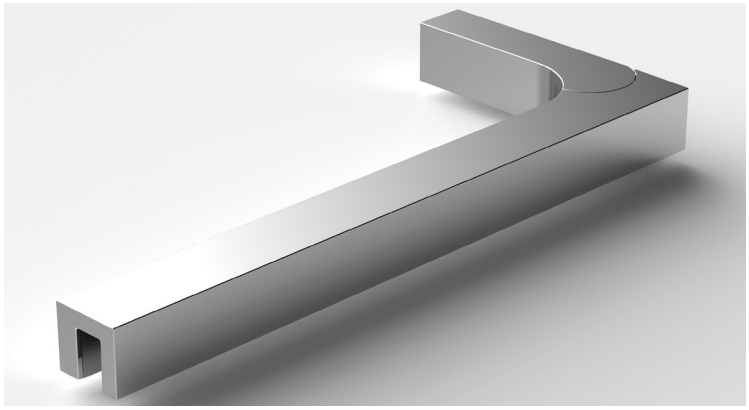

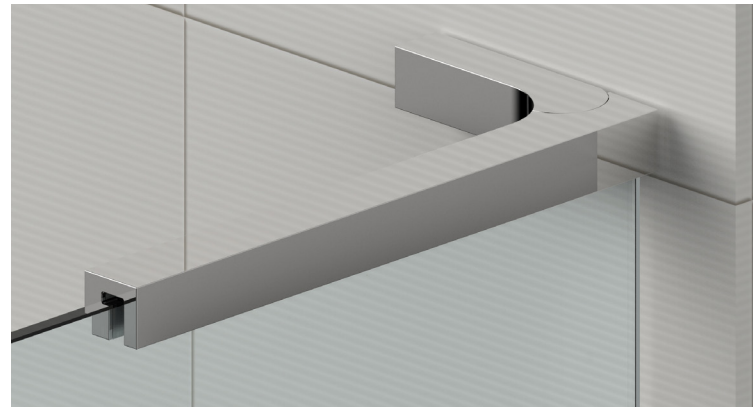

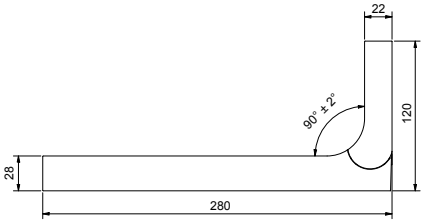

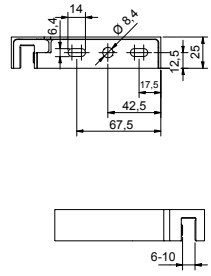

article no.	finish	glass thickn.	description	pu/pcs
8439ZN5R-280	gloss chrome	6/8/10 mm	stabilizer angle bracket right adjustable 90° ± 2°	1/1
8439ZN1R-280	matt chrome			
8439ZN10R-280	gloss nickel			
8439ZNPVD22R-280	stainless steel optic			
8439ZNPVD20R-280	gold optic			
8439ZNPVD35R-280	black matt			
8439ZN35R-280	black matt RAL 9005			



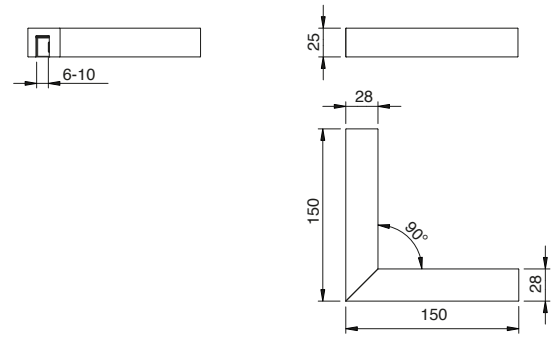

article no.	finish	glass thickness	description	pu/piece
8438ZN5 -150	gloss chrome	6/8/10 mm	stabilizer angle bracket, glass-glass	1/1
8438ZN1-150	matt chrome			
8438ZN10-150	gloss nickel			
8438ZNPVD22-150	stainless steel optic			
8438ZNPVD20-150	gold optic			
8438ZNPVD35-150	black matt			
8438ZN35-150	black matt RAL 9005			

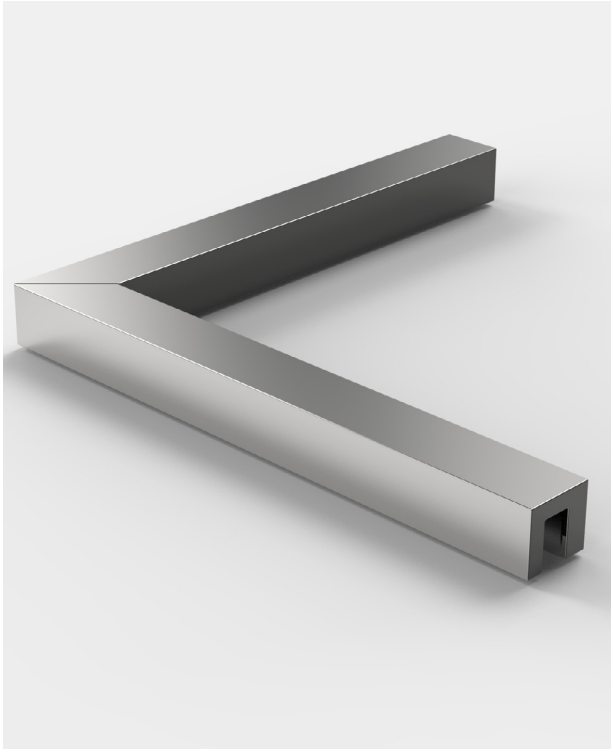

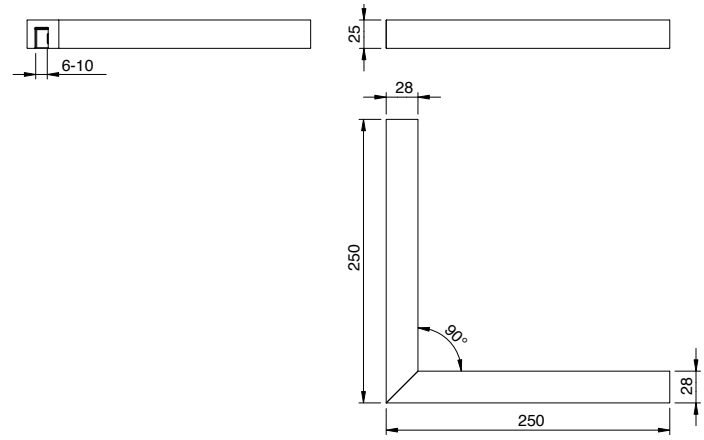

article no.	finish	glass thickness	description	pu/piece
8438ZN5 -250	gloss chrome	6/8/10 mm	stabilizer angle bracket, glass-glass	1/1
8438ZN1-250	matt chrome			
8438ZN10-250	gloss nickel			
8438ZNPVD22-250	stainless steel optic			
8438ZNPVD20-250	gold optic			
8438ZNPVD35-250	black matt			
8438ZN35-250	black matt RAL 9005			





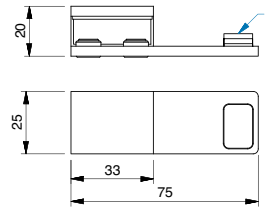

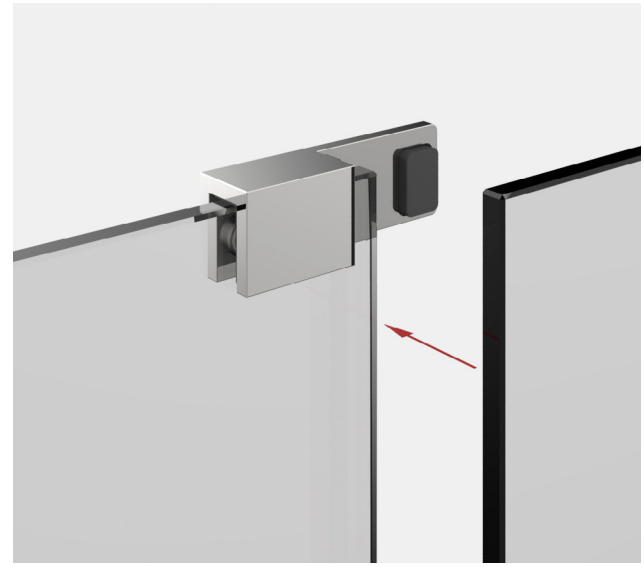

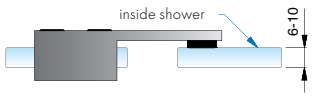

article no.	finish	glass thickness	article description	features	pu/pieces
8490MS7-L	gloss chrome	6-10 mm	door stop limiter	mounted on glass edge	1/2
8490MS10-L	matt chrome		version left (door stop)	no glass processing	
8490MSPVD22-L	stainless steel optic				
8490MSPVD35-L*	black matt				
8490MS135-L	deep black matt				



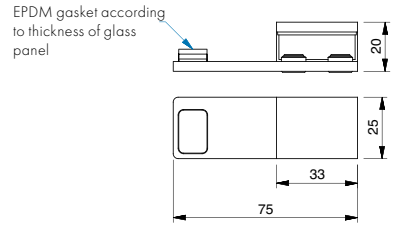

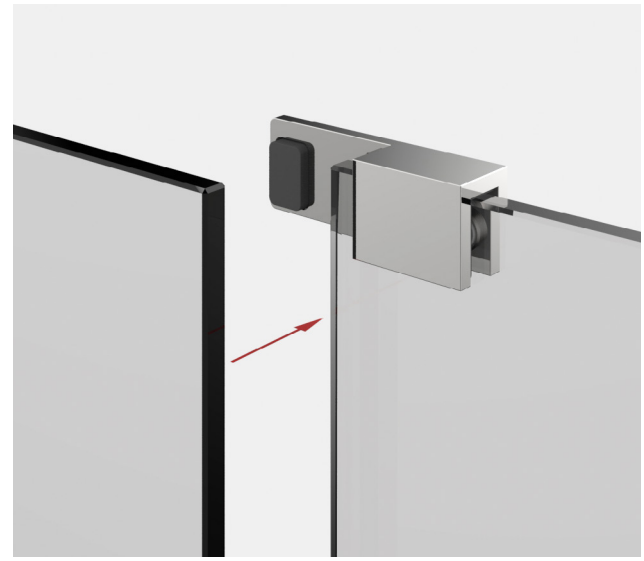

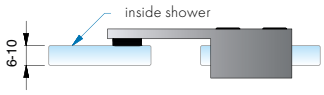

article no.	finish	glass thickness	article description	features	pu/pieces
8490MS7-R	gloss chrome	6-10 mm	door stop limiter	mounted on glass edge	1/2
8490MS10-R	matt chrome		version right (door stop)	no glass processing	
8490MSPVD22-R	stainless steel optic				
8490MSPVD35-R*	black matt				
8490MS135-R	deep black matt				

*article discontinued



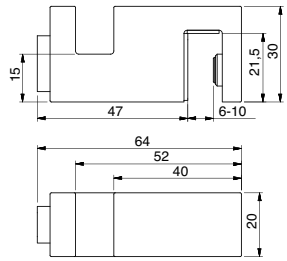

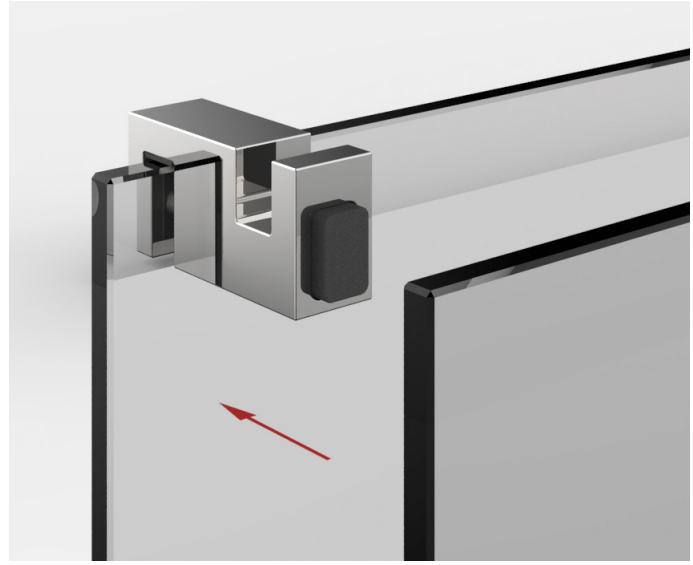

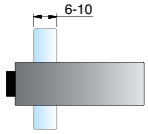

article no.	finish	glass thickness	article description	features	pu/pieces
8499MS7	gloss chrome	6-10 mm	door stop limiter	mounted on glass edge no glass processing	1/2

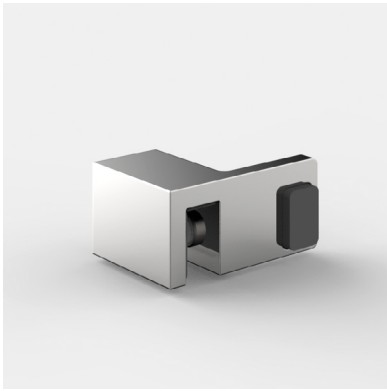

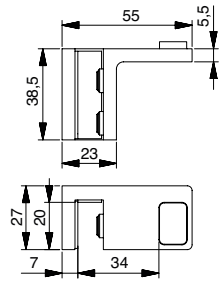

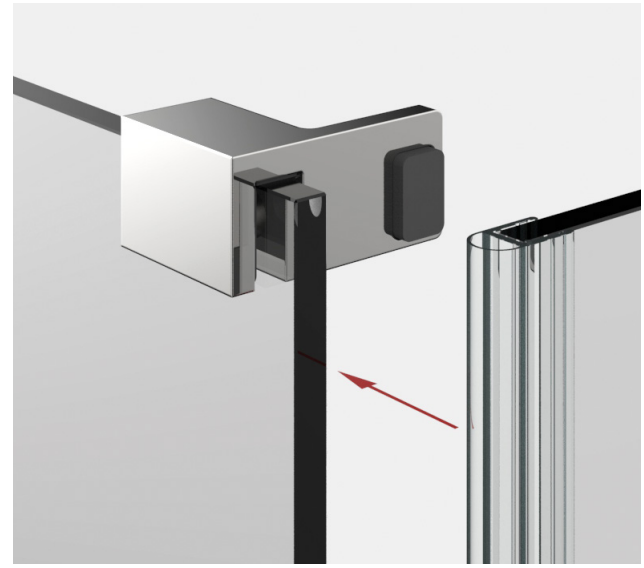

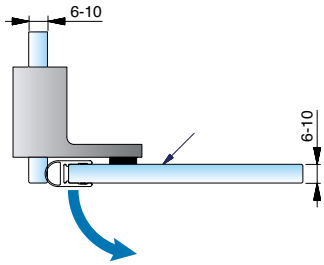

article no.	finish	glass thickness	article description	features	pu/pieces
8489MS7-L 8489MSPVD35-L* 8489MS135-L	gloss chrome black matt deep black matt	6-10 mm	door stop limiter version left	mounted on glass edge no glass processing	1/2

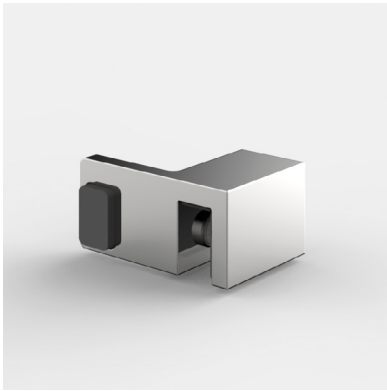

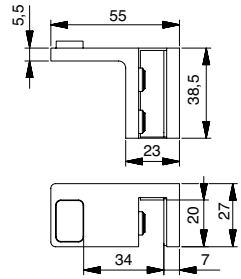

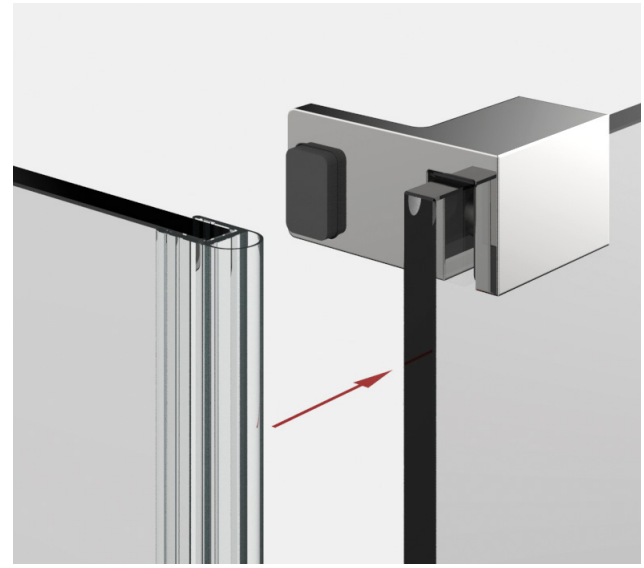

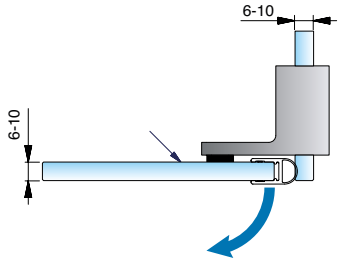

article no.	finish	glass thickness	article description	features	pu/pieces
8489MS7-R 8489MSPVD35-R* 8489MS135-R	gloss chrome black matt deep black matt	6-10 mm	door stop limiter version right	mounted on glass edge no glass processing	1/2

*article discontinued



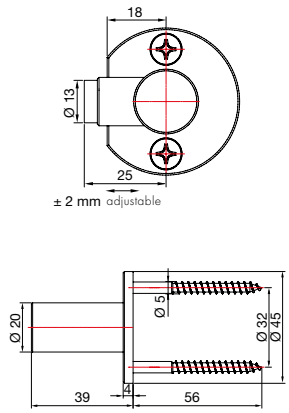



article no.	finish	article description	pu/pieces
8440MS7	gloss chrome	door stop	1/1
8440MS10	matt chrome	glass-wall	
8440MSPVD22	stainless steel optic		

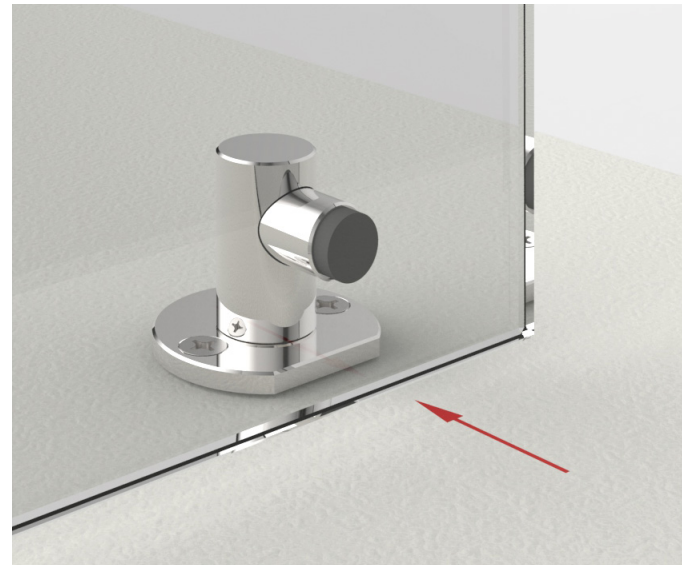



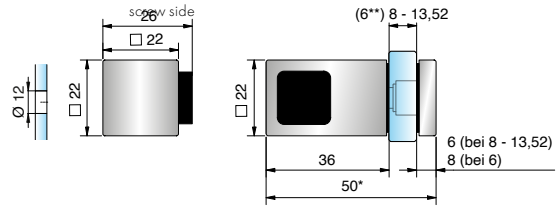

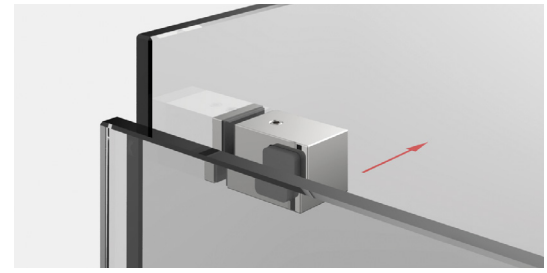

article no.	finish	glass thickness	article description	features	pu/pieces
8274ZN5-L	gloss chrome	(6**)8-13,52 mm	door stop limiter	for glass mount	1/2
8274ZN1-L	matt chrome		glass-glass, left		
8274ZNPVD22-L	stainless steel optic				
8274ZNPVD20-L	gold-optic				
8274ZN135-L	deep black matt				

**article no. 8686-7HZ replaces the HZ insert article no. 8686-5HZ when using FTG-6. 8686-7HZ must be ordered separately for FTG-6.



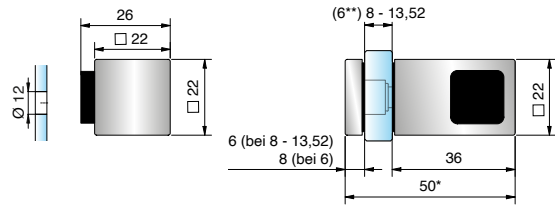

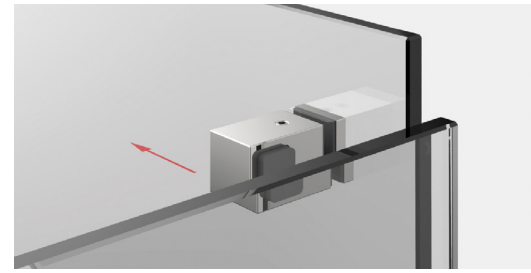

article no.	finish	glass thickness	article description	features	pu/pieces
8274ZN5-R	gloss chrome	(6**)8-13,52 mm	door stop limiter	for glass mount	1/2
8274ZN1-R	matt chrome		glass-glass, right		
8274ZNPVD22-R	stainless steel optic				
8274ZNPVD20-R	gold-optic				
8274ZN135-R	deep black matt				

**article no. 8686-7HZ replaces the HZ insert article no. 8686-5HZ when using FTG-6. 8686-7HZ must be ordered separately for FTG-6.



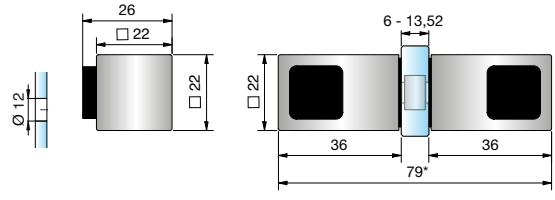

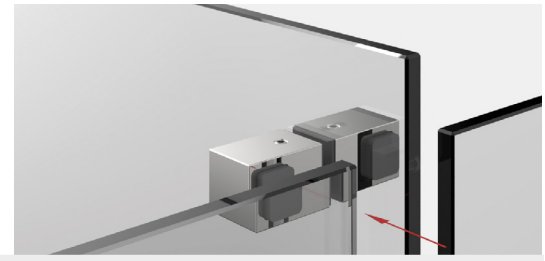

article no.	finish	glass thickness	article description	features	pu/pieces
8274ZN5-D	gloss chrome	(6**)8-13,52 mm	door stop limiter	for glass mount	1/2
8274ZN1-D	matt chrome		glass-glass,		
8274ZNPVD22-D	stainless steel optic		double-sided		
8274ZNPVD20-D	gold-optic				
8274ZN135-D	deep black matt				

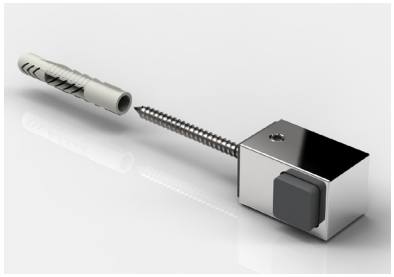

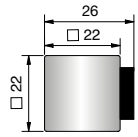

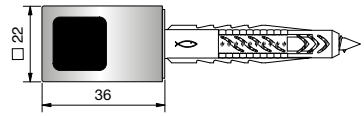

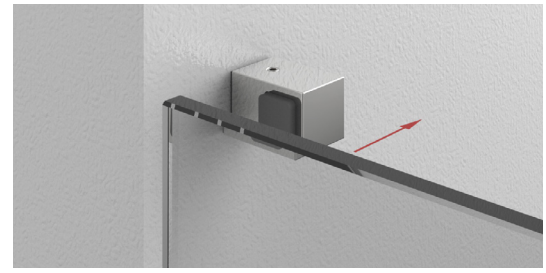

article no.	finish	article description	features	pu/pieces
8274ZN5-WL	gloss chrome	door stop limiter	for wall mount	1/2
8274ZN1-WL	matt chrome			
8274ZNPVD22-WL	stainless steel optic			
8274ZNPVD20-WL	gold-optic			
8274ZN135-WL	deep black matt			



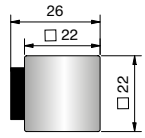

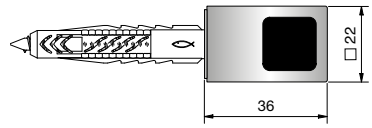

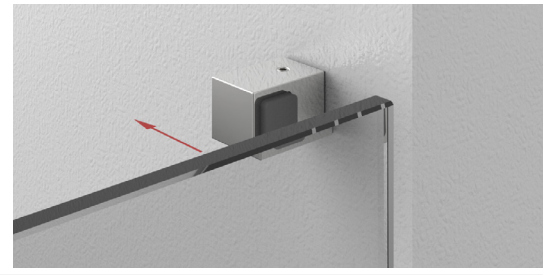

article no.	finish	article description	features	pu/pieces
8274ZN5-WR	gloss chrome	door stop limiter	for wall mount	1/2
8274ZN1-WR	matt chrome			
8274ZNPVD22-WR	stainless steel optic			
8274ZNPVD20-WR	gold-optic			
8274ZN135-WR	deep black matt			

overview sealing profiles and splash guards

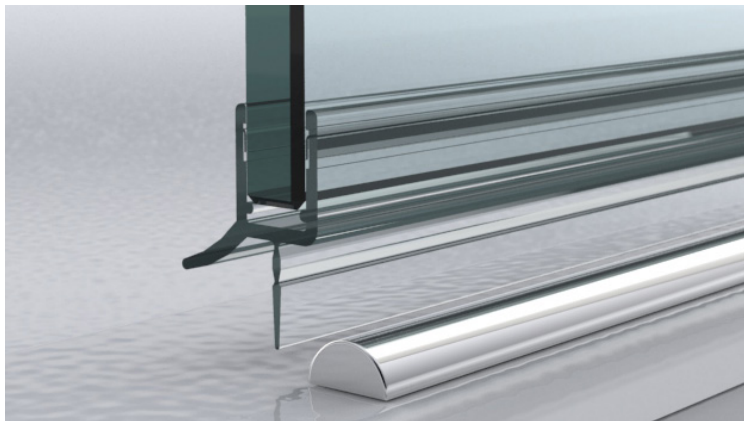

sealing profile with splash guard

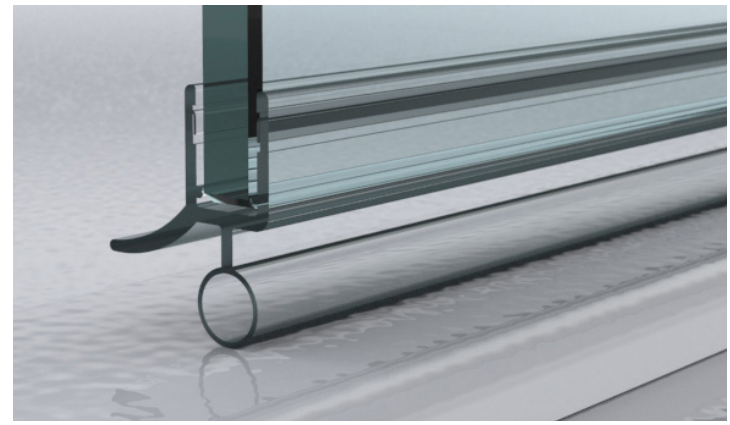

sealing profile without splash guard



sealing profile chrome design

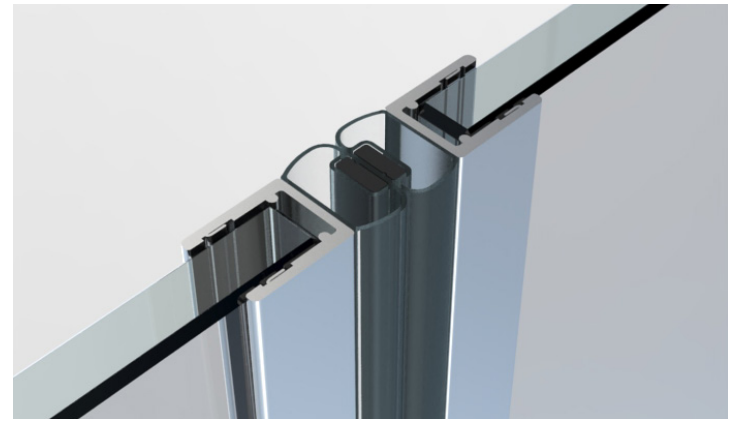

magnetical sealing profile chrome design



sealing profile glass-wall

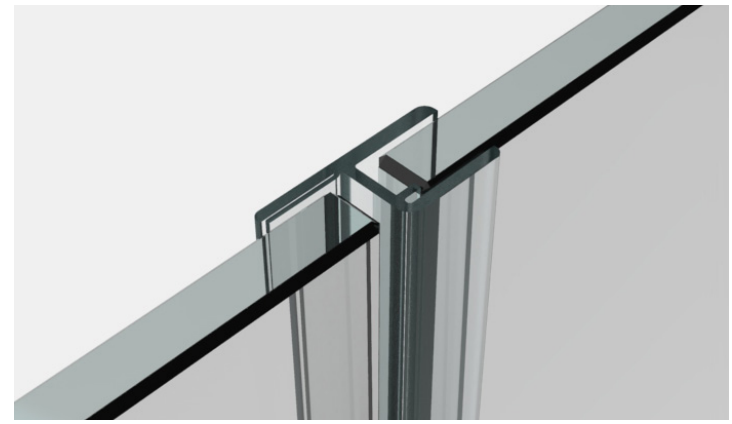

sealing profile glass-glass

overview sealing profiles and splash guards

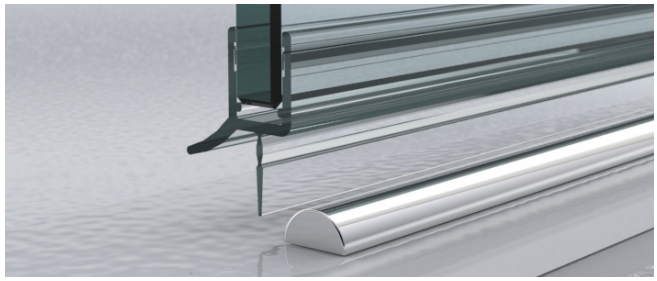

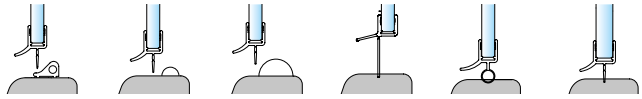

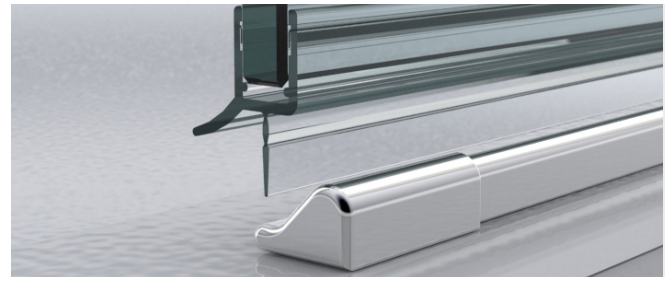

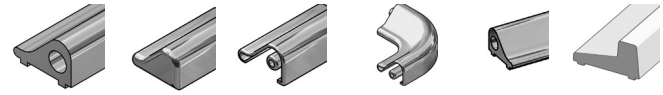

sealing profiles for shower door/wall

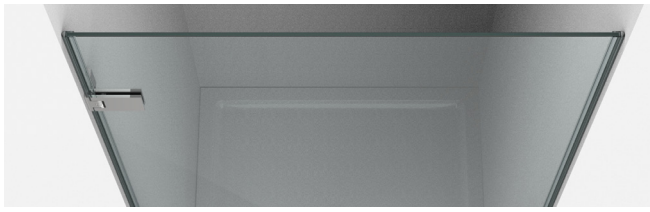

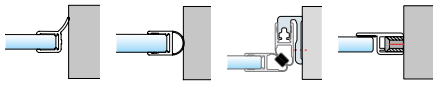

sealing profiles for glass-glass 90°



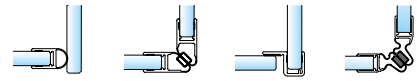

sealing profiles for glass-glass 135°

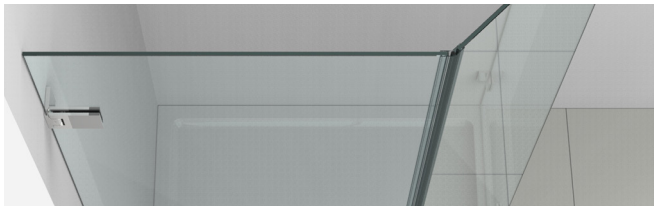

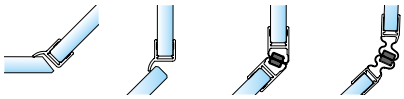

sealing profiles for glass-glass 180°

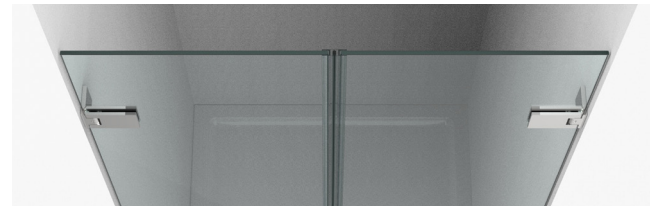



sealing profiles for glass-glass 180°, overlapping



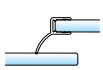

sealing profiles chrome decor



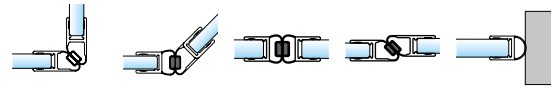

for sealing profiles for shower door/tray

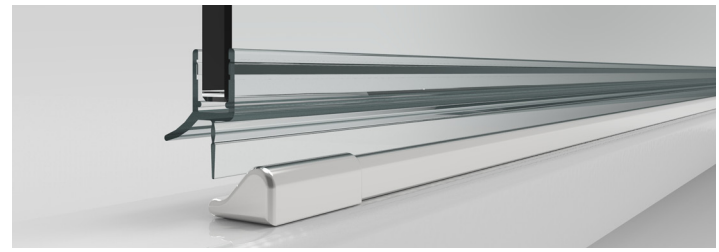

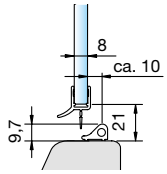

art. no. 8864KU0-8-2010
for 6 and 8 mm glass in combination with splash guard (art. no. 8535E6EV5)

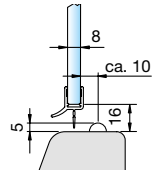

art. no. 8864KU0-8-2010
for 6 and 8 mm glass in combination with acrylic semi-circular rod (art. no. 8538KU5, radius = 5 mm)

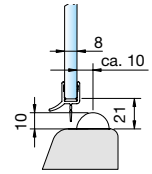

art. no. 8864KU0-8-2010
for 6 and 8 mm glass in combination with acrylic semi-circular rod (art. no. 8539KU5, radius = 10 mm)

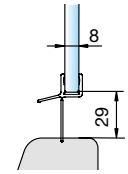

art. no. 8866KU0-8-2010
for 6 and 8 mm glass

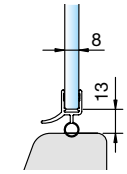

art. no. 8863KU0-8-2010
for 6 and 8 mm glass

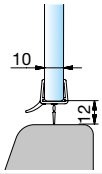

art. no. 8864KU0-12-2500
for 10 and 12 mm glass

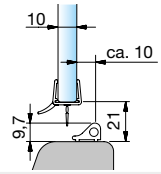

art. no. 8864KU0-12-2500
for 10 and 12 mm glass in combination with splash guard (art. no. 8535E6EV5)

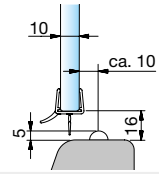

art. no. 8864KU0-12-2500
for 10 and 12 mm glass in combination with acrylic semi-circular rod (art. no. 8538KU5, radius = 5 mm)

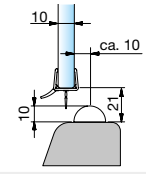

art. no. 8864KU0-12-2500
for 10 and 12 mm glass in combination with acrylic semi-circular rod (art. no. 8539KU5, radius = 10 mm)

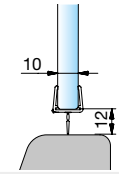

art. no. 8876KU0-12-2500
for 10 and 12 mm glass

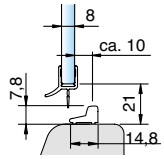

art. no. 8864KU0-8-2010
for 6 and 8 mm glass in combination with splash guard (art. no. 8585E6EV5-2010)

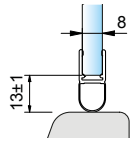

art. no. 8842KU0-8-2500
for 8 mm glas, length 2500 mm

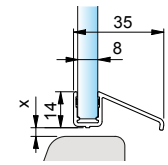

art. no. 8891KU0-8-2010
for 8 mm glass, length 2010 mm

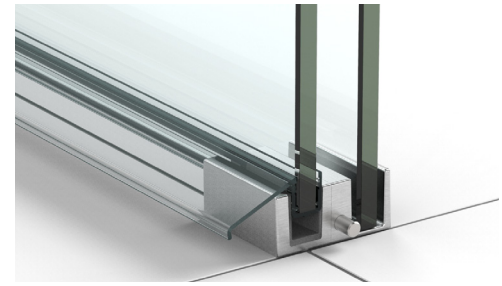

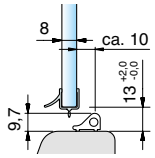

art. no. 8879KU0-8-2010
for 8 mm glass in combination with splash guard (art. no. 8535E6EV5)

attention! the profile has to be cut for the end pieces left / right and the corner connector 90°.

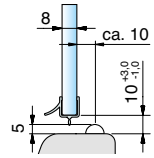

art. no. 8879KU0-8-2010
for 8 mm glass in combination with acrylic semi-circular rod (art. no. 8538KU5, radius = 5 mm)

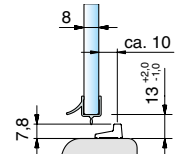

art. no. 8879KU0-8-2010
for 8 mm glass in combination with splash guard (art. no. 8585E6EV5-2010)

attention! the profile has to be cut for the 90° corner connector, all other cover caps do not fit!

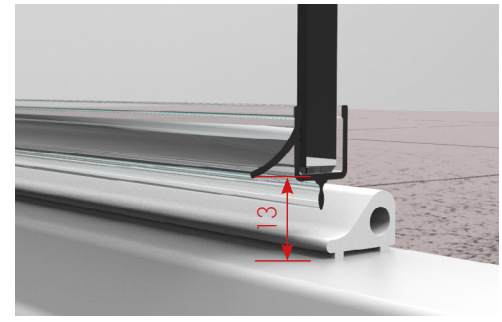

***article no. end:** E6/EV5=aluminium special etched anodised gloss chrome finish; E0/14 =aluminium white powder coated, RAL 9016; KU0 = plastic natural color opaque
Please note: the mentioned reduction measurements are only valid for 8 or 10 mm glass! Reduction measurement for 6 or 12 mm glas are available upon request.

sealing profiles for the lower shower edge, bent

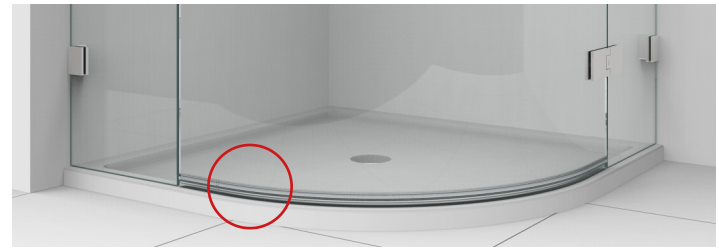

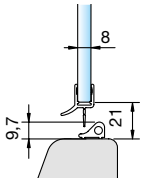

art. no. 8868KU0-8-R500
for 6 and 8 mm glass in combination with curved splash guard
for tube radius R500-550
winding off = 1194 mm
(art. no. 8881 and 8882-R500)

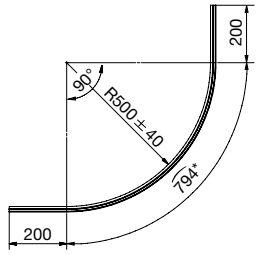

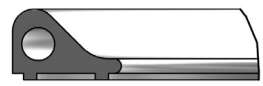

art. no. 8881E6/EV5-R500
art. no. 8882E6/EV5-R550
art. no. 8881E0/14-R500
art. no. 8882E0/14-R550

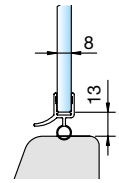

art. no. 8867KU0-8-R500
curved for tube radius
R500 - 550
for 6 and 8 mm glass
winding off = 1194 mm

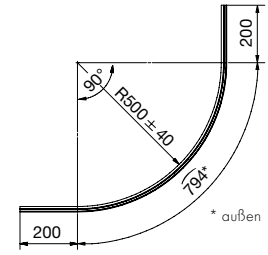

sealing profiles for glass-glass 90°



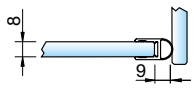

art. no. 8861KU0-8-2010
art. no. 8861KU0-8-2500
for 6 and 8 mm glass for an one sided opening shower hinge or pendelum shower hinge

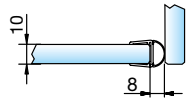

art. no. 8861KU0-12-2500
art. no. 8861KU0-12-3000
for 10 and 12 mm glass for an one sided opening shower hinge or pendelum shower hinge

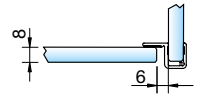

art. no. 8855KU0-8-2010
art. no. 8855KU0-8-2500
for 6 and 8 mm glass for an outward opening shower hinge

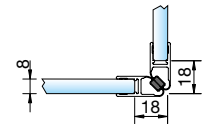

art. no. 8851KU0-8-2010
art. no. 8851KU0-8-2500
for 6 and 8 mm glass for an outward opening shower hinge

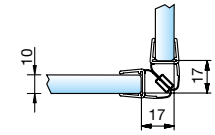

art. no. 8851KU0-12-2500
for 10 and 12 mm glass for an outward opening shower hinge

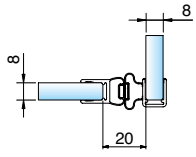

art. no. 8849KU0-8-2500
for 6 and 8 mm glass for an one sided opening shower hinge or pendelum shower hinge

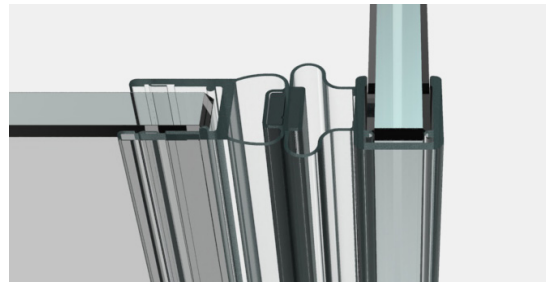

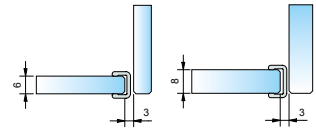

art. no. 8848KU0–6–2010
art. no.. 8848KU0–8–2500
for 6 or 8mm glass

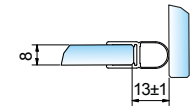

art. no. 8842KU0-8-2500
for 6 and8 mm glas,
length 2500 mm

Please note: the mentioned reduction measurements are only valid for 8 or 10 mm glass! Reduction measurement for 6 or 12 mm glas are available upon request.

sealing profiles for glass-glass 135°



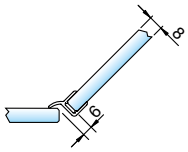

art. no. 8860KU0-8-2010
art. no. 8860KU0-8-2500
for 6 and 8 mm glass for an inward opening shower hinge

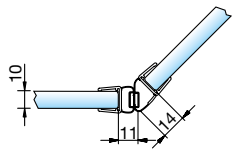

art. no. 8875KU0-12-2500
for 10 and 12 mm glass for an one sided opening shower hinge or pendelum shower hinge

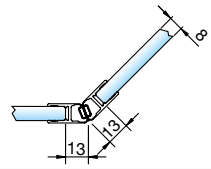

art. no. 8853KU0-8-2010
art. no. 8853KU0-8-2500
for 6 and 8 mm glass for an outward opening shower hinge

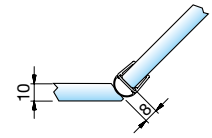

art. no. 8861KU0-12-2500
art. no. 8861KU0-12-3000
for 10 and 12 mm glass for a pendulum shower hinge

***article no. end:** KU0 = plastic natural color opaque

accessories

ealing profile for glass-glass, angle flexible

art. no. 8874KU0-8-2010
art. no. 8874KU0-8-2500
for 6 and 8 mm glass for an outward opening shower hinge

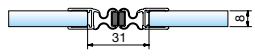

application 180°

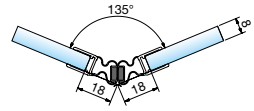

application 135°

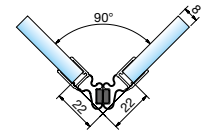

application 90°

reduction measurement 8 mm glass

installation angle	red. measurement
90°	22 mm
105°	21 mm
120°	19 mm
135°	18 mm
150°	16 mm
165°	16 mm
180°	15,5 mm

***article no. end:** E6/EV5=aluminium special etched anodised gloss chrome finish; E0/14 =aluminium white powder coated, RAL 9016; KU0 = plastic natural color opaque
Please note: the mentioned reduction measurements are only valid for 8 or 10 mm glass! Reduction measurement for 6 or 12 mm glas are available upon request.

sealing profiles for glass-glass 180°

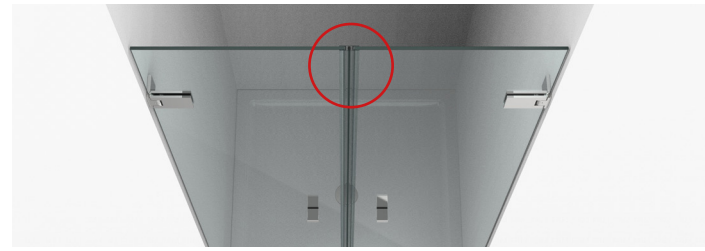

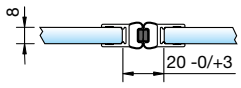

art. no. 8850KU0-8-2010
art. no. 8850KU0-8-2500
for 6 and 8 mm glass for a pendulum shower hinge

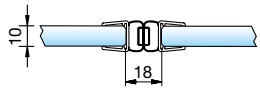

art. no. 8850KU0-12-2500
for 10 and 12 mm glass for a pendulum shower hinge

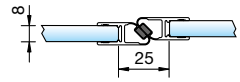

art. no. 8852KU0-8-2010
art. no. 8852KU0-8-2500
for 6 and 8 mm glass for a shower hinge opening to one side

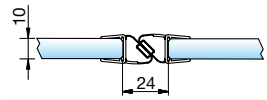

art. no. 8852KU0-12-2500
for 10 and 12 mm glass for a shower hinge opening to one side

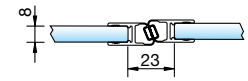

art. no. 8854KU0-8-2010
art. no. 8854KU0-8-2500
for 6 and 8 mm glass for a shower hinge opening to one side

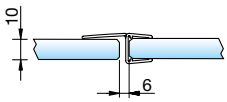

art. no. 8869KU0-12-2500
for 10 and 12 mm glass for a show-er hinge opening to one side

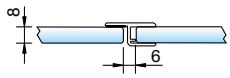

art. no. 8856KU0-8-2010
art. no. 8856KU0-8-2500
for 6 and 8 mm glass for a shower hinge opening to one side

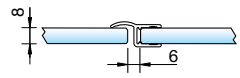

art. no. 8857KU0-8-2010
art. no. 8857KU0-8-2500
for 6 and 8 mm glass for a shower hinge opening to one side

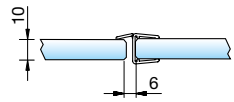

art. no. 8857KU0-12-2500
for 10 and 12 mm glass for a shower hinge opening to one side

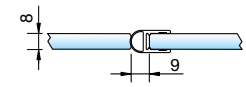

art. no. 8861KU0-8-2010
art. no. 8861KU0-8-2500
for 6 and 8 mm glass for a pendulum shower hinge

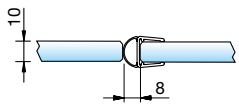

art. no. 8861KU0-12-2500
art. no. 8861KU0-12-3000
for 10 and 12 mm glass for a pendulum shower hinge

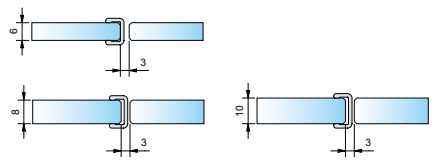

article no. 8848KU0–6–2010 **article no. 8848KU0–8–2500**
Für 6 oder 8mm Glas



art. no. 8842KU0-8-2500
for 8 mm glas, length 2500 mm

sealing profiles for glass-glass 180° overlapping

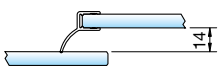

art. no. 8858KU0-8-2010
art. no. 8858KU0-8-2500
for 6 and 8 mm glass for an outward opening shower hinge



***article no. end:** KU0 = plastic natural color opaque

Please note: the mentioned reduction measurements are only valid for 8 or 10 mm glass! Reduction measurement for 6 or 12 mm glas are available upon request.

sealing profiles for door/wall 90° (hinge side)



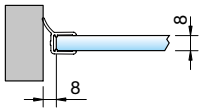

art. no. 8862KU0-8-2010
art. no. 8862KU0-8-2500
for 6 and 8 mm glass as a sealing to the wall for an outward opening shower hinge

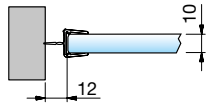

art. no. 8876KU0-12-2500
for 10 and 12 mm glass for a pendulum shower hinge

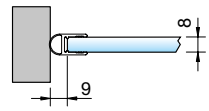

art. no. 8861KU0-8-2010
art. no. 8861KU0-8-2500
for 6 and 8 mm glass as a sealing to the wall for an inward and outward opening shower hinge

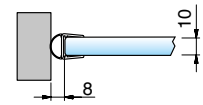

art. no. 8861KU0-12-2500
art. no. 8861KU0-12-3000
for 10 and 12 mm glass as a sealing to the wall for an inward and outward opening shower hinge

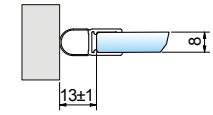

art. no. 8842KU0-8-2500
for 8 mm glas, length 2500 mm

sealing profiles for door/wall 90° (handle side)



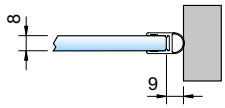

art. no. 8861KU0-8-2010
art. no. 8861KU0-8-2500
for 6 and 8 mm glass as a sealing to the wall for a pendulum shower hinge

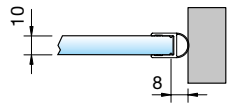

art. no. 8861KU0-12-2500
art. no. 8861KU0-12-3000
for 10 and 12 mm glass as a sealing to the wall for a pendulum shower hinge

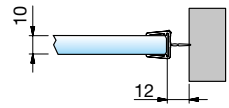

art. no. 8876KU0-12-2500
for 10 and 12 mm glass as a sealing to the wall for a pendulum shower hinge

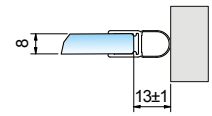

art. no. 8842KU0-8-2500
for 8 mm glas, length 2500 mm

***article no. end:** KU0 = plastic natural color opaque
Please note: the mentioned reduction measurements are only valid for 8 or 10 mm glass! Reduction measurement for 6 or 12 mm glas are available upon request.

carrier profile for door stop

art. no. 8880_*-2010
length = 2010 mm, finished see article-no.-end
art. no. 8880_*-2500
length = 2500 mm, finished see article-no.-end

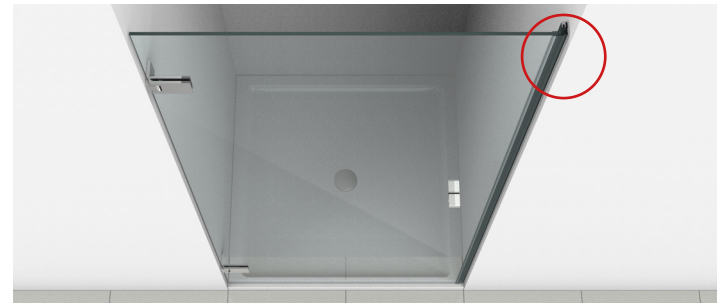

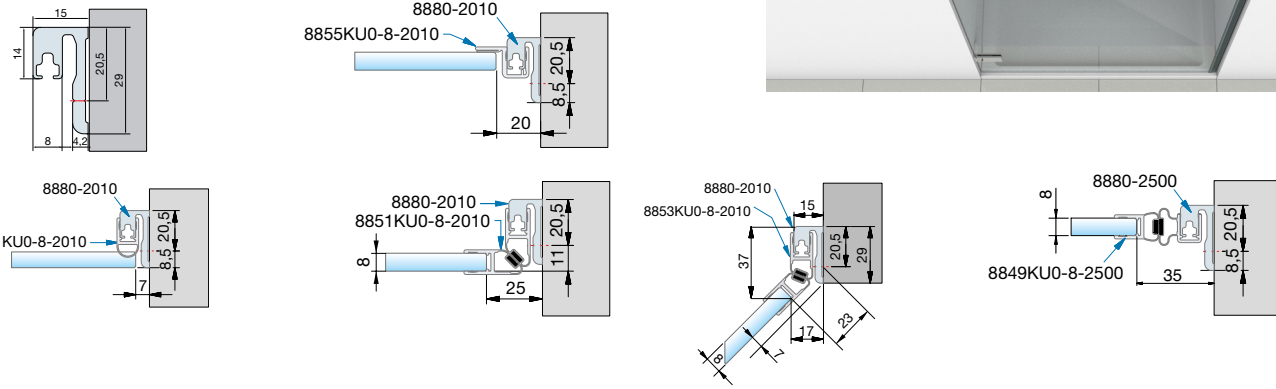

***article no. end:** E6/EV1 =aluminium special etched anodised natural color; E6/EV5=aluminium special etched anodised gloss chrome finish; E1/23 =aluminium ground anodised nickel silver (stainless steel optic); KU0 = plastic natural color opaque

carrier profile for sealing profile

bore gaps

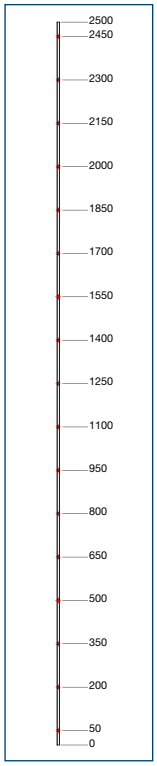

applications profile

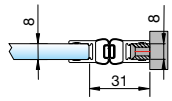

with sealing profile 8850KU-8
and carrier section 8883E6EV1-8

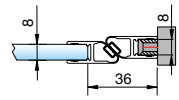

with sealing profile 8852KU-8
and carrier section 8883E6EV1-8

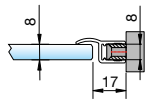

with sealing profile 8857KU-8
and carrier section 8883E6EV1-8

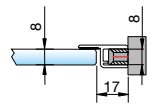

with sealing profile 8856KU-8
and carrier section 8883E6EV1-8

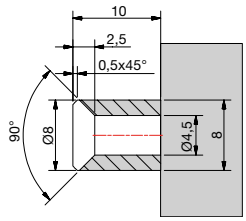

art. no. 8883E6EV1-8-2500

***article no. end:** E6EV1 =aluminium special etched anodised natural color

Please note: the mentioned reduction measurements are only valid for 8 mm glass! Reduction measurement for 6 mm glass are available upon request.



sealing profiles chrome decor



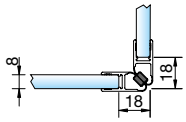

art. no. 8851KU7-8-2010
sealing profile for glass-glass 90° for 6 and 8 mm glass for a double-sided opening.

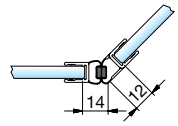

art. no. 8875KU7-8-2010
sealing profile for glass-glass 135° for 6 and 8 mm glass for a double-sided opening.

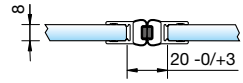

art. no. 8850KU7-8-2010
sealing profile for glass-glass 180° for 6 and 8 mm glass for a double-sided opening.

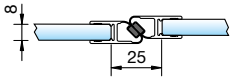

art. no. 8852KU7-8-2010
sealing profile for glass-glass 180° for 6 and 8 mm glass for a shower hinge opening to one side

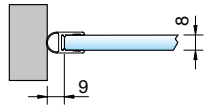

art-no. 8861KU7-8-2010
sealing profile for laterally wall-connection 90° (side of the hinge) for 6 and 8 mm glass for a double-sided opening.

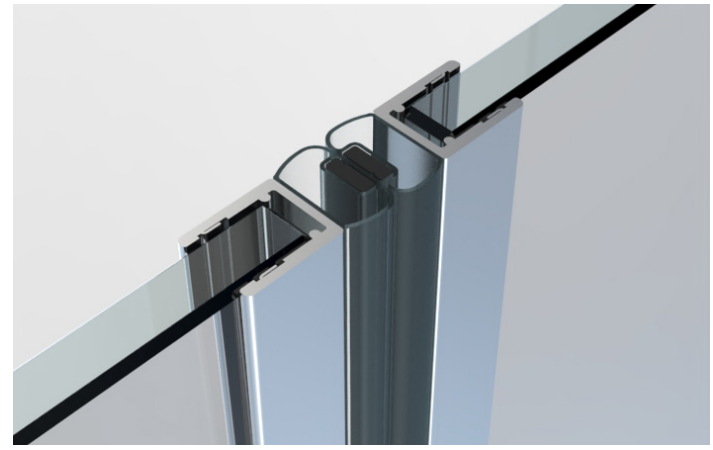

***article no. end:** KUZ=plastic gloss chrome finish

splash guards

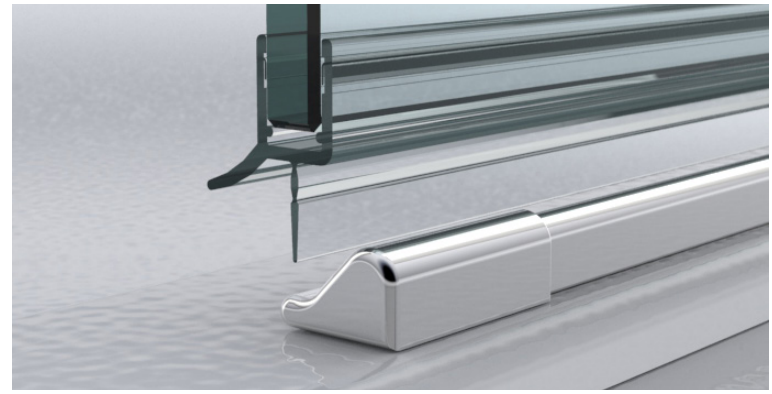

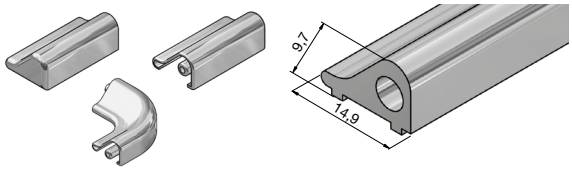

art. no. SET-8535E6EV5-1860
art. no. SET-8535E0/14-1860
splash guard with a length of 1860 mm
incl. 1x end piece left , 1x end piece right, 1x splash guard corner 90°

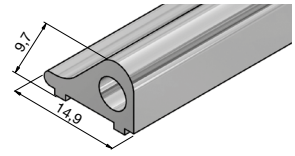

art. no. 8535E6EV5-1860
art. no. 8535E0/14-1860
splash guard with a length of 1860 mm

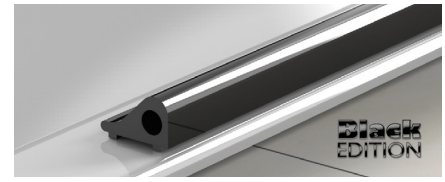

art. no. 8535E6C35-1860

splash guard with a length of 1400 mm

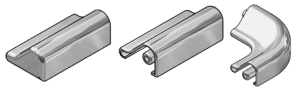

art. no. SET-8536E6/EV5-90
art. no. SET-8536E0/14-90
art. no. SET-8536KU3-90
1x end piece left , 1x end piece right, 1x
splash guard corner 90°

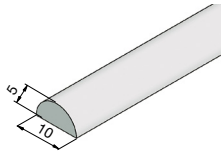

art. no. 8538KU5
splash guard with a length
of 2000 mm

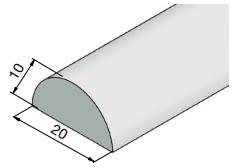

art. no. 8539KU5
splash guard with a length
of 2000 mm

***article no. end:** E6/EV5=aluminium special etched anodised gloss chrome finish; E0/14 =aluminium white powder coated, RAL 9016; KU5 = plastic chrystal clear; AL35 = black matt (RAL9005); AL36 = black gloss (RAL9005);

Please note: the mentioned reduction measurements are only valid for 8 or 10 mm glass! Reduction measurement for 6 or 12 mm glas are available upon request.

square splash guards

NEW



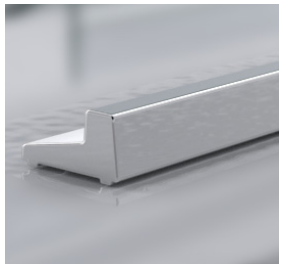

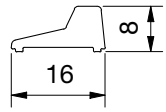

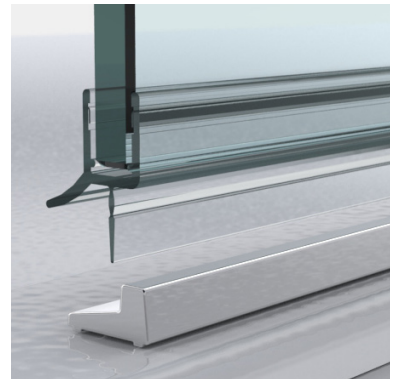



article no.	finish	article description
8585E6EV5-2010	glanzeloxiert	splash protection profile square cut length 2010 mm
8585E6C35-2010	black matt	
8585AL134-2010	white matt	

Take into account possible contact points up to 12mm at the profile ends while cutting (in case these are not covered by the end caps)

end caps and connectors

for square splash guards

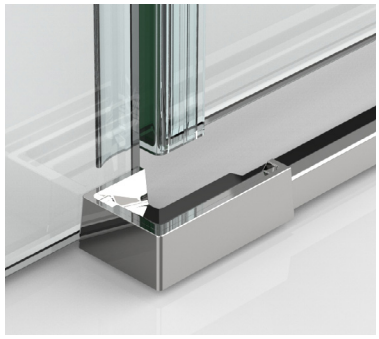

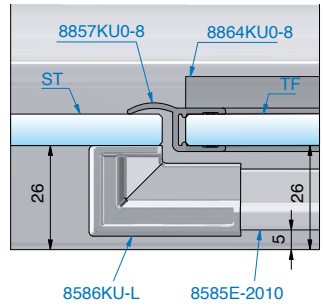

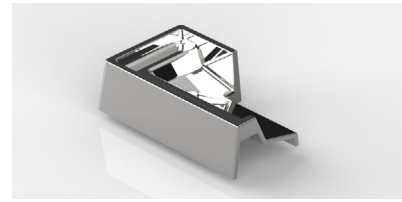

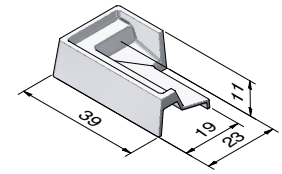

article no.	finish	article description	pu/pieces
8586KU7-L	gloss chrome	end cap left side	1/1
8586KU3-L	black matt		
8586KU134-L	white matt		

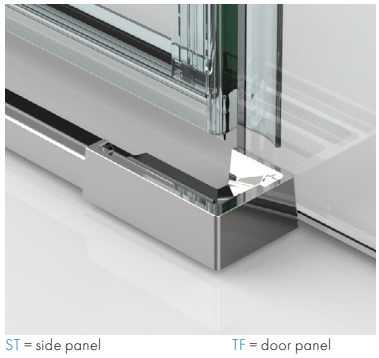

ST = side panel TF = door panel

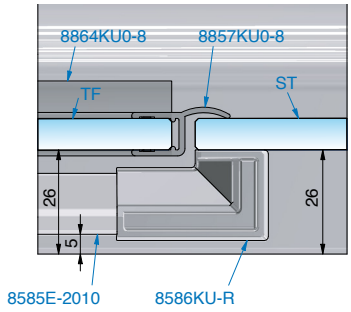

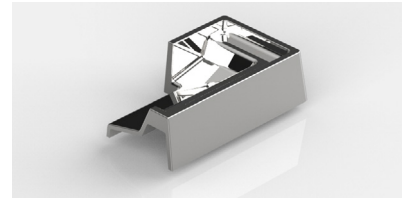

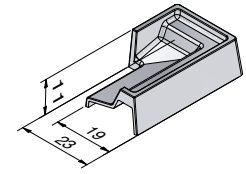

article no.	finish	article description	pu/pieces
8586KU7-R	gloss chrome	end cap right side	1/1
8586KU3-R	black matt		
8586KU134-R	white matt		

end caps and connectors

for square splash guards



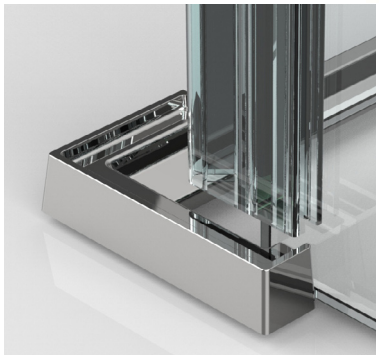

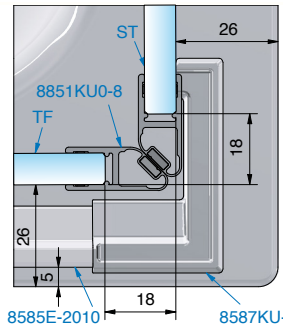

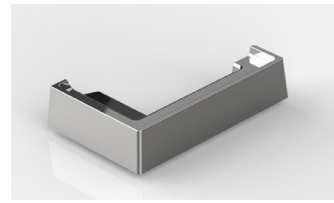

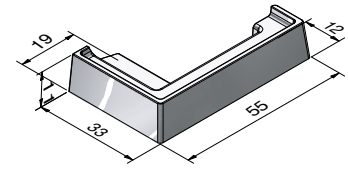

article no.	finish	article description	pu/pieces
8587KU7-L	gloss chrome	end cap left side	1/1
8587KU3-L	black matt		
8587KU134-L	white matt		

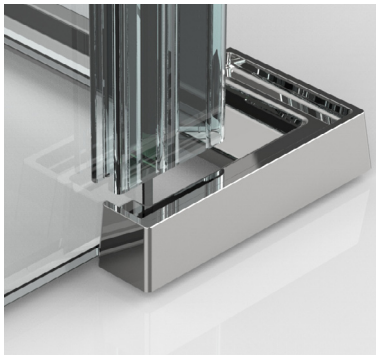

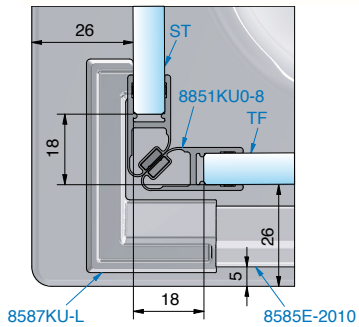

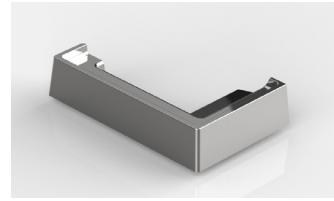

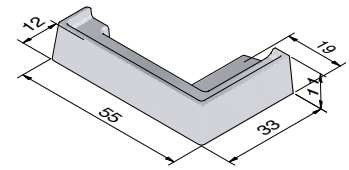

article no.	finish	article description	pu/pieces
8587KU7-R	gloss chrome	end cap right side	1/1
8587KU3-R	black matt		
8587KU134-R	white matt		

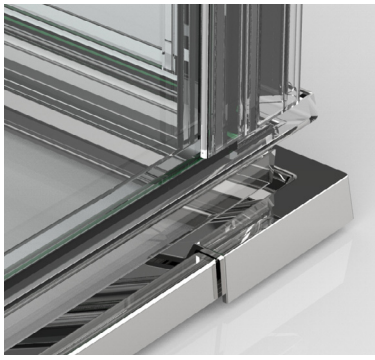

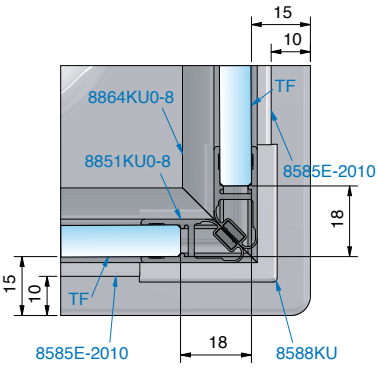

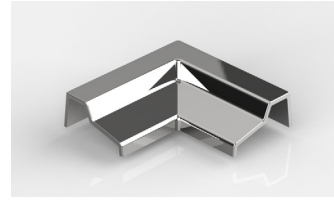

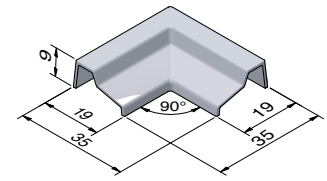

article no.	finish	article description	pu/pieces
8588KU7	gloss chrome	corner connector 90°	1/1
8588KU3	black matt		
8588KU134	white matt		

ST = side panel TF = door panel

seal profiles with a reduced glass insertion in transparent and black



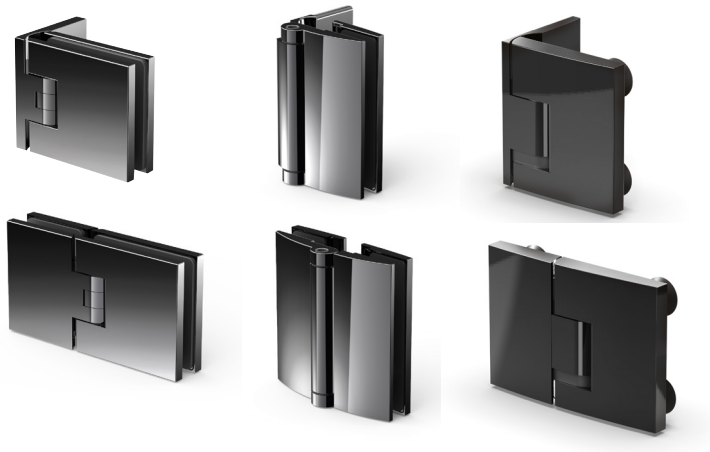

The bathroom design is receiving more and more attention and the desire for individualization is getting stronger. Again, we set new accents for surfaces and colors. we not only offer you the newest trend colors with matching accessories for FLAMEA+, FARDELLO, PAVONE and FARFALLA series, but our seal profiles are also available with a new look. The reduced glass insertion of our new seal profiles offers even more possibilities in the design of exciting shower solutions.

Black EDITION

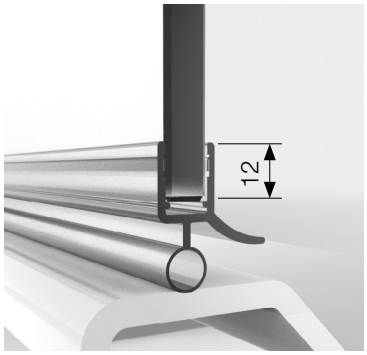

art-no.
8863KU0-8-2010
natural color
opaque

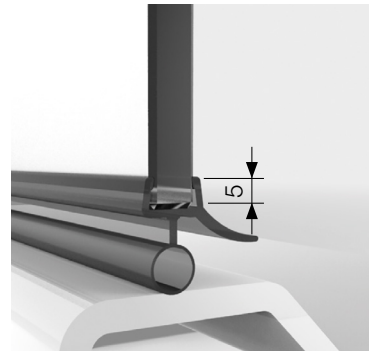

art-no.
8863KU0-8K-2010
natural color opaque
8863KU3-8K-2010
black

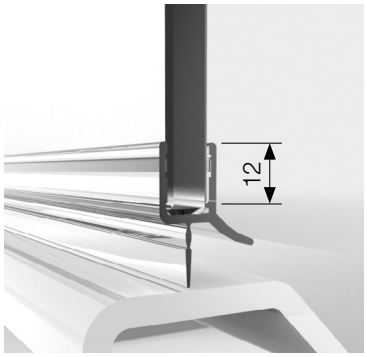

art-no.
8864KU0-8-2010
natural color
opaque

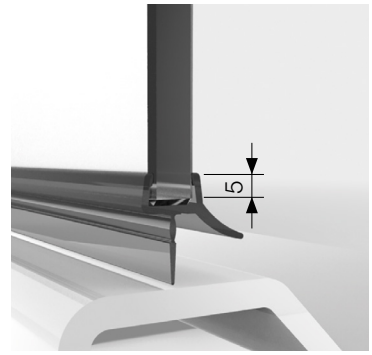

art-no.
8864KU0-8K-2010
natural color opaque
8864KU3-8K-2010
black

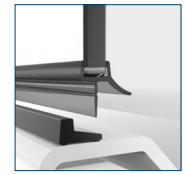

with splash guard
8590E6EV5-2010

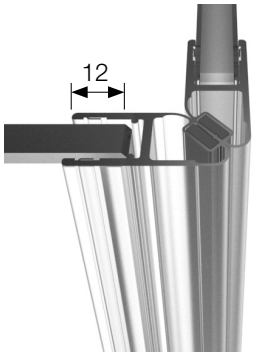

art-no.
8851KU0-8-2010
natural color
opaque

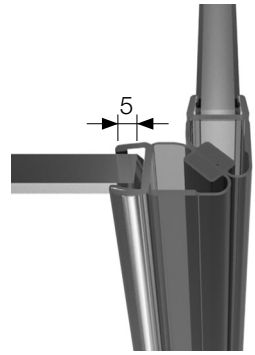

art-no.
8851KU0-8K-2500
natural color opaque
8851KU3-8K-2500
black

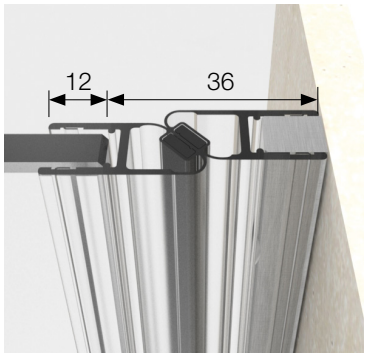

art-no.
8852KU0-8-2010
natural color
opaque

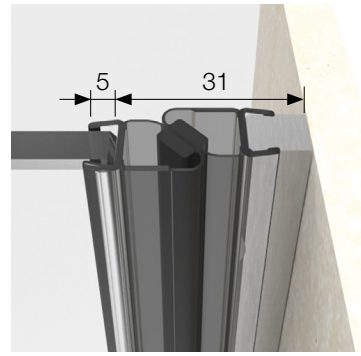

art-no.
8852KU0-8K-2500
natural color opaque
8852KU3-8K-2500
black

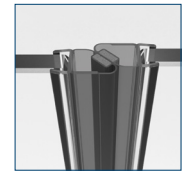

version glass-glass

***art-no.-material/finish:** KU0 = plastic natural color-opaque; KU3 = plastic black

sealing profiles for shower door/tray

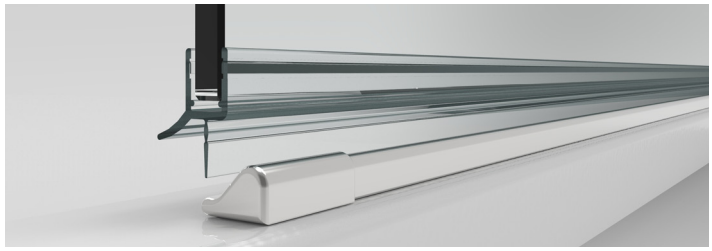

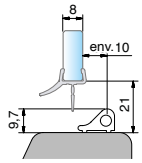

art-no. 8864KU0-8K-2010
art-no. 8864KU3-8K-2010
for 8 mm glass in combination with splash guard (art. no. 8535E6EV5)

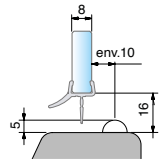

art-no. 8864KU0-8K-2010
art-no. 8864KU3-8K-2010
for 8 mm glass in combination with acrylic semi-circular rod (art. no. 8538KU5, radius = 5 mm)

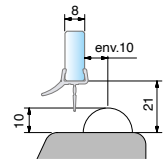

art-no. 8864KU0-8K-2010
art-no. 8864KU3-8K-2010
for 8 mm glass in combination with acrylic semi-circular rod (art. no. 8539KU5, radius = 10 mm)

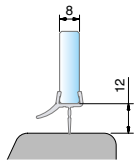

art-no. 8864KU0-8K-2010
art-no. 8864KU3-8K-2010
for 8 mm glass in combination with acrylic semi-circular rod (art. no. 8539KU5, radius = 10mm)

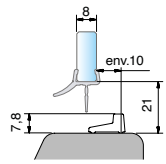

art-no. 8864KU0-8K-2010
art-no. 8864KU3-8K-2010
for 8 mm glass in combination with splash guard (art-no. 8590E6EV5-2010)

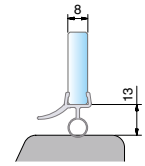

art-no. 8863KU0-8K-2010
art-no. 8863KU3-8K-2010
for 8 mm glass

Black EDITION

***article no. end:** KU0 = plastic natural color opaque; KU3 = plastic natural color black

sealing profiles for glass-glass 90°



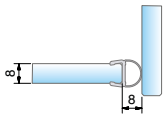

art-no. 8861KU0-8K-2500
art-no. 8861KU3-8K-2500
for 8 mm glass for an one sided opening shower hinge or pendelum shower hinge

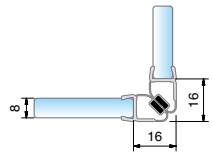

art-no. 8851KU0-8K-2500
art-no. 8851KU3-8K-2500
for 8 mm glass for an one sided opening shower hinge or pendelum shower hinge

sealing profiles for glass-glass 135°

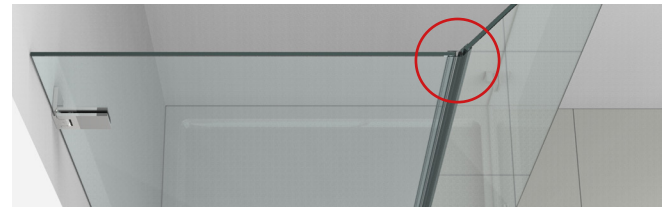

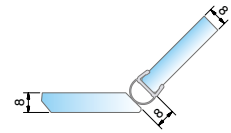

art-no. 8861KU0-8K-2500
art-no. 8861KU3-8K-2500
for 8 mm glass for an pendelum shower hinge

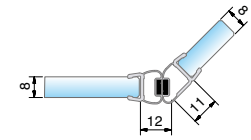

art-no. 8875KU0-8K-2500
art-no. 8875KU3-8K-2500
for 8 mm glass for an one sided opening shower hinge or pendelum shower hinge

sealing profiles for glass-glass 180°



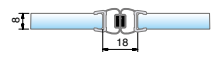

art-no. 8850KU0-8K-2500
art-no. 8850KU3-8K-2500
for 8 mm glass for an pendelum shower hinge

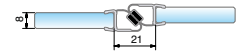

art-no. 8852KU0-8K-2500
art-no. 8852KU3-8K-2500
for 8 mm glass for an one sided opening shower hinge



art-no. 8861KU0-8K-2500
art-no. 8861KU3-8K-2500
for 8 mm glass for an pendelum shower hinge

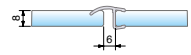

art-no. 8857KU0-8K-2500
art-no. 8857KU3-8K-2500
for 8 mm glass for an one sided opening shower hinge

not available in black

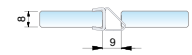

art.-no. 8845KU0-8K-2500
for 8 mm glass for an pendelum shower hinge
glass-glass 180°

not available in black

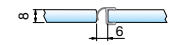

art-no. 8865KU0-8-2500
art-no. 8865KU0-8-2500
for 8 mm glass for an one sided opening shower hinge

Black EDITION

seal profiles with a reduced glass insertion in transparent and black

sealing profiles for door/wall 90°

hinge side

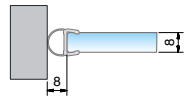

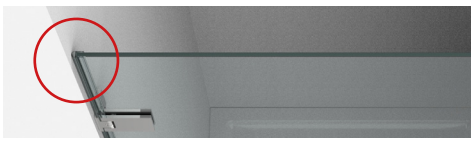

art-no. 8861KU0-8K-2010
art-no. 8861KU3-8K-2010
for 8 mm glass as a sealing to the wall for an pendulum shower hinge

handle side

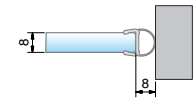



art-no. 8861KU0-8K-2010
art-no. 8861KU3-8K-2010
for 8 mm glass as a sealing to the wall for an pendulum shower hinge

sealing profile on carrier profile for door stop



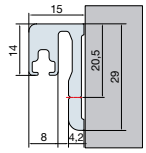

art. no. 8880_*-2010
length = 2010 mm, finished see article-no.-end
art. no. 8880_*-2500
length = 2500 mm, finished see article-no.-end

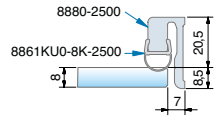

art-no. 8861KU0-8K-2010
art-no. 8861KU3-8K-2010
for 8 mm glass
carrier profile for door stop

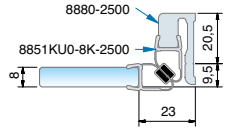

art-no. 8851KU0-8K-2010
art-no. 8851KU3-8K-2010
for 8 mm glass
carrier profile for door stop

carrier profile for sealing profile

hole gaps

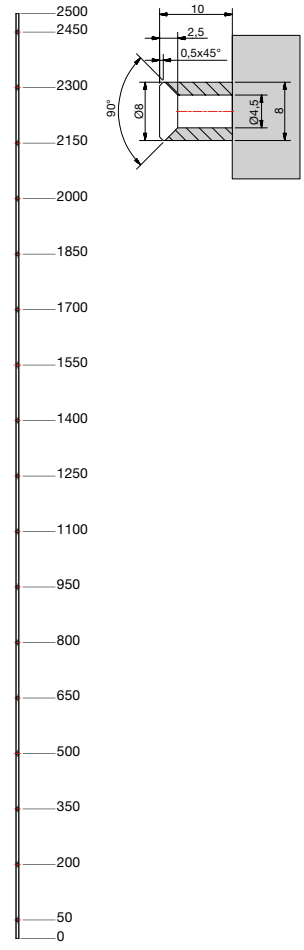

profile applications

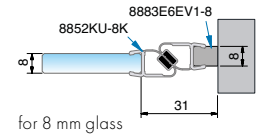

for 8 mm glass
with sealing profile
8852KU0-8K-2500 / 8852KU3-8K-2500
and carrier profile 8883E6EV1-8

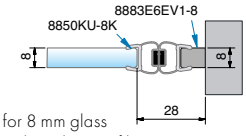

for 8 mm glass
with sealing profile
8850KU0-8K-2500 / 8850KU3-8K-2500
and carrier profile 8883E6EV1-8

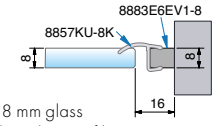

for 8 mm glass
with sealing profile
8857KU0-8K-2500 / 8857KU3-8K-2500
and carrier profile 8883E6EV1-8

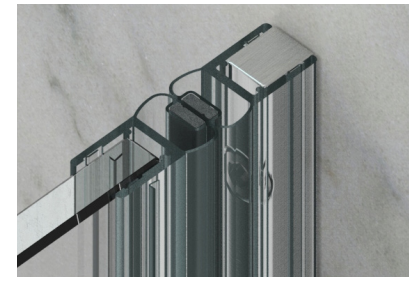

***art-no.-material/finish:**
E6/EV1 = aluminium special etched anodised natural color;
E6/EV5=aluminium special etched anodised gloss chrome finish;

KU0 = plastic natural color opaque;
KU3 = plastic natural color black



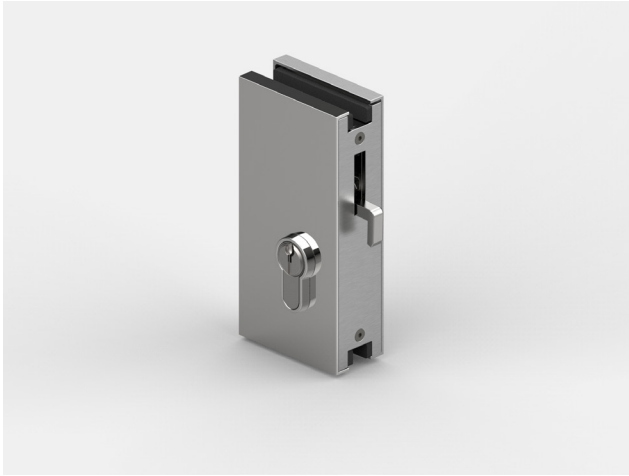

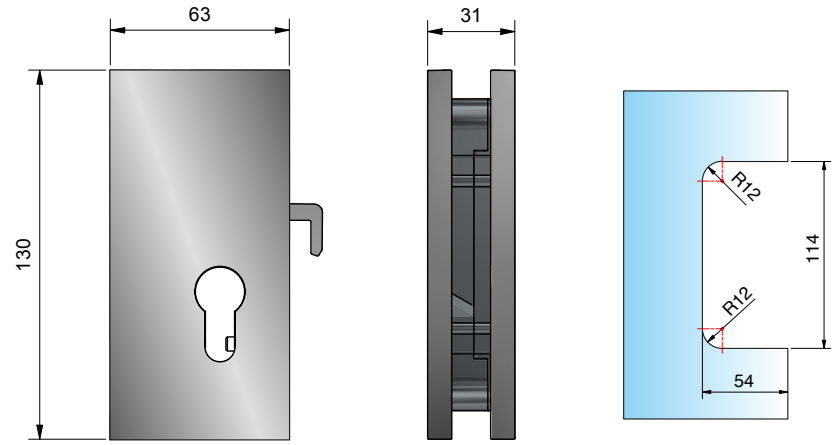

article no.	finish	glass thickness	article description	features	pu/pcs
3441ZN5-SAG	gloss chrome	8 - 12,76 mm	glass door lock	-mounting of handles possible on either side -lock rosette self-adhesive	1/1
3441ZN1-SAG	matt chrome				
3441ZN22-SAG	stainless steel optic				
3441ZN135-SAG	deep black matt				

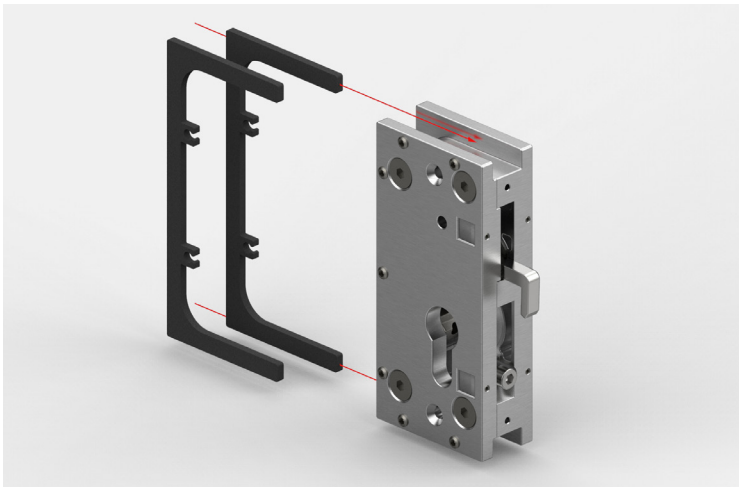

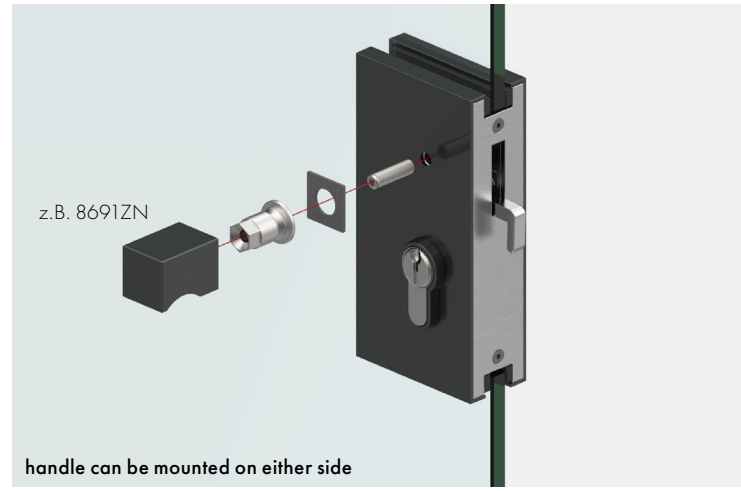

handle can be mounted on either side

Please order the corresponding contact material sets as well:

article no.	glass thickness	article description	pu/pcs
HX-SET11	8 - 12,76 mm	contact material set 11	1/1
HX-SET12	10-10,76 mm	contact material set 12	
HX-SET13	12-12,76 mm	contact material set 13	


ZN135 deep black matt



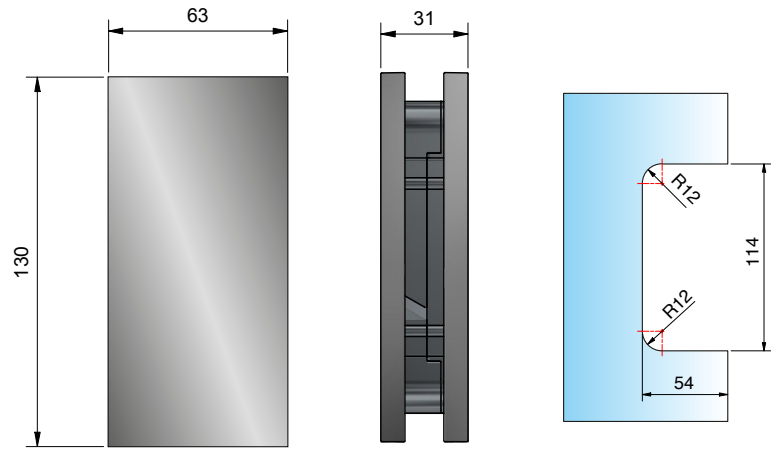

article no.	finish	glass thickness	article description	features	pu/pcs
3441ZN5-GKAG	gloss chrome	8 - 12,76 mm	lock-box for glass mounting		1/1
3441ZN1-GKAG	matt chrome				
3441ZN22-GKAG	stainless steel optic				
3441ZN135-GKAG	deep black matt				



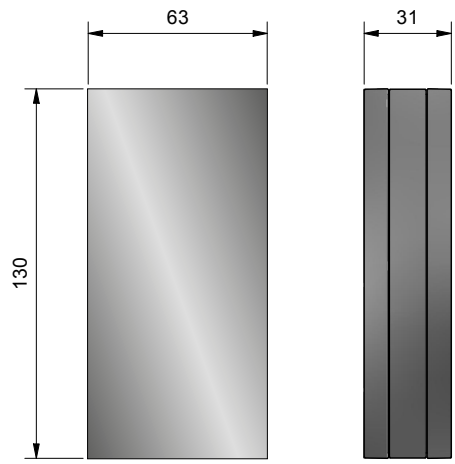

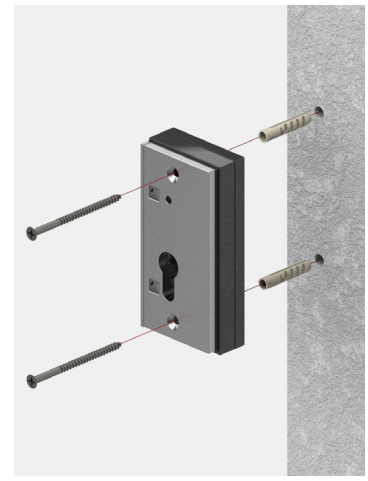

article no.	finish	article description	features	pu/pcs
3441ZN5-GKAW	gloss chrome	lock-box for wall mounting	- concealed holes for mounting behind the covers	1/1
3441ZN1-GKAW	matt chrome			
3441ZN22-GKAW	stainless steel optic			
3441ZN135-GKAW	deep black matt			



article no.	article description	pu/pcs
3441MS-SZ	Euro short cylinder	1/1
3441MS-SZH	Euro short cylinder	



article no.	finish	Artikelbez.	pu/pcs
3441ZN5-RS	gloss chrome	lock rosette	1/1
3441ZN1-RS	matt chrome		
3441ZN22-RS	stainless steel optic		
3441ZN135-RS	deep black matt		

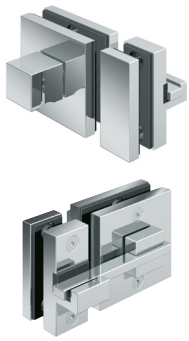

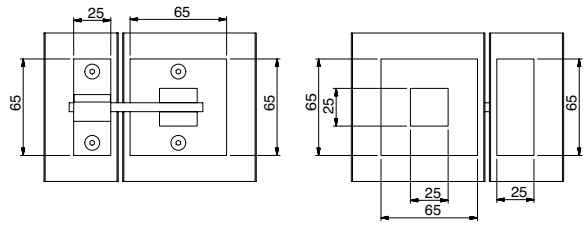

article no.	finish	glass thickness	article description	features	pu/pieces
8374MS7	gloss chrome finish	6-10 mm	glass door lock with locker and striking box	with outer adjusting knob and locking pin inside	1/1

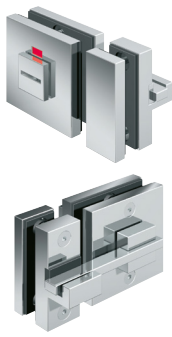

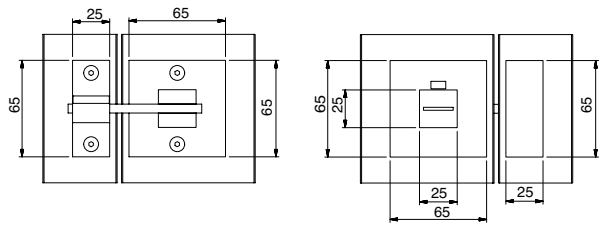

article no.	finish	glass thickn.	article description	features	pu/pieces
8375MS7	gloss chrome finish	6-10 mm	glass door lock with locker and striking box	with viewing pane red/green and locking pin inside	1/1

Not for busy and public areas! Ask us. We will help you.

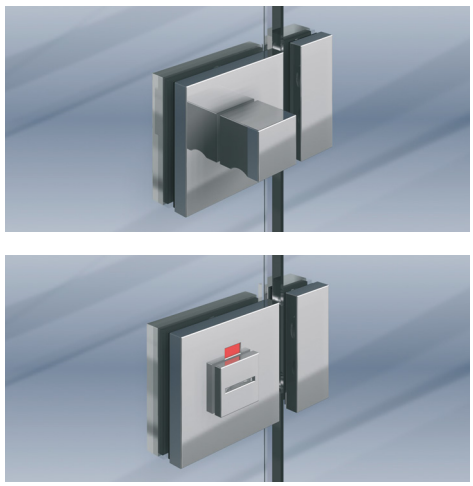

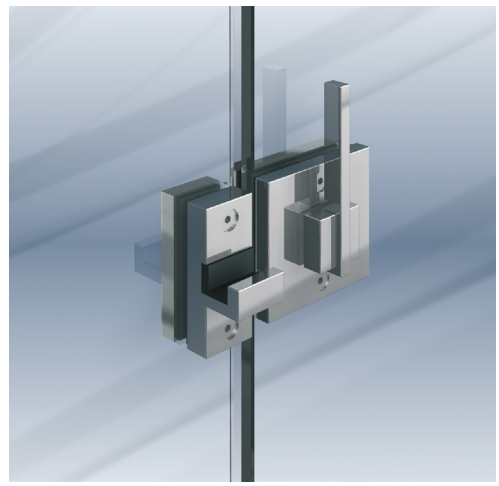

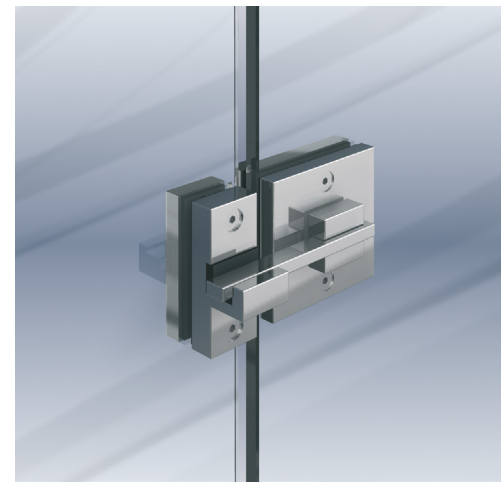



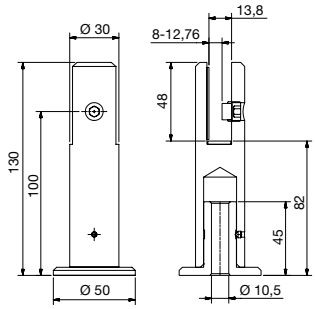





article no.	finish	plate thickness	article description	pu/pieces
31322VA2	stainless steel	≤ 12 mm	floor mount for vertical mount of glass	1/1

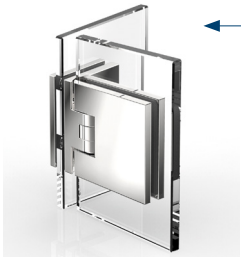

you can find the FLAMEA+ hinge 8136ZN on page 51.



8375MS7



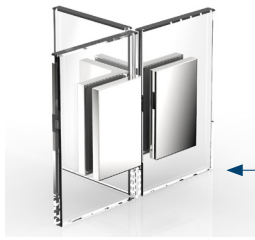

you can find the angle connector 8197ZN on page 53



you can find the FLAMEA+ in our catalog "world of interior".

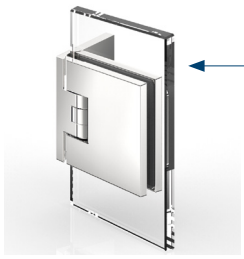

you can find the FLAMEA+ hinge 8130ZN on page 48.

For the stability of the shower, we recommend that you do not install the round or square support bar longer than 1200 mm.
A shower with a railing system over a certain size, will never have the same stability as a shower with a support bar and T-adapter.

Attention: Depending on load, door size and reqirements for the stiffness, additional bracing parts will be required. Depending on size of the side parts, the quantity of the ground anchors has to be adapted. Doors have to be limited regarding their opening path. For that purpose, overopening limitations and and opening limiter have to be installed. Our application engineers would appreciate to assist you.



general remarks for bent glass:

tolerance:

- dimensional tolerances = ±2 mm per running meter
- offset (twist) = max. ±3 mm per running meter
- deflection of the height edges = max. ±3 mm per running meter
- deviation of contour accuracy = max. ±3 mm per running meter
- curvatures in the area of the run-off edges possible

anisotropies:
Anisotropies are formed in glass that has undergone a thermal tempering process. The different stress zones result in birefringence. A birefringence occurs due to the different stress zones of the light rays. Only the polarized parts of the daylight make this phenomenon visible through spectral colored rings, cloud images and the like. These appearances are production-related and are not reasons for complaint.

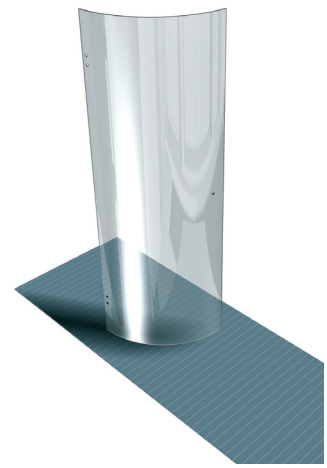

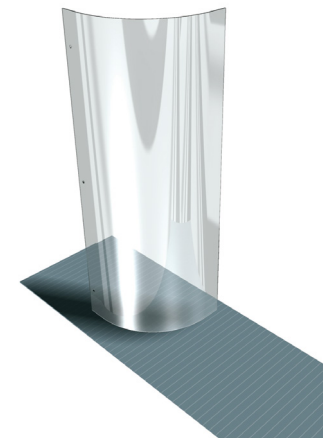




8570VA R500


8522VA

glass-set for 8570VA R500
glass processing:
tempered safety glass 8 mm,
all edges ground and polished

shower tray*: 900 x 900 mm for R500
shower height: 2000 mm

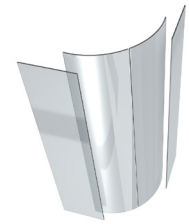

consisting of:

article no	article description	pieces
8581-1GLAS-R500	door panel right, TSG 8 mm for round showers	1
8581-2GLAS-R500	door panel left, TSG 8 mm for round showers	1
8581-3GLAS-900	side panel for round shower 8570VA	2

glas-sset for 8522VA
glass processing:
tempered safety glass 8 mm,
all edges ground and polished

Ø 1080mm
shower height: 2000 mm

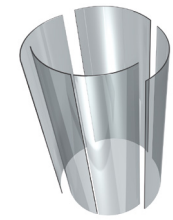

consisting of:

article no	article description	pieces
8525-1GLAS-R515	door panel right, TSG 8 mm for round showers	1
8525-2GLAS-R515	door panel left, TSG 8 mm for round showers	1
8525-3GLAS-R540	side panel for round shower 8522VA	3

* up to the bottom edge guiding rail

glass processing:
tempered safety glass 6 mm, clear: 1 bore ø 14 mm;
4 bores ø 18 mm
all edges ground and polished

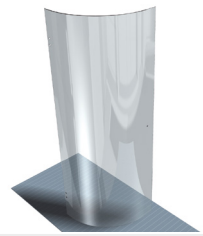

article no	article description	pu/pieces
8144-1GLAS-R500	bent door panel for FARFALLA, PAPILLON and PILLANGO h 2000 mm, R500	1/1
8143-1GLAS-R550	bent door panel for FARFALLA, PAPILLON and PILLANGO h 2000 mm, R550	1/1



glass processing:
tempered safety glass 6 mm, clear: 1 bore ø 14 mm;
4 bores ø 18 mm
all edges ground and polished

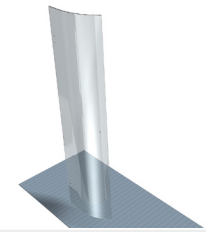

article no	article description	pu/pieces
8147-1GLAS-R500	bent door panel for FARFALLA and PILLANGO h 2000 mm, R500	1/1
8147-1GLAS-R550	bent door panel for FARFALLA and PILLANGO h 2000 mm, R550	1/1





type 501



type 503



type 502

glass processing:
tempered safety glass 6 mm, clear: 1 hole ø 14 mm;
4 hole ø 16 mm
all edges ground and polished

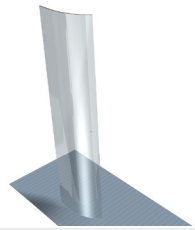

article no	article description	pu/pieces
8146-1GLAS-R500	bent door panel for FLINTER, h 2000 mm, R500	1/1
8146-1GLAS-R550	bent door panel for FLINTER, h 2000 mm, R550	1/1

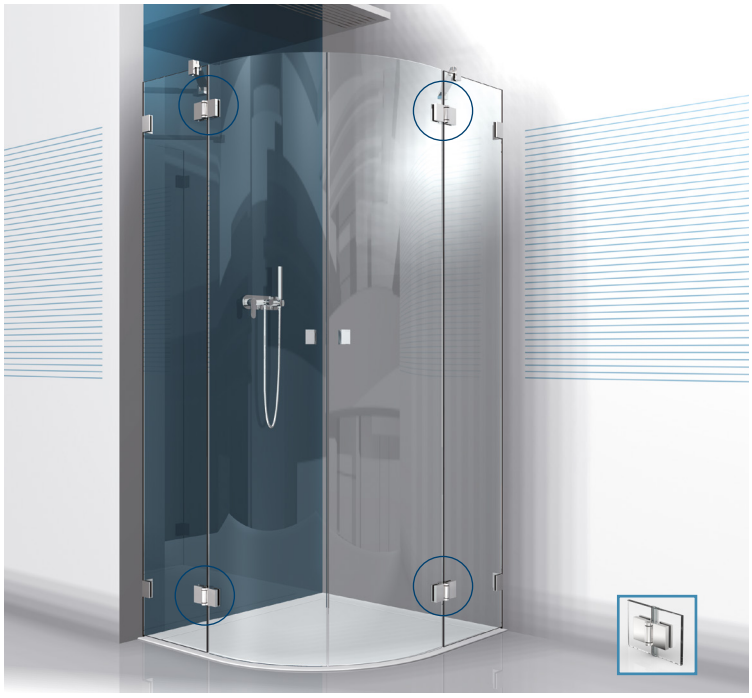



type 502

glass processing:
tempered safety glass 6 mm, clear, 1 hole ø 14 mm
all edges ground and polished

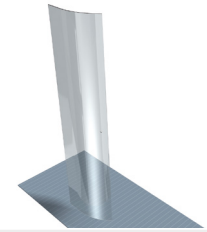

article no	article description	pu/pieces
8145-1GLAS-R500	bent door panel for FLUTURE, h 2000 mm, R500	1/1
8145-1GLAS-R550	bent door panel for FLUTURE, h 2000 mm, R550	1/1





type 502



8000ST8, torque wrench with setting scale		
size = maximum torque	Nm	20
tightening value (scale range)	Nm	4-20
scale graduation, 1 graduation =	Nm	0,1
overall length	mm	230
weight	kg	0,4
square drive inch	inch	1/4"

article no.	article description	pu/pieces
8000ST8	torque wrench with setting scale – automatic triggering	1/1

accuracy: ± 3 % of indicated

version: robust torque wrench, adjustable with micrometer scale, with protection against accidental changes to the setting. integral ratchet to accept sockets. Size 20 – with reversible ratchet and fixed square drive pin – only for right-hand tightening.

function: on reaching the set torque value the wrench triggers "indicating" (audibly and perceptible) and is then again immediately ready for use.

application: for controlled tightening of screws to pre-set torque.

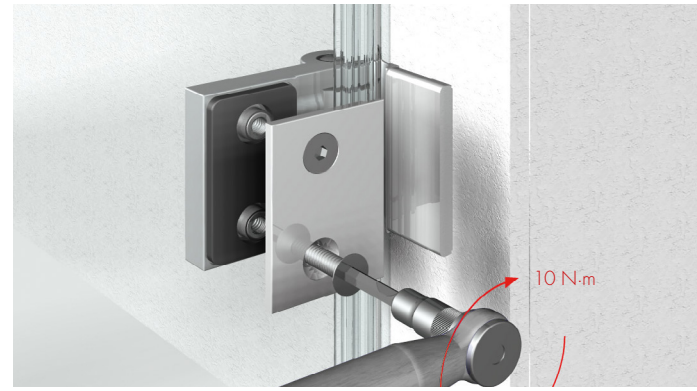

Example FLINTER



article no.	article description	pu/pieces
Z061	scissors for sealing profiles	1/1
Z061-1	1x replacement blade for Z061	1/1
Z061-5	5x replacement blade for Z061	1/1

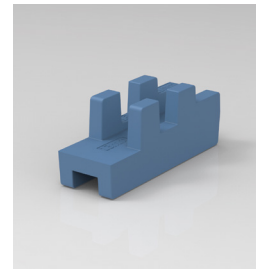

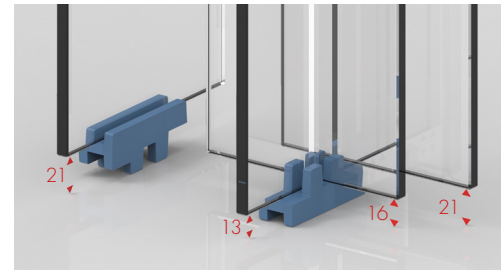

article no.	article description	pu/pieces
8840KU-PS	assembly aid support for shower doors	1/1



article no.	article description	pu/pieces
8822KU-ML	mounting aid for gluing door handles on to the glass	1/1



cutter

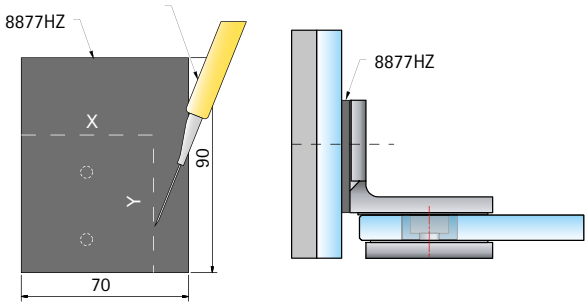

article no.	article description	pu/pieces
8877HZ	for installation of hinges for glass walls	1/1

article no.	thickness	article description	pu/pcs.
8890-1KU0-1	1 mm	assembly aid - spacer and support block	25 pieces
8890-1KU0-2	2 mm		
8890-1KU0-3	3 mm		
8890-1KU0-4	4 mm		
8890-1KU0-5	5 mm		
8890-1KU0-6	6 mm		
8890-1KU0-8	8 mm		
8890-1KU0-10	10 mm		

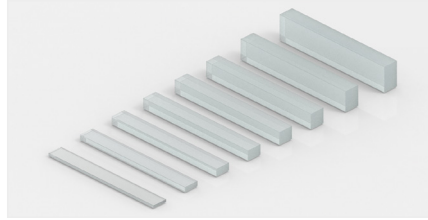

combined in one bag; each 100 x 80 mm

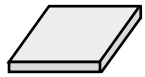

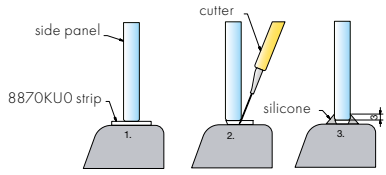

article no.	article description	pu/pieces
8870KU0	each 2 plates of soft PVC in 2 and 3 mm thickness	1/1

for adjustment of the VIVERE extender weel

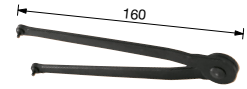



article no.	article description	pu/pieces
Z058	adjustable face spanner Ø 3 mm	1/1

for installation of point-fixed, e.g. for 7772VA

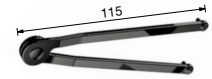

article no.	article description	pu/pieces
Z059	adjustable face spanner Ø 2,5 mm	1/1

for shower door hinge PILLANGO

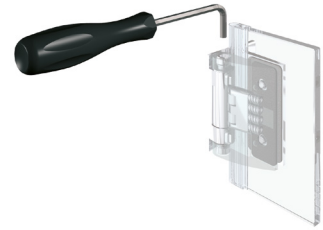

article no.	article description	pu/pieces
8479ST8	allen wrench angular 4 mm	1/1

glass thickness: 6-10 mm



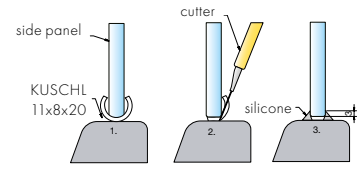

article no.	article description	pu/pieces
KUSCHL11X8X20	plastic tubing (1,5 mm) for security glass edges	1/1

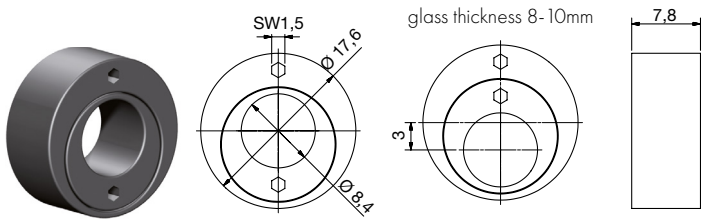

excenter sleeve position: center - no offset -

excenter sleeve position: - max. offset -

position of excenter sleeve can be freely selected, adjustment by a hexagon socket wrench SW1.5mm

article no.	article description	pu/pieces
8121KU	double excenter sleeve for shower door hinge FARFALLA, PILLANGO and PAPILLON, sas well as for all fixations with glass drilling Ø 18mm and stud Ø 8,2mm	1/50



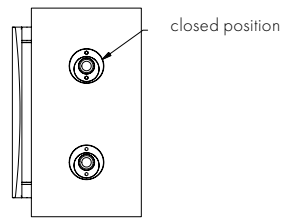

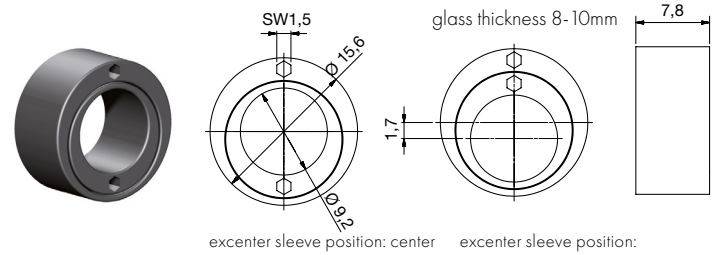

excenter sleeve position: center - no offset -

excenter sleeve position: - max. offset -

angle can be freely selected, adjustment by a hexagon socket wrench SW1.5mm

article no.	article description	pu/pieces
8149KU	double excenter sleeve for shower door hinge FLINTER and NIVELLO, as well as for all fixations with glass drilling Ø 16mm and stud Ø 9mm	1/50



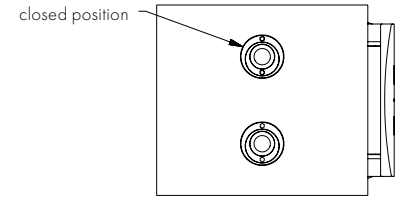

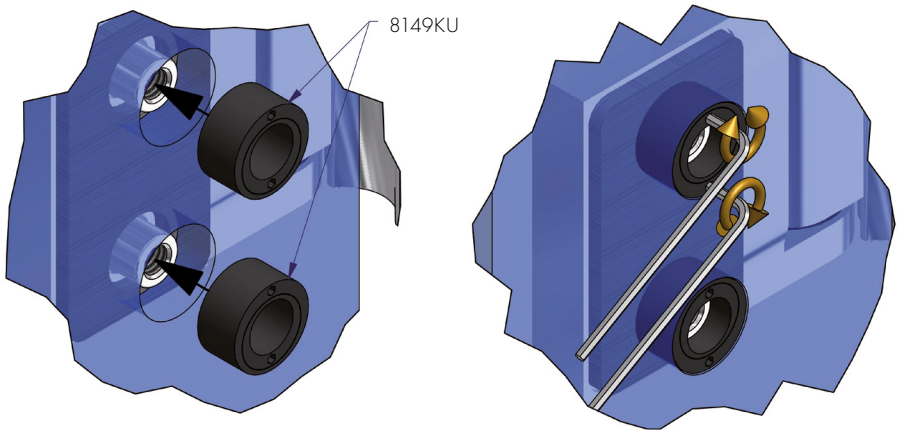

the double excenter sleeves permit a better centering and fixation of the shower door hinge in the glass drilling.

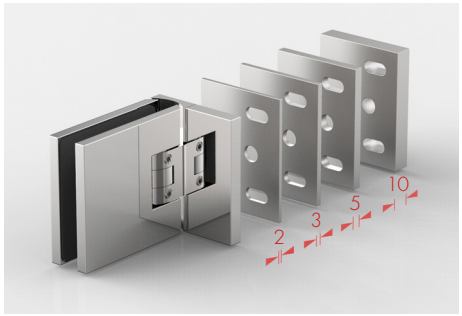

article no.	finish	thickness	article description	pu/pieces
8130-30MS7-2	gloss chrome	2 mm	compensation shim for 8130ZN	1/1
8130-30MS7-3		3 mm		
8130-30MS7-5		5 mm		
8130-30MS7-10		10 mm		
8134-30MS7-2		2 mm	compensation shim for 8134ZN	1/1
8134-30MS7-3		3 mm		
8134-30MS7-5		5 mm		
8134-30MS7-10		10 mm		
8180-30MS7-2		2 mm	compensation shim for 8180ZN	1/1
8180-30MS7-3		3 mm		
8180-30MS7-5		5 mm		
8180-30MS7-10		10 mm		



suitable for the series:
FLAMEA+ sauna and FARDELLO sauna

article no.	article description	pu/pieces
8878FKM-1	insert for glass cutout, 300x8x1 mm	1/1
8878FKM-2	insert for glass cutout, 300x8x2 mm	

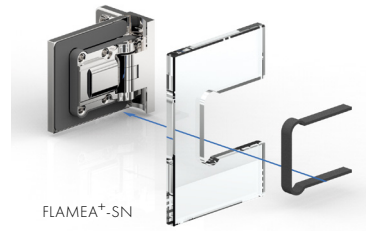
FLAMEA+-SN

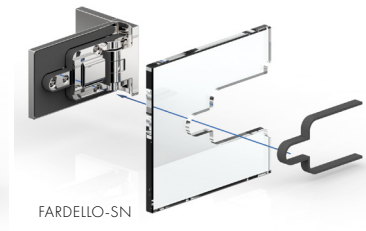
FARDELLO-SN



article no.	article description	pu/pieces
Z092VA	spax screw, countersink, TX25 drive 6x60 A2	1/1
Z092VA5		
Z092VA6		

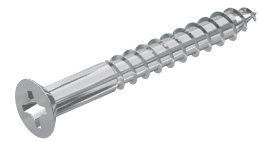

article no.	article description	pu/pieces
7083-1VA	countersink wood screw recessed 6 x 50 mm	1/1
S7997A2D5X60	countersink wood screw recessed 5 x 60 mm	1/1

VA5 = stainless steel gloss chrome finish VA6 = stainless steel matt chrome finish



article no.	article description	pu/pieces
C84	sample case swing door hinges	1/1



article no.	article description	pu/pieces
C85	sample case striker hinges	1/1



article no.	article description	pu/pieces
C86	sample case accessories	1/1



article no.	article description	pu/pieces
C91	sample case EVERYSPACE/Walk in	1/1

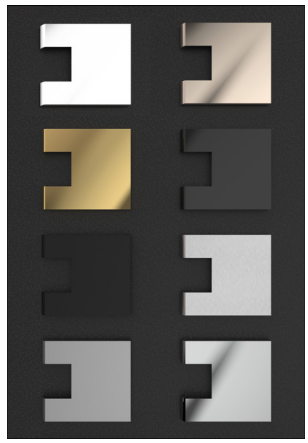

article no.	article description	pu/pieces
C88	sample plate case, overview of standard surface colors	1/1



article no.	article description		pu/pieces
C40	display for product samples	FLAMEA	1/1
C41	display for product samples	FLINTER	1/1
C42	display for product samples	FLUTURE	1/1
C43	display for product samples	PONTERE	1/1
C44	display for product samples	FARFALLA	1/1
C45	display for product samples	PILLANGO	1/1
C46	display for product samples	PAPILLON	1/1
C47	display for product samples	VIVERE II	1/1
C48	display for product samples	NIVELLO	1/1
C49	display for product samples	NIVELLO+	1/1
C55	display for product samples	FLAMEA+	1/1
C87	display for product samples	PAVONE	1/1
C89	display for product samples	FARDELLO	1/1
C90	display for product samples	TURA	1/1
C92	display for product samples	EVERYSPACE	1/1

article no.	article description	pu/pieces
8203CTP	gentle care - cleaning product for shower fixtures content 250 ml	1/1



description

- special cleaner for the care of high-quality hardware and all metal surfaces
- for refined surfaces
- gentle cleaning and easy application
- reliably removes lime, grease and soap stains

application

Apply some gentle care to a soft, damp cloth and rub the surface to be cleaned without pressure. After a short reaction time, rinse thoroughly with clear water. Then polish with a soft, dry cloth.
Repeat the process for stubborn incrustations.

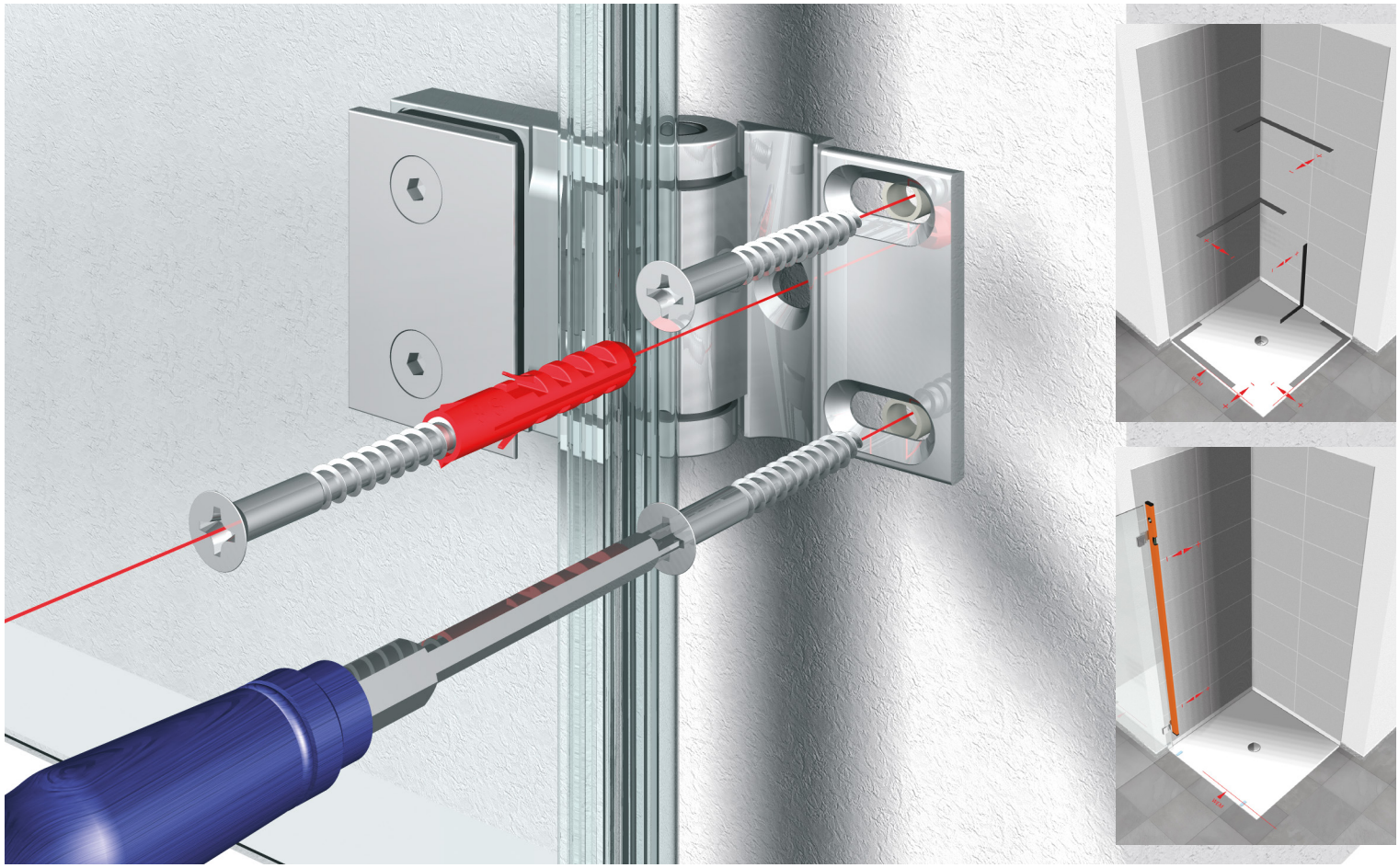

the proper assembling of magnificent bathrooms

Swing door hinge or shower door hinge with counter plate - the proper and correct assembly has fundamental influences on important functions and the durability of the system itself. Please always consider the provided assembly instructions for shower hinges and hand it over to the customer after installation. You can find important general remarks on the following pages and on www.pauli.de/en

Please consider:

in order to maintain the warranty, the installation has to be executed according to the assembly instruction

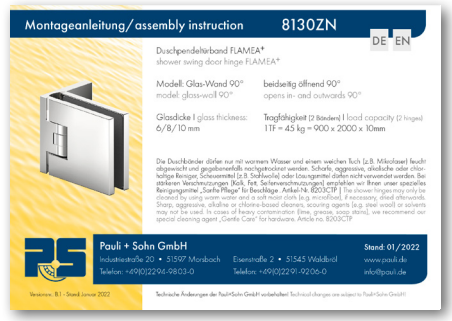

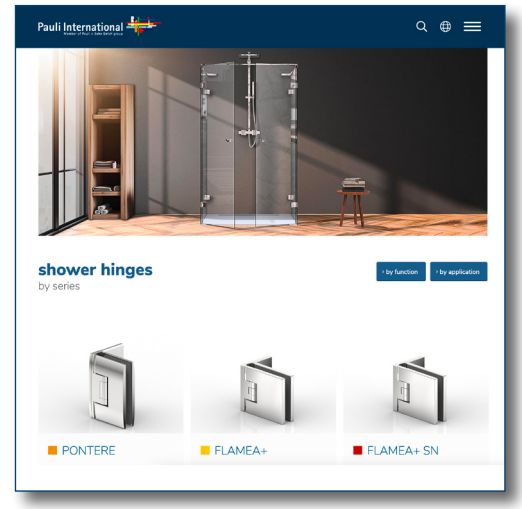

assemble the shower

- important steps for the proper installation

planning	select correctly	during the planning-process, you should find the best and most satisfying solution for the customer.	384
measurement	measure correctly	the right measurement is one of the most important duties for a professional order	385
fixation	load transfer	please always consider the load transfer. fixations on the wall have to be suitable for the corresponding door weight.	385
	proper screw connection + torque	the assembling of the hinges has to be executed with specific tools and material.	386
	flat surface	on flat surfaces, force-fit connections have to be secured.	387
	closed position	some of our shower hinges are equipped with adjustable closed position.	388
	perpendicular installation	the perpendicular and horizontal installation has to be considered in every case.	388
	reinforcement side part	the stabilization and reinforcement of the showers are an important security aspect.	389
	assembly aid	support block with pre-defined distances for mounting the shower	389
splashwater protection	usage of profiles and seals	in order to guarantee an optimal water resistance, Pauli + Sohn offers different opportunities and products.	390
maximum point of pressure	proper type and hinge according to the bathroom	the following things have to be considered: - structural condition / requirement - proper selection of the shower type and corresponding hinges including the consideration of a protection against over opening.	391
assembly	assembly general information	many of our hinges have an adjustable closed position and are therefore also suitable for non - flush walls.	394
	installation with U-profile	install U-profile in wall and floor properly	395
	assembly with swing hinges	what should be observed during assembly?	395
	intelligent assembly	assembly without splash protection	394

general remarks

All remarks and instructions on the following pages have to be followed, otherwise guarantee and liability expire immediately.

general information on hinges with pressure rollers for the closed position

Depending on the system, micro-scratches can cause a superficial matting in the area of the rollers on the visible contact surface (e.g. closed position roller).



installation location

- The hinges may not be installed and used in rooms/areas with high chlorine and alkaline content because surface as well as functionality will be damaged sustainable.
- In case of using our shower hinges in areas with swimming pools, saltwater, saunas or steam baths, please contact our application engineers prior the installation!

maintenance instructions

- The shower hinges may only be cleaned with warm water and a soft towel (i.e. microfiber) and dried afterwards if necessary. Strong, aggressive, alkaline-based or chlorinated cleaner, abrasive cleaner (i.e. steel wool) or organic solvent must to be avoided!



planning

professional selection of shower type and corresponding hinge

- There are many mandatory and important facts when planning a shower. in order to meet the expectations of the customer and his unique structural situation on-site, you should plan and calculate all facts carefully.
- An important requirement is the visit and inspection of the bathroom in order to evaluate the situation on site.



information on DIN 14428 and the technical guideline no.24

The offered/confirmed shower enclosure, with or without lockable door or doors, is a splash-protected and individually manufactured product for a special order, which has been designed by us according to the valid regulations and the generally recognized technical rules.

The hardware and glass products used meet the requirements of DIN 14428 and TR 24 respectively. However, the shower enclosure, as a construction product, does not comply with DIN 14428 and, in accordance with the EU Construction Products Regulation, Chapter II, Art. 5, is not provided with a CE mark.

Depending on the design, water can escape from a shower enclosure.

The amount of water leaking depends on design-related factors of the construction, such as the selection of hinges and seals, the properties of the wall material used and their seams, the shower tray or bathtub or the condition of the floor surface, as well as the shower heads used, and thus cannot be predicted.

Whether escaping water returns to the shower area, depends on the condition of the floor surface in the area of the shower enclosure and cannot be guaranteed by us. An examination of the condition of the floor surface in the area of the shower enclosure was not carried out with regard to the return of escaping water.

measurement on site

professional measurement

- The professional measurement is one of the most important duties for a professional and successful order. Mistakes must be avoided as they cause a loss of time and might be expensive during correction.
- Systematic knowledge will be received during our shower-level-trainings at the Pauli Academy.
- You can find different measurement sheets for all hinges and fittings for different installations on our homepage www.pauli.de.

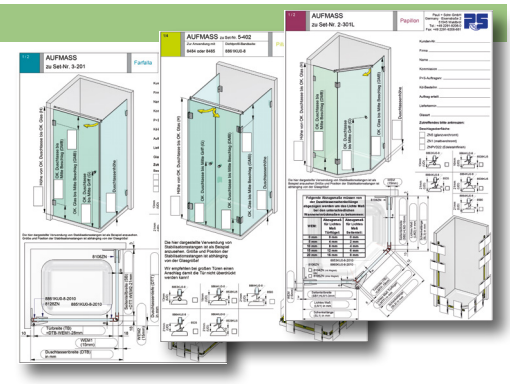

fixation

load transfer

- Please always take load transfer into consideration.
- The fixations on the wall have to be suitable for the corresponding door weight.
- Please follow the maximum loading capacity of the particular shower door hinges.

loading capacity of two hinges:



PONTERE: 50 kg
(except 8404)
maximum door width 1000 mm
(door height of 2000 mm and 10 mm glass)



PAVONE: 36 kg
maximum door width 900 mm
(door height of 2000 mm and 8 mm glass)



FARFALLA: 40 kg
maximum door width 1000 mm
(door height of 2000 mm and 8 mm glass)



PAPILLON: 40 kg
maximum door width 1000 mm
(door height of 2000 mm and 8 mm glass)



NIVELLO^{+}: 36 kg
maximum door width 900 mm
(door height of 2000 mm and 8 mm glass)



FLAMEA^{+}: 45 kg
maximum door width 1000 mm
(door height of 2000 mm and 8 mm glass)



FLAMEA: 36 kg
maximum door width 900 mm
(door height of 2000 mm and 8 mm glass)



PILLANGO: 40 kg
maximum door width 1000 mm
(door height of 2000 mm and 8 mm glass)



FLINTER: 36 kg
maximum door width 900 mm
(door height of 2000 mm and 8 mm glass)



NIVELLO: 36 kg
maximum door width 900 mm
(door height of 2000 mm and 8 mm glass)



FARDELLO: 42 kg
maximum door width 1000 mm
(door height of 2000 mm and 8 mm glass)



TURA: 70 kg
maximum door width 1200 mm
(door height of 2700 mm and 8 mm glass)



FLUTURE: 36 kg
maximum door width 900 mm
(door height of 2000 mm and 8 mm glass)

fixation

the proper screw connection

- The counter plates of our shower door hinges should be installed only onto a hard and flat surface like tiles, concrete or metall.
- It is important that the screws and dowels must be suitable for the corresponding structural situation.
- With partial area tiling in the bathroom it is absolutely necessary to pay attention so that the hinges and corner brackets are mounted using their entire surface.
- Select a drill bit that corresponds to the size of the dowels.
- Please check the height of the screw heads to make sure that the screws do not interfere with the cover plates. the screws should be made of stainless steel 304 or 316 and provide a countersink diameter of at least 10 mm and 12 mm at most.
- In order to keep the contact to the screw, use a screwdriver instead of using mechanical tightening.
- recommendation:
  Usage of countersink chipboard screws:
  TX25 - drive 6x60 A2, art no Z092VA p. 247
- We recommend two-component resin plugs for shower hinge series FLINTER, FLAMEA, and NIVELLO.

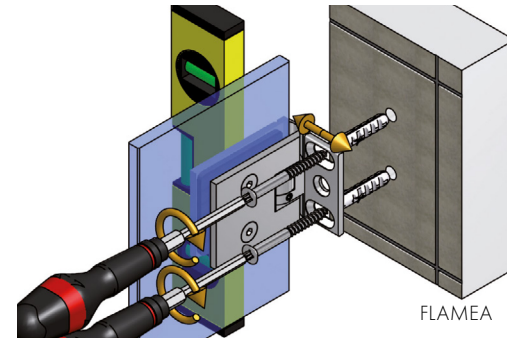
FLAMEA

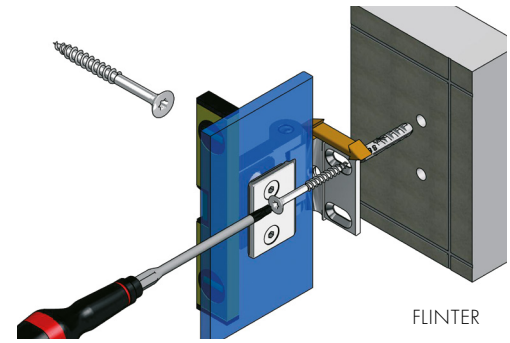
FLINTER

sealing

- Make sure that the sealing of the wall is not damaged when screwing the shower door hinges and brackets. This must be sealed again according to DIN 18534.

attention: deformation!

- The screw head is too small - the screw will be pinched and deformed into the bracket. Result is a deformation to the outside.
- The hinge may wobble on the wall as no flat grounding is secured.
- After mounting the door, take care that the wall plate does not move off the wall during opening and closing.

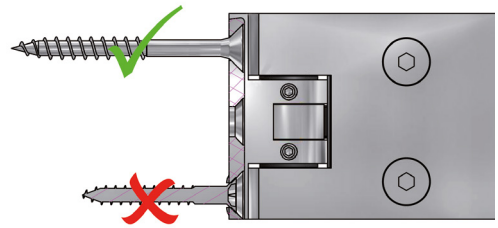

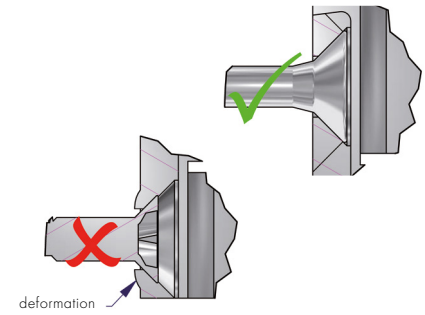

the proper screw connection

- When using FLINTER and NIVELLO Series, the supplied double eccentric applications have to be mounted according to the instructions.

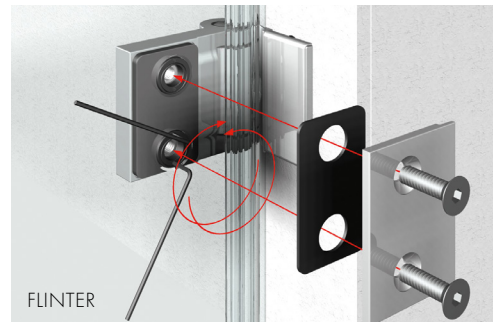
FLINTER

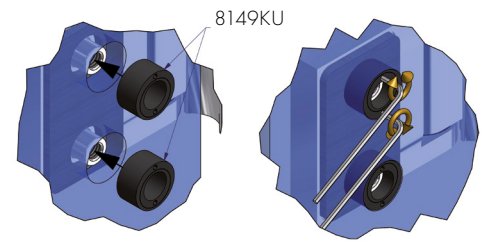

FLINTER

fixation

the proper screw connection

- Please note: when choosing our model 8152ZN (FLINTER G-W 90°), the supplied screws have to be set according to instruction manual for further fixation.
- When choosing 8481ZN/8480ZN (PILLANGO G-W 90°), the supplied screws also have to be set according to instruction manual. afterwards, you are able to adjust the closed position properly.

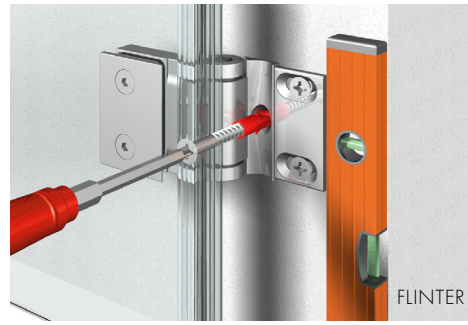

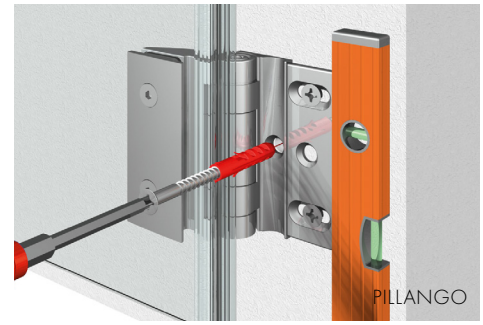

torque

- Please consider the indicated torque for the corresponding hinges. our assembly instructions can be found inside the packages and on www.pauli.de

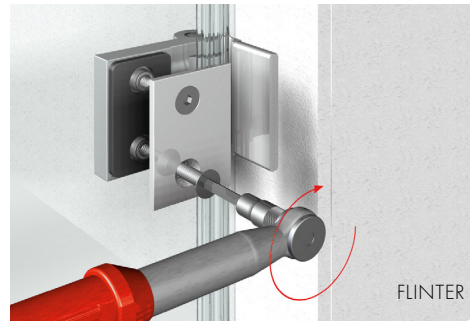

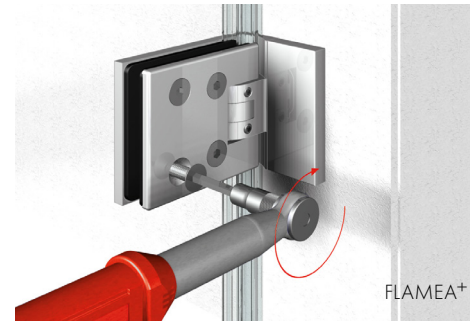

3rd mounting hole

- With our model 8900ZN (Fardello glass-wall 90°), the 3rd mounting hole prevents bending on the wall.
- The shower hinge is designed in such a way that this hole can be drilled with an 8 mm drill bit in the assembled state.





flat surfaces

- A force-fit connection with suitable material has to be established in order to guarantee permanent functionality
- When facing flat surfaces (i.e. glas or surface sealed tiles), please use our contact material (art. no.: 8877HZ - page 327)

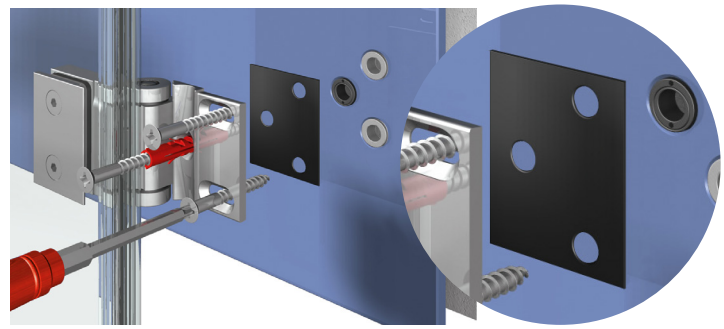

fixation

adjustment of closed position

- Some of our hinge series offer the possibility to adjust the closed position repeatedly.
- When the door panel is aligned and all sealing profiles are equipped, the closed position may be adjusted. Tighten the grub screws alternately with the indicated torque - retorque after 15 minutes.
- That ensures an exact adjustment of the closing point even on less rectangular walls. all important information can be taken from the enclosed assembly instructions

important note

- For shower door hinges with adjustable closed position or lifting/lowering function, must always be adjusted and applied.

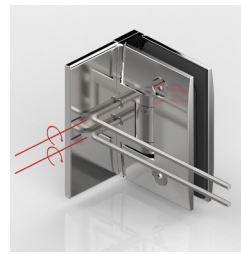
PONTERE – 8406MS

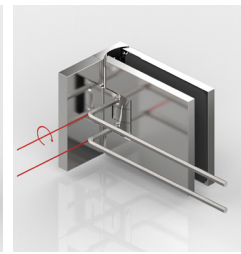
FLAMEA+ – 8130ZN

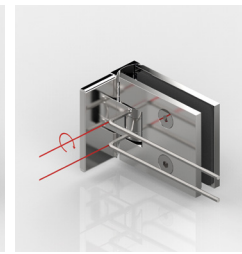
FLAMEA – 8180ZN

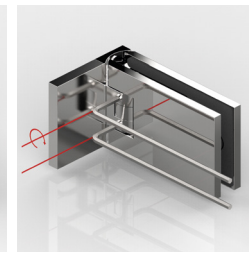
FARDELLO – 8900ZN

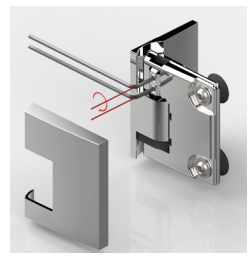
PAVONE – 8390ZN

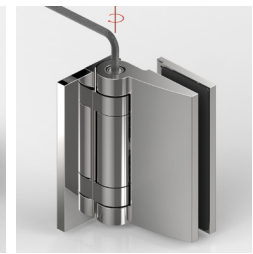
TURA – 8961ZN

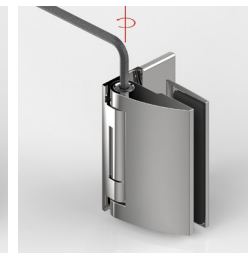
PILLANGO – 8480ZN

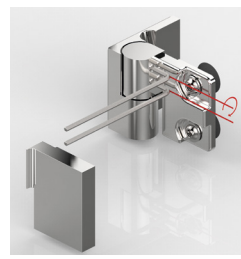
NIVELLO+ – 8368ZN

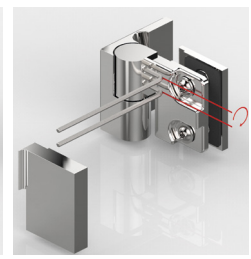
NIVELLO – 8369ZN

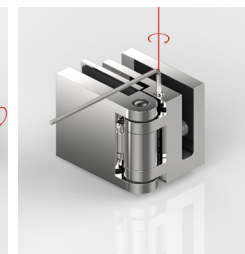
FLUTURE – 8190ZN

perpendicular installation

- The correct installation is important for factors like stability and durability. The perpendicular installation has to be respected in any case. please always take the assembly instruction into consideration.



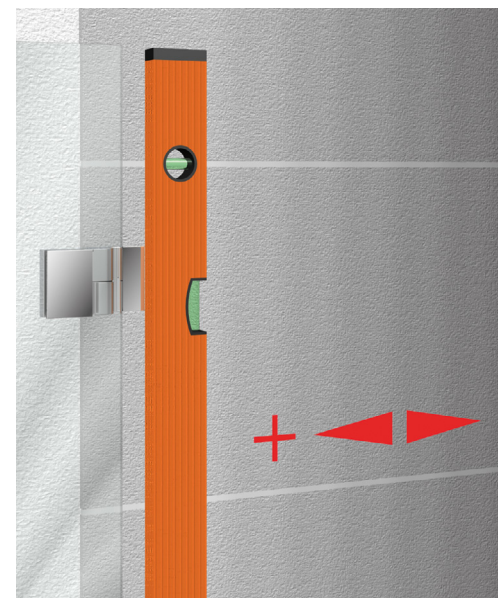

fixation

stiffening side panels

- The all-glass showers should be equipped with support bars to stiffen the side panels. Depending on the application, the number and the arrangement of the stabilizing rods can differ.
- Support bars prevent extreme bending of the glass in cases of impact.
- The support rod should be placed at the most unfavorable point in order to ideally reduce deflection of the glass panel.
- On principle, side parts which will be equipped with a door panel, have to be reinforced and stabilized. the reason is the expected deflection and bending of the side part during opening and closing of the door. Usually, the bending will be enhanced due to the already existing elastic forces. This can cause the door hinges to lose their grip and the closed positions could.
- For the stability of the shower, we recommend that you do not install the round or square support bar longer than 1200 mm.
- A shower with a railing system over a certain size, will never have the same stability as a shower with a support bar and T-adapter.
- Our application technicians will gladly advise you.

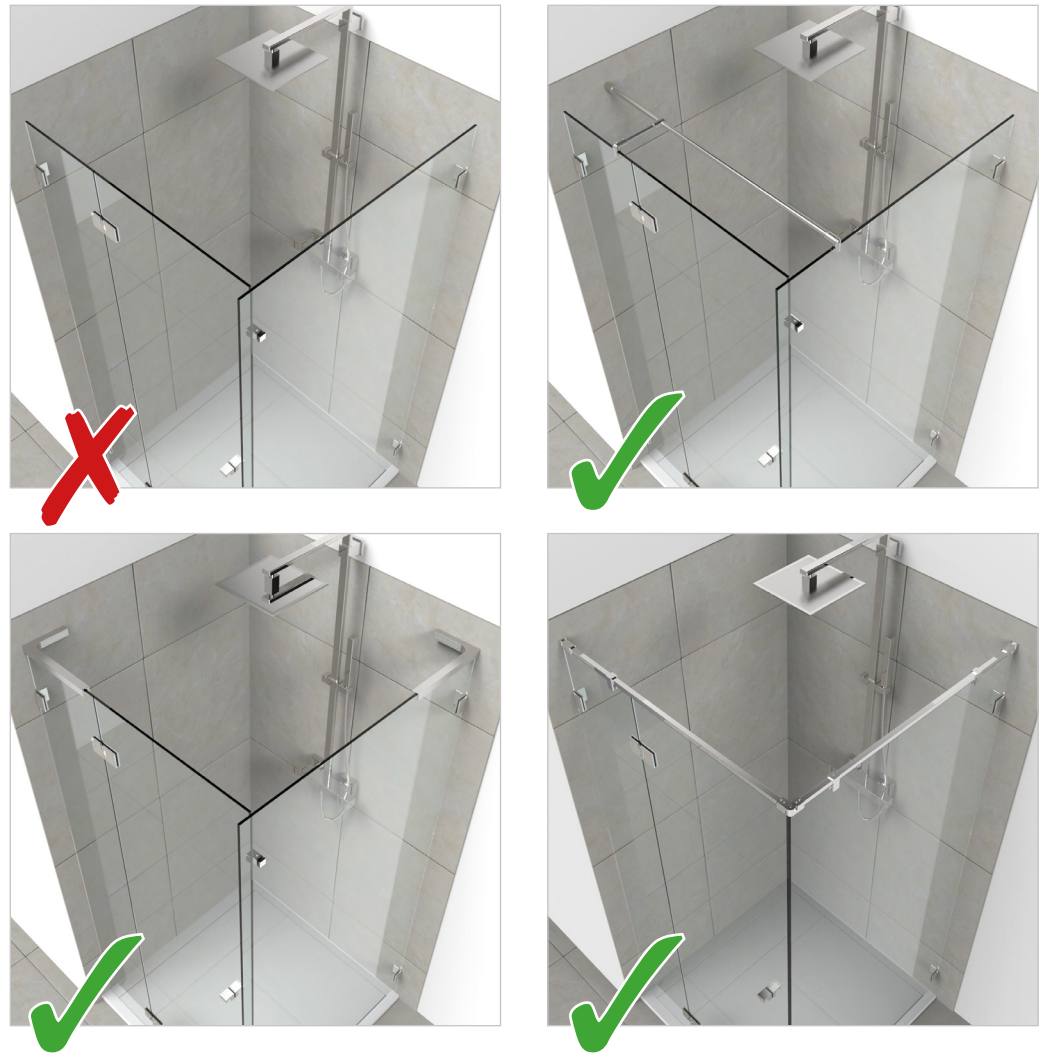

assembly aid

support block for shower doors

- Assembly aid for the spacing of 13 / 16 / 21 mm (Article No. 8840KV-PS)

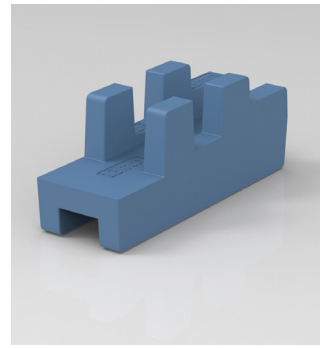

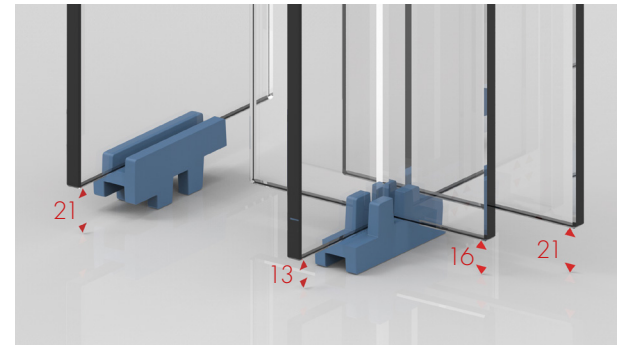

splashwater protection

Our all-glass showers are characterized by a filigree and exclusive splash-water protection. However, absolute watertightness cannot be achieved, because for example, when opening the door/doors, water residues can drip from the door surface onto the floor. In principle, water leakage with moving parts cannot be excluded. Through careful planning and the intelligent use of inconspicuous sealing profiles and splash protection systems, the escape of splash-water can be considerably reduced. If you want to do without splash protection or sealing profiles, you must expect increased water leakage. We offer many different seals and these can significantly increase the protection against splash-water. In the case of shower doors, you should always install a splash guard in the lower area to avoid increased water leakage.
Our experts can offer you various solutions - we would be glad to advise you.

- Showers without sealing profile are unsurpassed in their elegance and also very easy to clean, but splash-water can run outside more easily.



without sealing profile -
more water can escape to the outside.

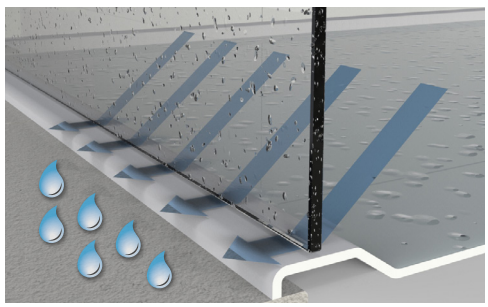

- Showers with hose-sealing profiles offer a higher watertightness and therefore less water can escape outside.



with sealing profile -
less water can escape to the outside.

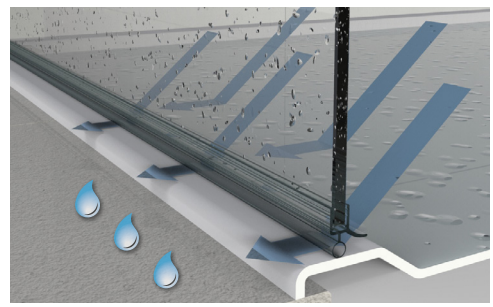

- Showers with sealing profiles and a splash guards reduce splash water to a minimum.



with sealing profile and splash guard -
hardly any water escapes to the outside.

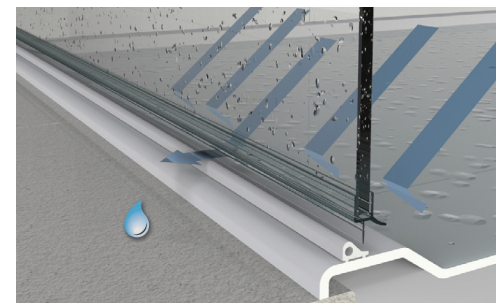

application with sealing profiles

- In order to ensure a smooth assembly process, we strongly recommend that when using PAVONE and NIVELLO the glass is CNC machined and that the assembly of the PAVONE hinges is carried out with the sealing inserts 8844KU3 before aligning the glass panel.

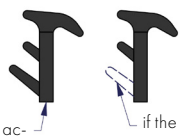

use with edge cutout according to manufacturer's specifications

if the edge cutout is smaller than the manufacturer's specification
the lower lip can be removed completely or in sections with pliers.

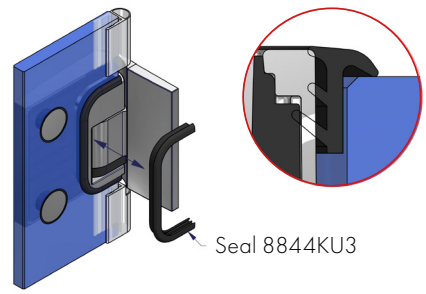

Seal 8844KU3

- To ensure long term water resistance and appearance, the seal profiles should be regularly cleaned and freed from dirt and mold!

- To ensure that splashed water can be caught and returned into the shower enclosure, the splash guard must be positioned with sufficient distance from the glass surface and silicone sealed on the inside as well as on the outside.

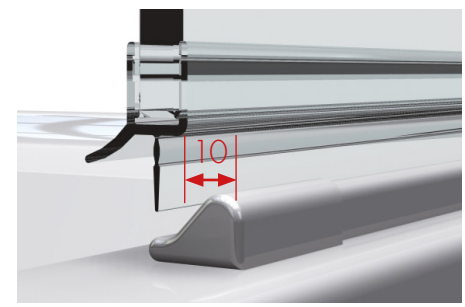

door stop limiter

protect glass and hinges against incorrect operation

- In order to protect shower-hinges and glass against incorrect operation, you have to consider that the door panels should not be pushed open over the limit (max. 90°) during planning of the shower.
- Prior to the installation, the local structural conditions have to be matched with the corresponding shower hinges in the specific installation situation.
- In order to prevent damage, a well-positioned door stopper is very useful.

products for opening limitations and door stops

- We offer different possibilities for limitations in- and outwards. please refer to page 210 and onwards.

8273ZN5 | 8490MS7-R | 8274ZN5-WL | 8499MS7 | 8489MS7-R | 8491MS7 for supporting bar 8474MS/8475MS/8477MS

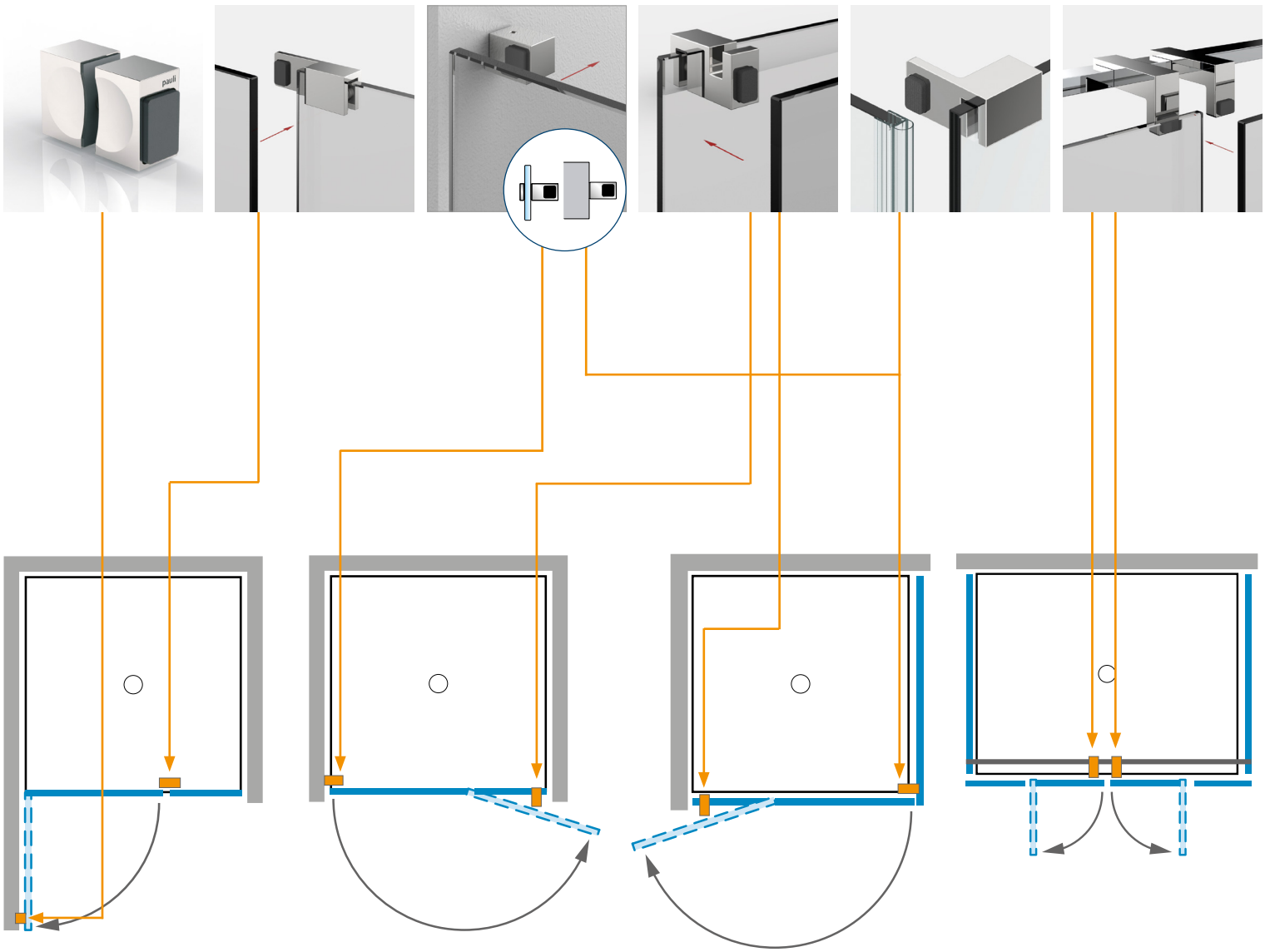

door stop limiter





proper installation of door stops to prevent over opening and undesired glass contact.

A: the door panel is opened outwards. during this usage, the opening limitation is secured in both directions but in case of panic-situations and opened door, there is no means of escape. This is very important and has to be respected especially in the public sector.

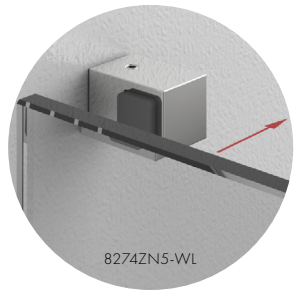

A

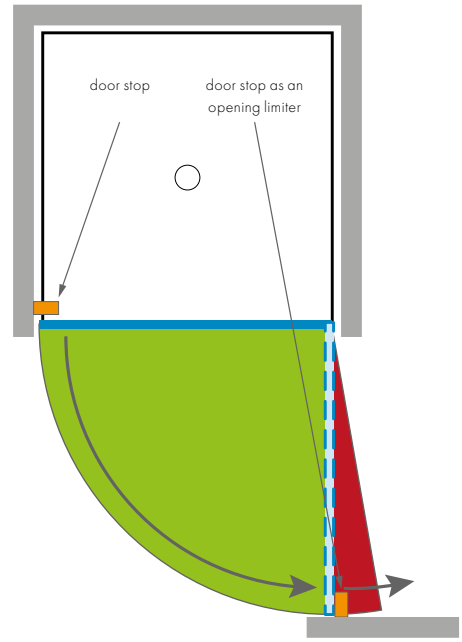

door stop limiter







proper installation of door stops to prevent over opening and undesired glass contact.

B: we suggest the possibility of a door in combination with a fixed glass side panel. the door can be opened completely. when using closing limitation inwards and door stopper outwards, glass and tiles are also protected. As the door is smaller, you are also able to pass by it in opened condition.

B

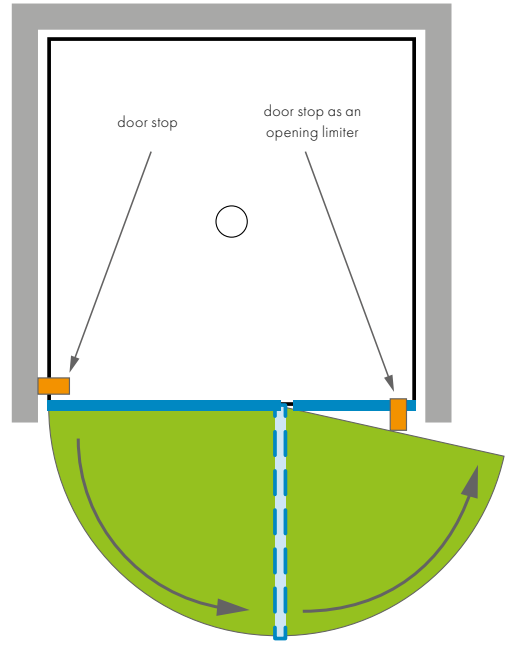

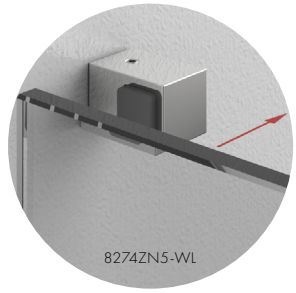

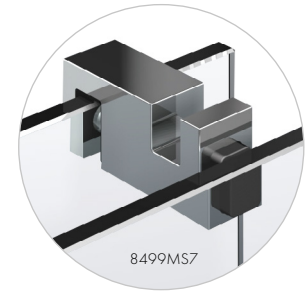

installation in general

the proper installation situation

- Not every shower hinge matches every local installation situation.
- Especially with non-aligned walls it is very important that you choose a shower hinge, which is able to compensate the inclined walls in combination with a guaranteed opening-angle of minimum 90°



- During this prior check, the selection of the mounting situation respectively the shower hinge have to be changed, if the installation situation matches better with the local structural condition and an improved opening limitation is guaranteed.
- The opening limiter has to be adapted to the particular bathroom situation. in case of any further questions, please get in touch with our application technicians!

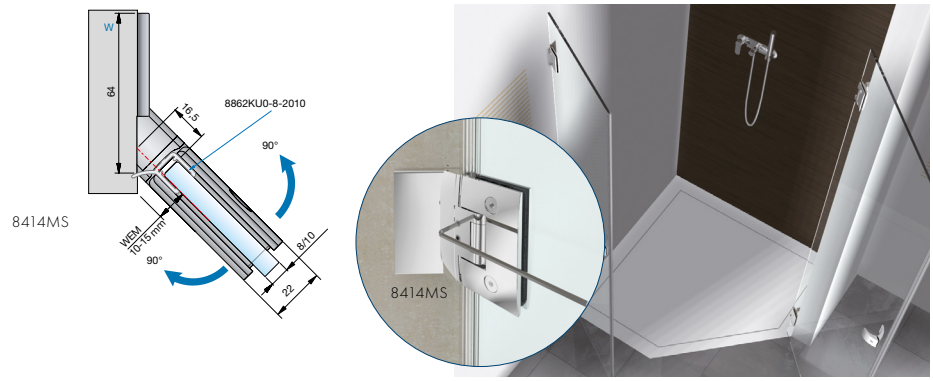

- All-glass showers should be sealed. the sealing is essential to the stability of the entire shower system. therefore it is imperitive to make a constructive seal with a triangular form instead of a "show" seal.

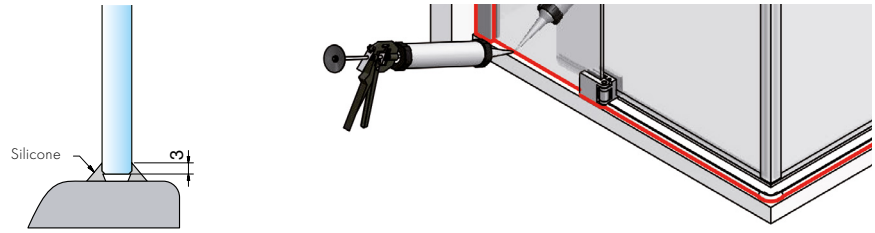

installation instructions for the use of laminated glass panels

- Due to the possible offset with laminated safety glass panels, it is essential to ensure that the counter plate is mounted centrally in the glass hole. Note: Incorrect installation can lead to glass breakage!

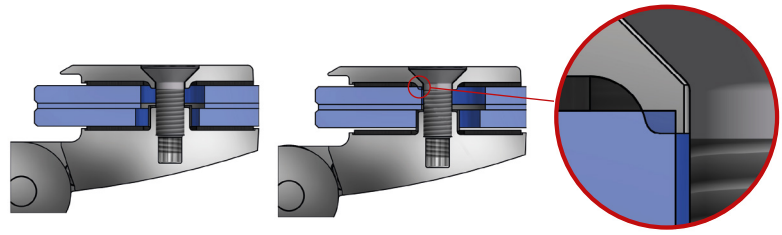

GENERAL

installation with U-profile



installation with U-profile on wall and floor

- To ensure that the water barrier in the bathroom is not damaged by subsequent drilling of the U-profile, the tiler should incorporate the U-profile and carry out the correct moisture barrier in accordance with the exposure class according to DIN 18534 and the recognized guidelines.
- If a U-profile has already been installed, we recommend having the owner certify that the sealing for the profile was carried out according to DIN 18534.

assembly with swing door hinges

what should be considered during installation!

- The pivoting point of the pendulum hinge results the cantilevering of the glass panel.
  This creates a draining edge on the outside, which must be taken into consideration during planning.
- For many pendulum hinges, you can find the dimension of the protrusion (X) in the technical drawings.

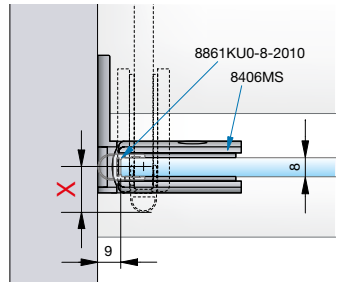

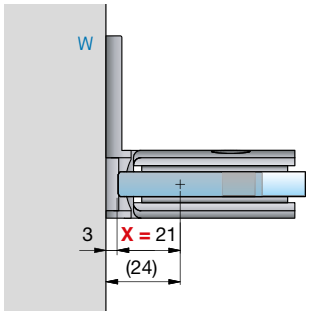

Example PONTERE 8406MS
without seal

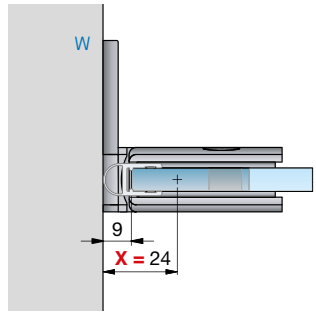

Example PONTERE 8406MS
with seal

hinge series	art.-no.	feature	with seal X	without seal X
PONTERE	8406MS	glass-wall 90°	24 mm	21 mm
	8408MS	glass-wall 90°	24 mm	21 mm
	8404MS	glass-wall 90°	30 mm	27 mm
	8412MS	glass-wall 180°	25 mm	21 mm
	8410MS	glass-glass 90°	22 mm	22 mm
	8400MS	glass-glass 180°	21 mm	18 mm
PAVONE	8390ZN	glass-wall 90°	19 mm	16 mm
	8391ZN	glass-wall 90°	19 mm	16 mm
	8392ZN	glass-glass 180°	with 8857KU0 - 28 mm	16 mm
			with 8845KU0 - 16 mm	
FLAMEA+	8130ZN	glass-wall 90°	19 mm	16 mm
	8134ZN	glass-wall 90°	19 mm	16 mm
	8132ZN	glass-glass 180°	16 mm	13 mm
	8136ZN	glass-glass 90°	20 mm	17 mm
FLAMEA	8180ZN	glass-wall 90°	15,5 mm	15,5 mm
	8182ZN	glass-glass 180°	14,5 mm	11,5 mm
FARDELLO	8900ZN	glass-wall 90°	19 mm	16 mm
	8901ZN	glass-glass 180°	15,5 mm	12,5 mm
	8902ZN	glass-glass 90°	20 mm	17 mm

assembly without sealing profiles

assembly

- The all-glass shower starts with an intelligent placement of the shower basin and the design of the floor.
- With our new innovative developments in the lifting hinge area we give you the possibility, depending on the application, to build the shower without seals.





situations with shower basins

- Due to the wedge-shaped tiling, it is possible to install a shower without a lower seal. Depending on the load class, the correct seal must be used according to the recognized directives.



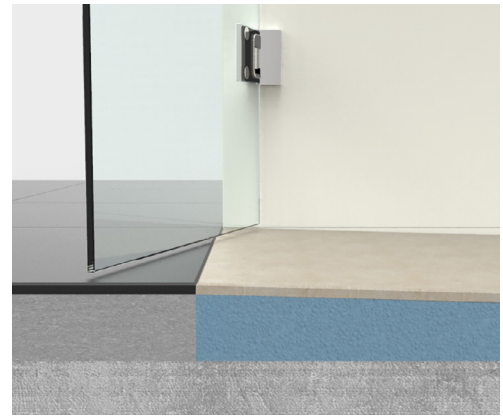

door panel on the wall

- The water on the door panel will run into the shower channel because of the floor sloping towards the wall.

assembly without sealing profiles





door panel on the wall

- Through the lowered floor and the forwarded door panel, the water on the door runs directly into the shower area.



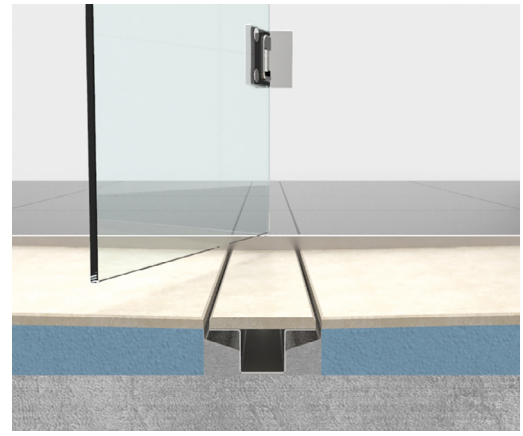

water drain on the door

- Due to the floor being lowered on both sides the splash water on the door runs directly into the drain.

up-to-date with Pauli Academy

PAULI AKADEMIE
PROGRESS THROUGH KNOWLEDGE

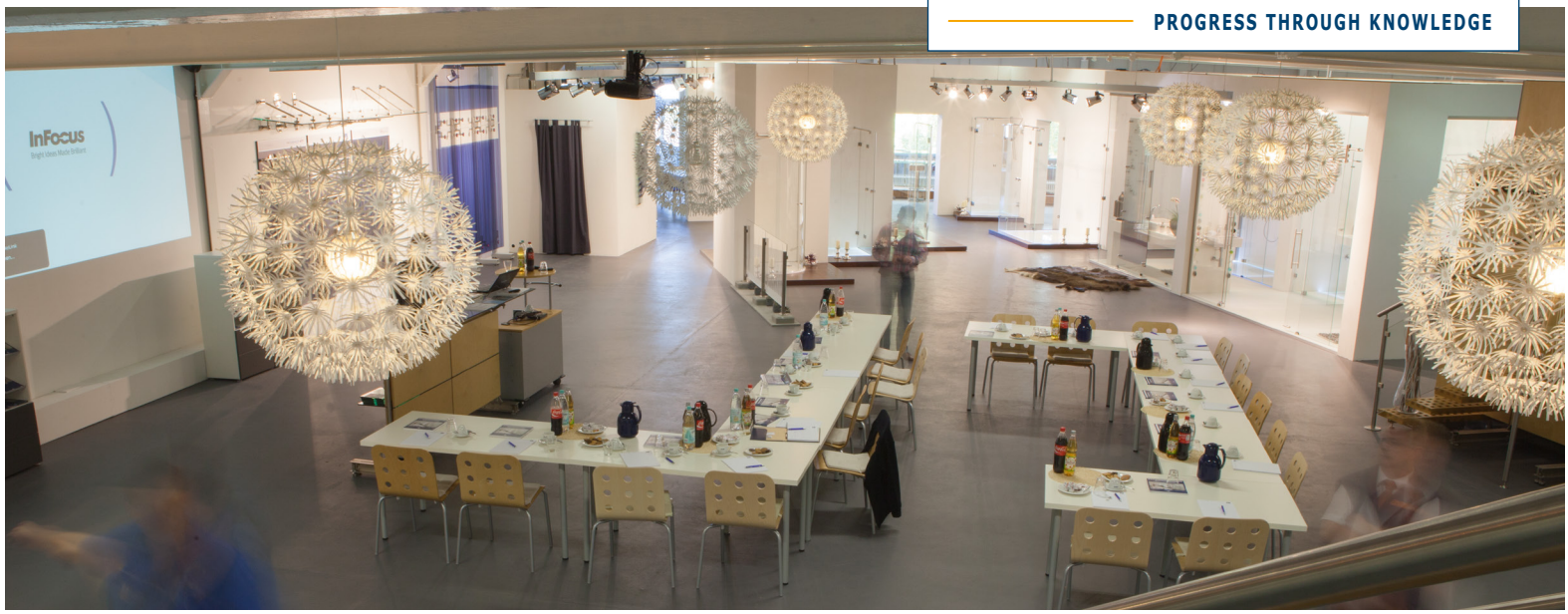

The Pauli Academy is the training Department of Pauli + Sohn which teaches relevant knowledge of the construction sector. As one of the leading manufacturers for glass hinges, Pauli + Sohn traditionally sets standards in terms of variety of products, design and safety. the training courses are tailor-made for designers, distributors and technicians.

Additionally, you are able to find lots of valuable inspirations of the Pauli + Sohn product portfolio within our training center. Due to the close collaboration of technicians and designers, our products are innovative and design-orientated at the same time. Details will be created, which cannot be missed in the future, techniques can be found which let familiar problems disappear forever. Moreover, we implement the continuous feedback of our customers in the training courses in order to improve from good to better! You can find further information about our schedule for training courses on our homepage **www.pauli.de/en**. As not every customer is near our training centres, the Pauli Academy also offers training courses at selected partners. Please get in contact with out specialists in Waldbröl!

PAULIANUM
P+S KOMPETENZ LIVE



MANNHEIMFORUM
KOMPETENZ LIVE



PAULI AKADEMIE
on Tour



our range of seminars

Benefit from our knowledge and our wealth of experience in the shower sector. Wheter workshop, basic-seminars or the shower master programm, the experts and specialists at the Pauli Academy will support you professionally and will keep you always up-to-date.

Note: seminars are currently held in the German language only.
English upon request.

current dates:

D10 – New Technical Guideline TR 24

basics, products and applications

- basics of standards and technical guidelines
- safety and stability
- glass dimensions
- assembly, sealing, fastening
- care and maintenance
- comparison of the existing DIN EN 14428 with TR 24
- Pauli all-glass shower systems in the context of the standard
- example applications

requirements: none
A certificate for the seminar will be issued.

showers: Pro - mounting/installation - seminar and Workshop

fundamentals and practical exercises

- get to know systematical basic-knowledge for measurements on site
- fundamentals and practical exercises
- proper installation
- analyze situations and learn from mistakes
- working with measurement and glas order drawings
- workshop shower installation incl. proper cut of sealing profiles

requirements: basic seminar shower or shower master level 1
a certificate will be issued for this seminar

shower master programm

multi-stage seminar programm up to the shower-professional

The owner of the certificates of the shower master programm of the Pauli Acedamy proofes that the usage of P + S shower systems has been trained comprehensively.
The shower master knows the requirements of DIN EN 14428 as appropriate legal basis and has expertise to support the customer professionally up to the installation of the product. There by the shower master is able to judge and evaluate structural conditions on site in order to find optimal solutions starting from measuring on-site up to the installation of a glass shower.



For further information to this particular training program, please refer to the next double page.



the road to the shower master

With the achievement of the shower master, the graduate is able to evaluate structural conditions on site comprehensively and realize the best solutions starting from measurement on-site up to the installation of glass shower systems. You will get in touch with the proper selection and the cut of sealing profiles as well as with the planning and creating of glass drawings by using the Pauli "shower configurator".
Due to this knowledge, quality and efficiency increase significantly during you daily business.

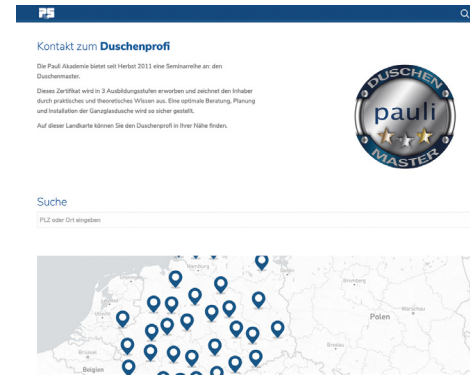

If you are qualified specialist and own the shower master, we are pleased to offer a namely mention on our homepage. Designers and architects are able to find you with the search function via zip-code as specialist for showers.





D1 - shower master level I

training content:
Teaching of systematic basic knowledge with with reference to the various properties and application possibilities.

basic Level I

- Overview and functions of shower door systems and hardware series
- Key points on stability (stiffening) and tightness
- Requirements for assembly and wall fastening
- The right choice of sealing profiles

objectives:
The seminar gives you a comprehensive overview of the P+S products of the different areas and their basic application possibilities.
Conveying systematic basic knowledge for the successful planning and design of showers.

target group:
Consultants, shower planners and installers

requirements:
none

DUSCHEN
LEVEL I
MASTER

D2 - shower master level II

training content:
Conveying consulting and technical skills, as well as planning reliability for every installation situation. Sketching and presenting individual shower solutions and present them.

basics Level II

- Practical applications
- The right choice of fittings for the constructional situation
- Determination of customer requirements, Special solutions and barrier-free shower enclosures
- Requirement of DIN 14428
- Recommendations for necessary written agreements
- What has to be considered in the hotel and contract sector?
- Complaints - learning from mistakes. Experiences analyze, process, solve.
- Workshop cutting of sealing profiles

objectives:
The seminar provides you with sound information on planning and design safety in the application of of Pauli products. It shows practical applications in different areas. A confident handling of customer requirements and complaints is taught.

target group:
Consultants, shower planners and installers

requirements:
shower master level I





D3 - shower master level III

training content:
The aim is to deepen the technical skills and craftsmanship. The focus is on the structural situation and to take it into account in the dimensions and to complete the work with a professional assembly.

basics Level III

- Simulation of a consultation
- Shower enclosures according to the structural situation and customer requirements
- Calculation and preparation of glass order drawings
- Workshop shower installation
- knowledge check
- Factory tour (only at seminar in Waldbröl)

objectives:
The seminar concludes the shower master seminar series with a well-founded practical practical part. It increases the professional competence in planning, installation and distribution of shower enclosures. Besides a knowledge check there is additionally a factory tour (for seminars in Waldbröl)

certificate:
You will be awarded the title "Shower Master", certificate and can be listed as a partner on our Website as a partner.

target group:
Consultants, shower planners and installers

requirements:
Shower Master Level I and Level II





convince with an impressive showroom



Pauli + Sohn also sets high standards concerning showroom equipment: you are able to create atmosphere and show customers multifaceted possibilities due to our decent shower modules - starting from the fitting, to the installation situation until special solutions.

Our product range does not only cover shower systems, also canopies, facades and balustrade systems are available als modules. These can be positioned in your showroom very easily and be used for an exhibition and as comprehensive presentation of Pauli + Sohn products even in small areas. We would be pleased to advise and support you during your planning and realization of your showroom - please contact us!



C32 "Trio" for your showroom





sample case and display for product samples

new shower objects for your showroom

We have developed new showroom objects for you and designed them down to the smallest detail. We offer you all of the important information and accurate construction drawings.

The total height of the shower objects can be individually adapted to the premises. Our technical department will be happy to advise you.

shower object Nr: 1

with 2 shower applicatons – size: ca. 2450/900/ height 2200mm



pos.1 niche shower consisting of:
2x lifting swing door model Pavone without side and bottom door seal
2x flush-mounted door handles

the shower tray is optimized for the installation without sealing profile.

pos.2 corner shower consisting of:
2x folding door hinges FLAMEA^{+} in combination with model FLINTER opening inwards and outwards
1x side panel with towel bar and slightly lowered floor

shower object Nr: 2

with 3 shower applicatons – size: ca. 3400/1050/ height 2750mm



pos.1 corner shower consisting of:
1x swing door hinges fittings model FLAMEA^{+}
1x door handle
2x side panels with angle connector and towel bar.
the shower floor is slightly lowered and optimized for the installation without sealing profile.

pos.2 niche shower consisting of:
2x lifting hinge for swing door Model Pavone without side and bottom door seals.
2x flush-mounted door handles.
the shower tray is optimized for the installation without sealing profiles.

pos.3 corner shower consisting of:
2x folding door panels Model FLAMEA^{+} in combination with Model FLINTER opening inwards and outwards
1x side panel with towel bar and slightly lowered floor.

shower object Nr: 3

with 3 shower applicatons – size: ca. 3400/1050/ height 2750mm



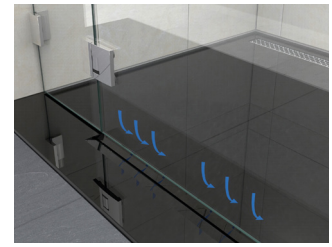





The shower floor has a bevelled edge and is optimized for installation without a sealing profile.

pos.1 corner shower consisting of:
1x swing door hinges fittings model FLAMEA^{+}
1x door handle
2x side panels with angle connector and towel bar.
the shower floor is slightly lowered and optimized for the installation without sealing profile.

pos.2 niche shower consisting of:
2x lifting hinge for swing door Model Pavone without side and bottom door seals.
2x flush-mounted door handles.
the shower tray is optimized for the installation without sealing profiles.

pos.3 corner shower consisting of:
2x folding door panels Model FLAMEA^{+} in combination with Model FLINTER opening inwards and outwards
1x side panel with towel bar and slightly lowered floor.

5 steps to your online configurated glass shower

The domain www.duschenplaner.de assists you perfectly when planning and managing an order. You will receive a bulletin concerning the latest updates fully automated via newsletter. Just follow the next steps:

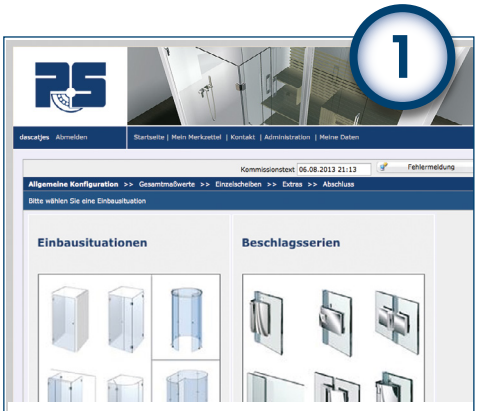

general configuration

- selection of the installation situation
- selection of the model type
- selection of the hinge
- selection of color for the hinge

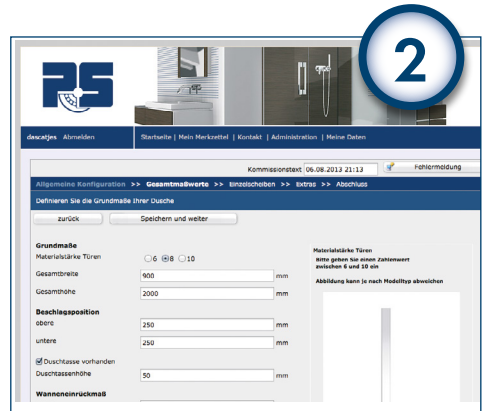

determination of total dimensions

- enter basic measurements of the shower
- determine positions of the hinges
- enter backset dimension of the shower
- possible additional functions

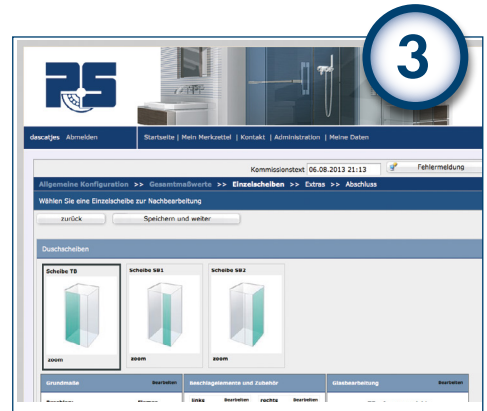

postprocessing of the single glass sheets

- configurate hinges + accessories
- glass treatment (additional drillings)



accessories (optional) for your shower

- when using large showers, possibilites of braced supporting bars



termination of the configuration process

- document/action center
- download / print the installation view, list of components, glass order drawings,
- send data via e-Mail

Note: the shower configurator is available in the German language only.

as you desire – premium surfaces and colors

Perhaps a bit different? In addition to stainless steel and chrome, we offer you a selection of attractive trend colors and surfaces for our hardware, such as gold or glossy black. Our special colors, such as copper, bronze or rose gold, are even more individual and exclusive. our insider tip against standard chrome.

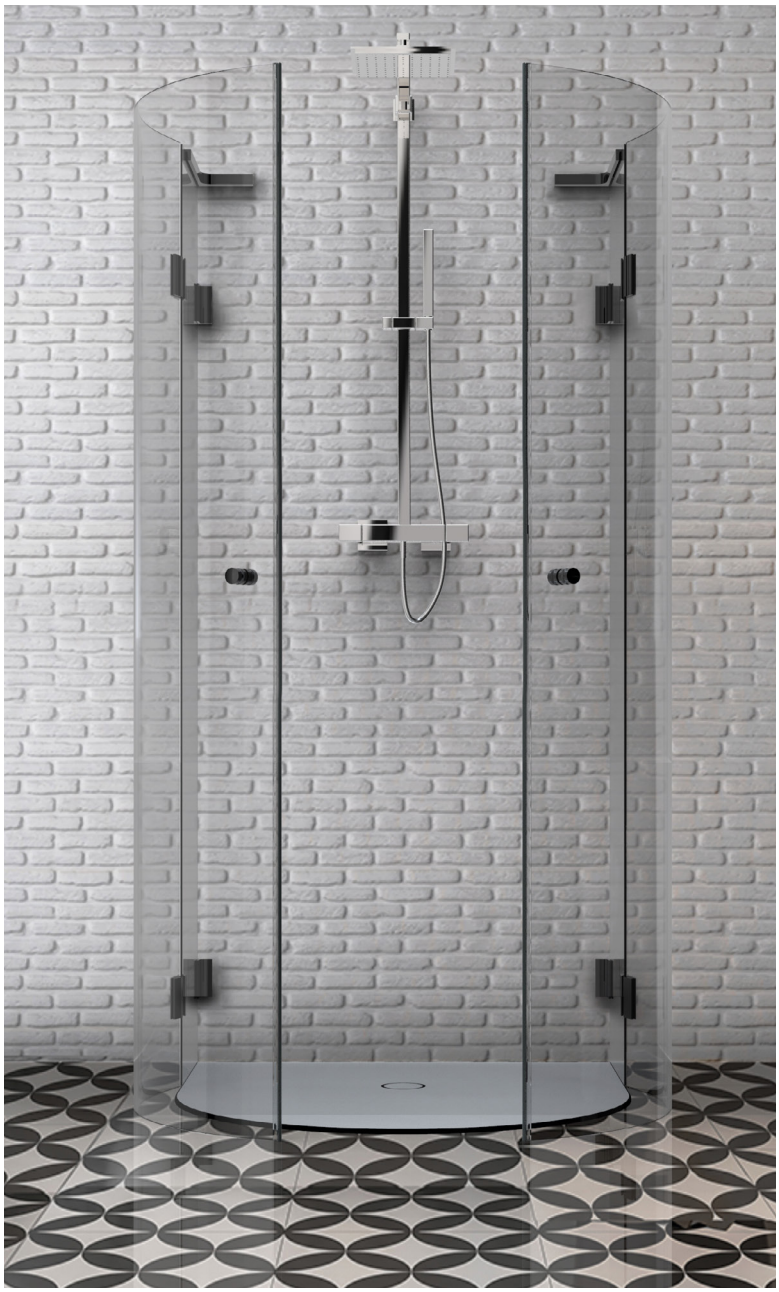

standard colors



ZN5
gloss chrome



ZN1
matt chrome



ZN10
gloss nickel



ZNPVD22
stainless steel optic



ZNPVD20
gold optic



ZNPVD35
black matt



ZN135
deep black matt

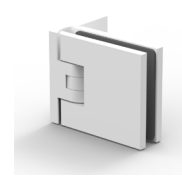

ZN134
white matt

C88 sample plate case
with all standard surface colors

special colors upon inquiry



CRG
gloss rosé gold



KBP
gloss bronze

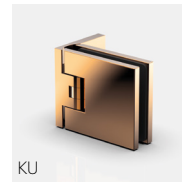

KU
gloss copper



CRB
matt rosé gold



KBR
matt bronze



GKG
matt copper

MIX
Paper | Supporting responsible forestry
FSC® C128922
www.fsc.org

Carbon neutral
Print product
ClimatePartner.com/11798-2302-1013

Pauli + Sohn

sales: Eisenstraße 2, D-51545 Waldbröl
phone: +49 (0) 22 91/92 06-0
fax: +49 (0) 22 91/92 06-681

production: Industriestraße 20, D-51597 Morsbach
phone: +49 (0) 22 94/98 03-0
fax: +49 (0) 22 94/98 03-881

www.pauli.de
pauli@pauli.de

Pauli + Sohn GmbH
all images, technical drawings and descriptions are copyrighted property of the Pauli + Sohn GmbH technical measurements within the catalog are not binding; subject to change. Any liability for printing errors which have occured during the preparatin of this brochure is excluded.

www.pauli.de

stand: March 2023

Pauli International
Member of Pauli + Sohn GmbH group

Pauli + Sohn GmbH
Eisenstraße 2
D-51545 Waldbröl
phone +49 22 91/92 06-0
fax +49 22 91/92 06-669

Industriestraße 20
D-51597 Morsbach
phone +49 22 94/98 03-0
fax +49 22 94/98 03-881

www.pauli.de
pauli@pauli.de

Pauli Scandinavia AB
Member of Pauli + Sohn GmbH group

Pauli Scandinavia AB
Fågelviksvägen 18 Hus 3
145 53 Norsborg, Sweden

www.pauliscand.se
info@pauliscand.se

phone +46 8 449 32 00
fax +46 8 449 32 01

SARL Pauli France

SARL Pauli France
1208 av du Camp de Menthe
13090 Aix-en-Provence

www.paulifrance.fr
infos@paulifrance.fr

phone +33 442 58 18 13
fax +33 442 58 27 12

Pauli + Sohn GmbH in Portugal
Rua Maria Luisa Holstein, 15, sala 23
1300-388 Lisboa, Portugal

www.pauli.pt
portugal@pauli.de

phone +351 210 968 284
fax +351 210 968 423

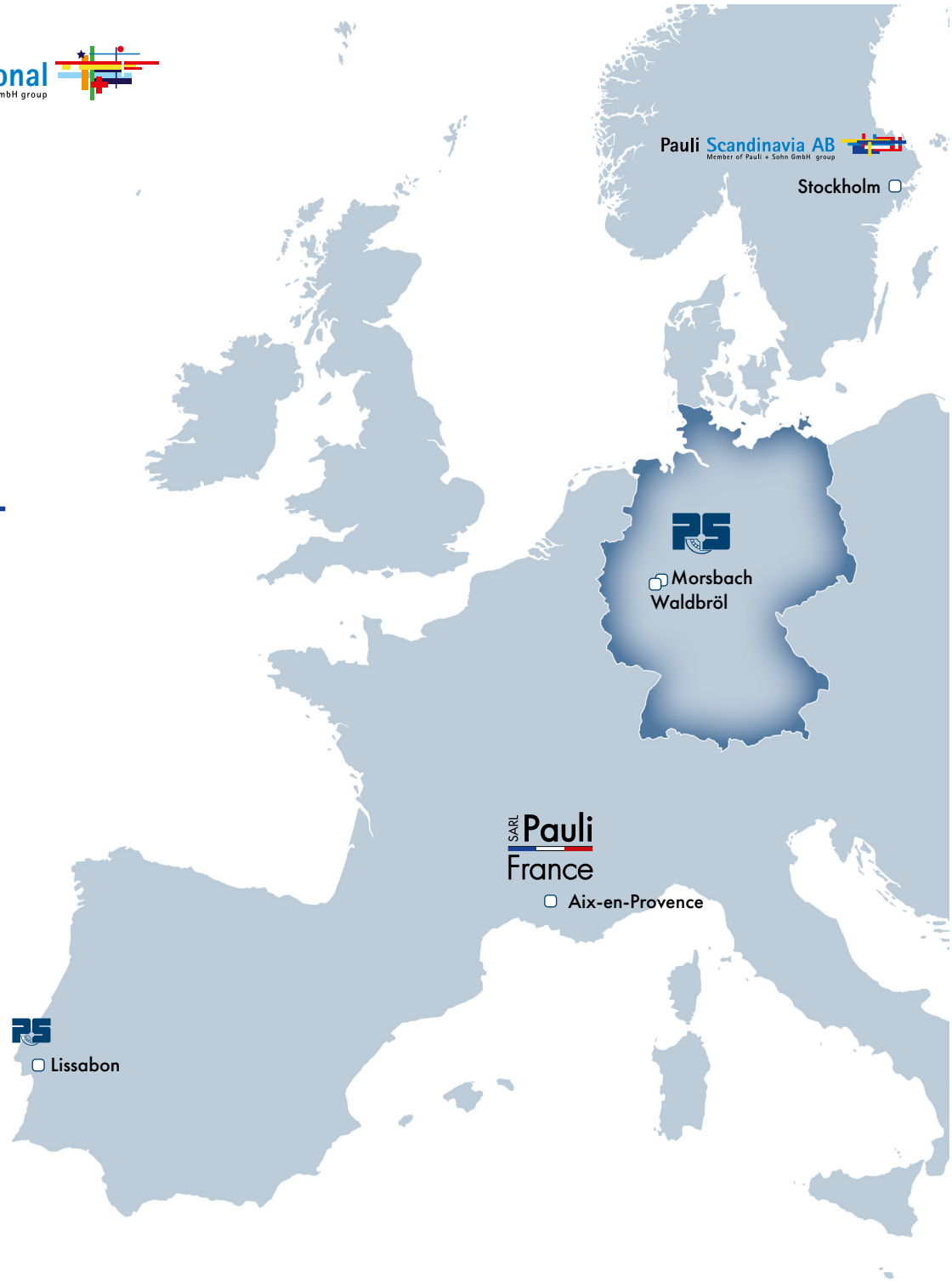

Pauli International

Member of Pauli + Sohn GmbH group

Pauli International
Eisenstraße 2
D-51545 Waldbröl
Telefon: +49 (0) 22 91–92 06–0
Fax: +49 (0) 22 91–92 06–681

www.pauli.de/en
info@pauli.de

art-no. P10.09.18 stand: March 2023